JVC

SERVICE MANUAL

MICRO COMPONENT SYSTEM

UX-D66 B/E/EN/G/GI

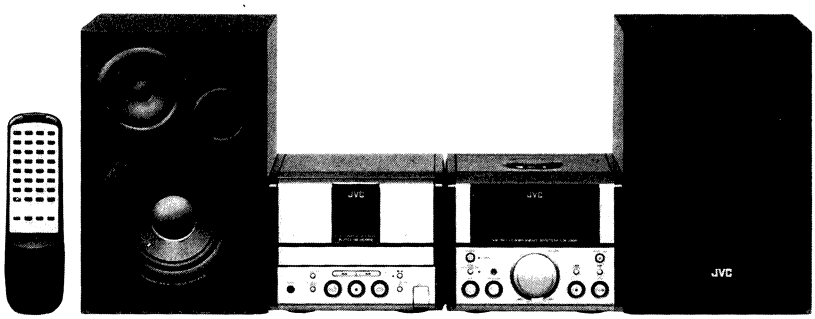

COMPACT disc DIGITAL AUDIO

Area Suffix

B ..... U.K.
E ..... Continental Europe
G ..... Germany
GI ..... Italy
EN ..... North Europe

Contents

■ Safety Precautions ..... Page 2
■ Safety Precaution about PUX – D66 4
■ Instructions 5
1. Location of Main Parts 35
2. Removal of Main Parts 40
3. Traubleshooting 49
4. Jig list 57
5. Main Adjustments 39
6. Wiring Connections 64
7. Block Diagram 66
8. Standard Schematic Diagram
■ Tuner circuit 72
■ CD amplifier/mechanism draive circuit 72
■ Cassette amplifier vircuit 73
■ Power amplifier circuit 74
■ System control circuit 75
■ Function circuit 76
9. Location of P.C. Board Parts and Parts list
■ Microprocessor/function board 77
■ Key switch board 82
■ Main board 84
■ Preamplifier board 88
■ CD amplifier board 70
■ Tuner board 94
■ Cassette mechanism board 96
10. Exploded View of Enclosure Component Parts
■ CD/Tuner section 97
■ Deck and amplifier/power supply section 100
11. Exploded View of Mechanism Component Parts
■ Cassette mechanism section 103
■ CD mechanism section 104
12. Illustration of Packing and Parts List 104

No. 1945
September 1995

www.manualscenter.com

1. Safety Precautions

1. The design this product contains special hardware and many circuits and components specially for safety purposes. For continued protection, no changes should be made to the original design unless authorized in writing by the manufacturer. Replacement parts must be identical to those used in the original circuits. Service should be performed by qualified personnel only.
2. Alterations of the design or circuitry of the product should not be made. Any design alterations of the product should not be made. Any design alterations or additions will void the manufacture's warranty and will further relieve the manufacture of responsibility for personal injury or property damage resulting therefrom.
3. Many electrical and mechanical parts in the product have special safety – related characteristics. These characteristics are often not evident from visual inspection nor can the protection afforded by them necessarily be obtained by using replacement components rated for higher voltage, wattage, etc. Replacement parts which have these special safety characteristics are identified in the parts list of service manual. Electrical components having such features are identified by shading(▭) and (⚠) on the schematic diagram and parts list in the service manual. The use of a substitute replacement which does not have the same safety characteristics as the recommended replacement part shown in the parts list of service manual may create shock, fire, or other hazards.
4. The leads in the products are routed and dressed with ties, clamps , tubings, barriers and the like to be separated from live parts, high temperature parts, mpving parts and or sharp edges for the prevention of electric shock and fire hazard. When service is required, the original lead routing and dress should be observed, and it should be confirmed that they have been returned to normal, after reassembling.
5. Leakage current check (Electrical shock hazard testing)

   After re – assembling the product, always perform an isolation check on the exposed metal parts of the product (antenna terminals, knobs, metal cabinet, screw heads, headphone jack, control shafts, etc.) to be sure the product is safe to operate without danger of electrical shock. Do not use a line isolation transformer during this check.

   • Plug the AC line cord directly into the AC outlet. using a"Leakage current tester", measure the leakage current from each exposed metal part of the cabinet, particulary any exposed metal part having a return path to the chassis, to a known good earth ground. Any leakage current must not exposeed 0.5mA AC(r.m.s.)

   • Alternate check method

   Plug the AC line cord directly into the AC outlet. Use an AC voltmeter having 1,000 ohms per volt or more sensitivity in the following manner. Connect a 1,500 ohms 10W resistor paralleled by a 0.15 μ F AC type capacitor between an exposed metal part and a known good earth ground. Measure the AC voltage across the resistor with the AC voltmeter. Move the resistor connection to each exposed metal part, particularly any exposed metal part having a return path to the chassis, and measure the AC voltage across the resistor. Now, reverse the plug in the AC outlet and repeat each measurement. Any voltage measured must not exceed 0.75V AC(r.m.s.).This corresponds to 0.5mA AC(r.m.s.).

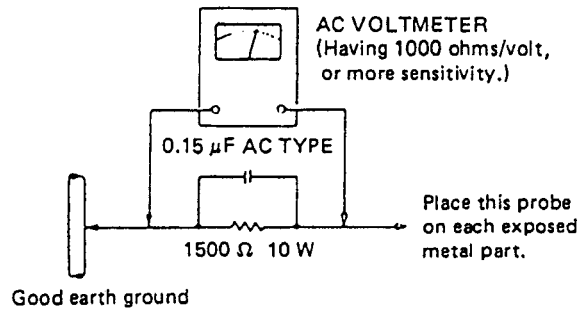

Warning (UK ONLY)

1. This equipment has been designed and manufactured to meet international safety standards.
2. It is the legal responsibility of the repairer to ensure that these safety standards are maintaintaind.
3. Repairs must be made in accordance with the relevant safety standards.
4. It is essential that safety critical components are replaced by approved parts.
5. If mains voltage selector is provided, check setting for local voltage.

IMPORTANT FOR LASER PRODUCTS

PRECAUTIONS

1. CLASS 1 LASER PRODUCT
2. **DANGER:** Invisible laser radiation when open and interlock failed or defeated. Avoid direct exposure to beam.
3. **CAUTION:** Do not open the rear cover. There are no user serviceable parts inside the unit; leave all servicing to qualified service personnel.
4. **CAUTION:** The CD player uses invisible laser radiation and is equipped with safety switches which prevent the emission of radiation when the CD holder or CD tray is open. It is dangerous to defeat the safety switches.
5. **CAUTION:** Use of controls for adjustments and the performance of procedures other than those specified herein may result in exposure to hazardous radiation.

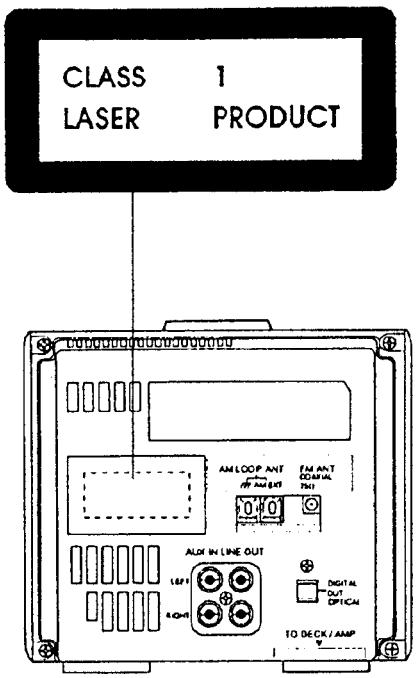

CD player/tuner section

REPRODUCTION OF LABELS AND THEIR LOCATION

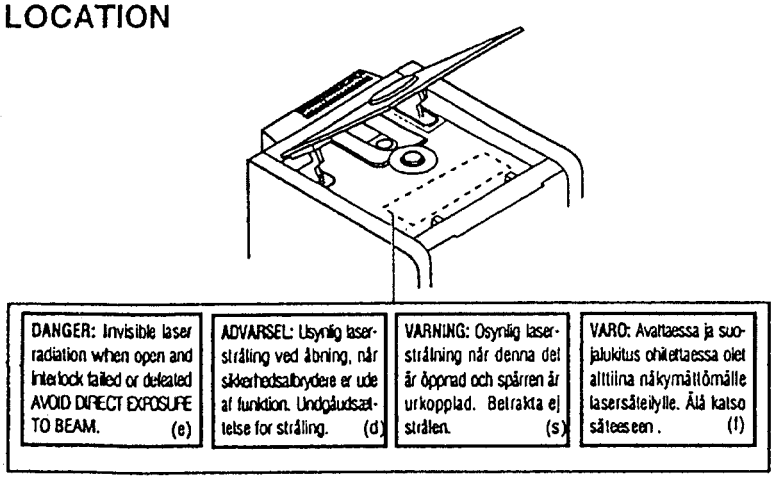

WARNING:
TO REDUCE THE RISK OF FIRE OR ELECTRIC SHOCK, DO NOT EXPOSE THIS APPLIANCE TO RAIN OR MOISTURE.

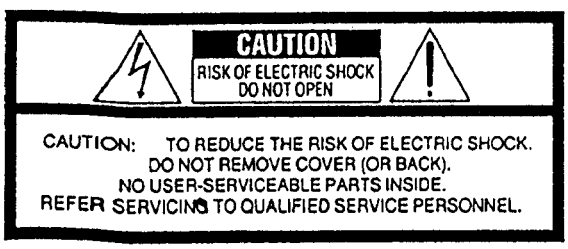

The lightning flash with arrowhead symbol, within an equilateral triangle, is intended to alert the user to the presence of uninsulated "dangerous voltage" within the product's enclosure that may be of sufficient magnitude to constitute a risk of electric shock to persons.

The exclamation point within an equilateral triangle is intended to alert the user to the presence of important operating and maintenance (servicing) instructions in the literature accompanying the appliance.

www.manualscenter.com

■ Safety precaution about UX-D66

Power supply section

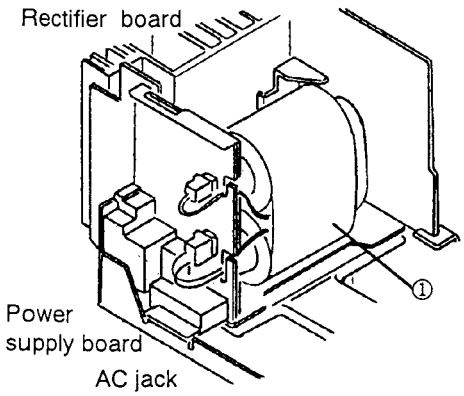

Deck section

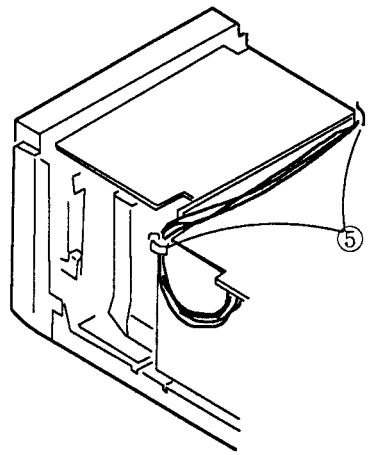

Function board

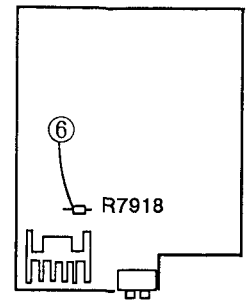

Power cord

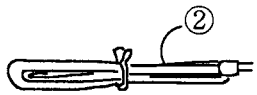

Power supply board

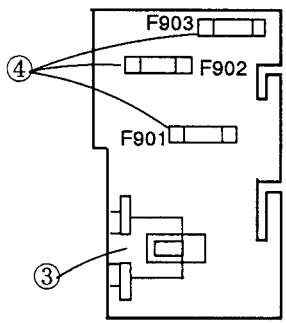

Microprocessor board

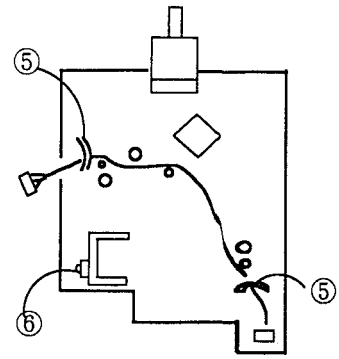

Important control points concerning safety

1. Check the power transformer marking, and check that the power transformer is securely installed.
   Parts number ; VTP09J2-12A

2. Check the power cord marking, and check that the power cord is not externally damaged.

	B version	E/G/GI/EN version
Cord mark:	BASEC BS6500	◀ VDE ▶
Attachment plug:	KP-61 ⊽ 3A	KP-419C
Connect plug:	KS-15F	KS-15F

3. Check the AC socket marking, and check that the AC socket is tightly fixed in the P.C.B. when installed.
   Marking : HSC1466

4. Check the rated fuse display, and check that the fuse is secure in the fuse holder.

Ref. No.	B/E/G/GI/EN version
F901	T630mA Ⓢ ⊽
F902	T8A (except Bversion Ⓢ)
F903	T1.6A Ⓢ ⊽

5. Check that the wires are neatly arranged so that they do not interfere with sections involving power, moving parts, heat generation, or those with sharp-edged parts.

6. The following parts are important for safety in such operations as those involved with heat generation. Use the specified parts and check original shape. Heat generating parts should be suspended above the P.C.B., not fallen down. Partsmarked with [ ] are safety control parts.
   Q304, D911, IC335, Heat sink (for Deck unit), Q7906, Heat sink (for Q7906), [Q812], [Heat sink for Q812], R309, R310, R311, R327, R7906, PL801, PL802, [R7918], R7919, R7920, R7931, R7921, R7903,

■ Instructions

CONTENTS

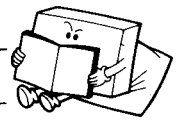

Features .....
Safety precautions.....
Handling precautions.....
Connections. .....
Power supply.....
Names of parts and their functions.....
Remote control unit . .....
Switching the power on/off .....
Volume, tone and other controls.....
Handling CDs. .....
Playing CDs.....
Handling Cassette tapes. .....
Cassette playback. .....
Radio reception . .....
Recording . .....
Clock adjustment.....
Timer operations.....
Maintenance . .....
Troubleshooting .....
Specifications .....

FEATURES

- CD-size micro component system consisting of 4 units
- Active Hyper-Bass PRO circuit for low-frequency sound reproduction
- Dynamic axial-drive woofer
- One-touch operation (COMPU PLAY)
- 36-key remote control unit operates all CD, cassette deck and tuner functions
- Multi-function CD player
- Programmed play of up to 20 tracks
- Repeat Play
- Random Play
- U-Turn auto-reverse full-logic mechanism with Dolby* B NR
- Auto tape select mechanism
- Metal (type IV) and CrO_2 (type II) tape can be played back for superior tone quality
- CrO_2 (type II) tape recording capability
- Music scan in forward or reverse direction
- 2-band digital synthesizer tuner with 30-station (15 FM and 15 AM (MW/LW)) preset capability
- Seek/manual tuning
- Auto preset tuning
- Timer/Clock function
- Timer on/off with preset volume function
- Sleep timer can be set for up to 120 minutes
- Optical digital output

* Dolby noise reduction system manufactured under license from Dolby Laboratories Licensing Corporation. "Dolby" and the double-D symbol DD are trademarks of Dolby Laboratories Licensing Corporation.

SPECIFICATIONS

CD player section

Type	:	Compact disc player
Signal detection system	:	Non-contact optical pickup
Number of channels	:	2 channels
Frequency response	:	20 Hz - 20,000 Hz
Signal-to-noise ratio	:	90 dB
Wow & flutter	:	Less than measurable limit

Radio section

Frequency range	:	FM 87.5-108 MHz AM (MW) 522-1,629 kHz (LW) 144-288 kHz
Antennas	:	Loop antenna for AM (MW/LW) External antenna terminal for FM (75 Ω)

Tape deck section

Track system	:	4-track 2-channel stereo
Motor	:	Electronic governor DC motor for capstan
Heads	:	Hard permalloy head for recording/playback, 2 gap ferrite head for erasure (Combination head)
Frequency response	:	50-15,000 Hz (with CrO_2 tape)
Wow & flutter	:	0.15% (WRMS)
Fast wind time	:	Approx. 130 sec (C-60 cassette)

Speaker Section (each unit)

Speakers (Impedance)	:	Dual-10 cm (Woofers) (6 Ω), 7 cm (Tweeter) (16 Ω)
Dimensions	:	170 (W) x 256 (H) x 267 (D) mm
Weight	:	Approx. 3.5 kg

General

Power output	:	50 W (25 W + 25 W) at 3 Ω (Max.) 40 W (20 W + 20 W) at 3 Ω (10% THD)
Input terminals	:	AUX IN (300 mV/140 kΩ)
Output terminals	:	PHONES (Output level: 0-15 mW/ch, 32 Ω, Matching impedance: 16 Ω - 1 kΩ) SPEAKER (Matching impedance 3 Ω - 16 Ω) LINE OUT (300 mV/47 kΩ) OPTICAL DIGITAL OUT
Power requirements	:	AC 230 V, 50 Hz
Power consumption	:	50 W (with POWER SW ON) 5 W (with POWER SW STANDBY)
Dimensions	:	500 (W) x 262 (H) x 267 (D) mm, including knobs
Weight	:	Approx. 11.3 kg
Accessories provided	:	Power cord x 1 Remote control unit (RM-RXUD66) x 1 "R6/AA (15F)" batteries x 2 (for the remote control) FM feeder antenna x 1 Loop antenna stand x 1 Antenna adapter x 1 Speaker cord x 2

Design and specifications are subject to change without notice.

www.manualscenter.com

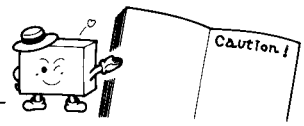

SAFETY PRECAUTIONS

Prevention of Electric Shocks, Fire Hazards and Damage

1. Even when the POWER button is set to STANDBY, a very small current will flow. To save power and for safety when not using the unit for an extended period of time, disconnect the power cord from the household AC outlet.
2. Do not handle the power cord with wet hands.
3. When unplugging from the wall outlet, always grasp and pull the plug, not the power cord.
4. Consult your nearest dealer when damage, disconnection, or contact failure affects the cord.
5. Do not bend the cord severely, or pull or twist it.
6. Do not modify the power cord in any manner.
7. To avoid accidents, do not remove screws to disassemble the unit and do not touch anything inside the unit.
8. Do not insert any metallic objects into the unit.
9. Unplug the power cord when there is a possibility of lightning.
10. If water gets inside the unit, unplug the power cord from the outlet and consult your dealer.
11. Do not block the unit's ventilation holes that allow heat to escape.
    Do not install the unit in a badly ventilated place.
12. Since this unit uses a motor-driven CD holder or CD tray, make sure that your hand or other object does not obstruct holder or tray movement.

POWER button
When the power cord is connected to a household AC outlet, the power indicator lights in red indicating the STANDBY mode. When the POWER button is pressed, the power indicator goes out and the display window lights.

When this unit is plugged into an AC outlet, it consumes a small current to operate the remote control and timer, or to back up the memory of the microprocessor, even when the POWER button is set to STANDBY.

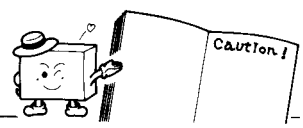

HANDLING PRECAUTIONS

Do not use this unit in direct sunlight where it would be exposed to high temperatures above 40°C (104°F).

1. **Avoid installing in the following places**
   - Where it could be subject to vibrations.
   - Where it is excessively humid, such as in a bathroom.
   - Where it could be magnetized by a magnet or speaker.
2. **Pay attention to dust**
   Be sure to close the CD holder or CD tray so that dust does not collect on the lens. Do not touch the lens.
3. **Condensation**
   In the following cases, condensation may occur in the unit, in which case the unit may not operate correctly.
   - In a room where a heater has just been switched on.
   - In a place where there is smoke or high humidity.
   - When the unit is moved directly from a cold to a warm room.

   In these cases, set the POWER button to ON and wait 1 or 2 hours before use.
4. **Volume setting**
   CDs produce very little noise compared with analog sources. If the volume level is adjusted for these sources, the speakers may be damaged by the sudden increase of output level. Therefore, lower the volume before operation and adjust it as required during play.
5. **Safety mechanism**
   This unit incorporates a safety interlock mechanism which switches the laser beam on and off, so that when the CD holder or CD tray is open, the laser beam stops automatically.
6. **Do not place cassette tapes, etc. near the speakers**
   Since there are magnets in the speakers, do not place tapes or magnetic cards on them as recorded data could be erased.
7. **Keep this unit away from your TV**
   When this unit is used near a TV, the TV picture could be distorted. If this happens, move this unit away from the TV. If this does not correct the situation, avoid using this unit when the TV is turned on.
8. **Cleaning the cabinet**
   If the cabinet gets dirty, wipe it with a soft, dry cloth. Never use benzine or thinner as these could damage the surface finish.
9. **When listening with headphones**
   - Do not listen at high volumes as this could damage your hearing.

CONNECTIONS

- Do not switch the power on until all connections are completed.

- Keep the loop antenna away from the rear panel of the unit and install it so that the best reception is obtained. (Do not leave the antenna wire in a bundle.)

Antenna connection and adjustment

- AM (MW/LW) loop antenna adjustment

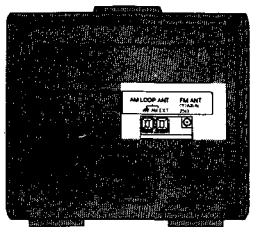

CD player/tuner section

AM (MW/LW) loop antenna

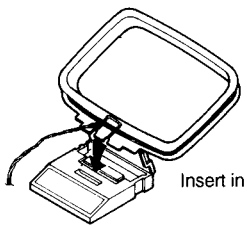

Insert in the direction of the arrow.

AM (MW/LW) loop antenna

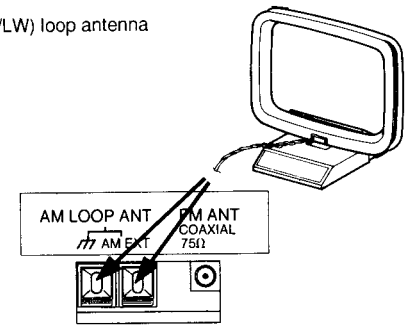

- FM antenna connections and adjustments

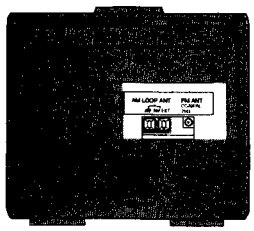

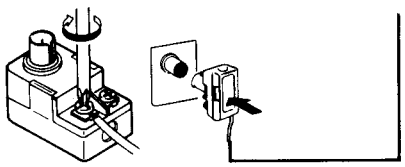

FM feeder antenna (provided)

- The provided antenna adaptor is designed for a 75 Ω antenna cable. When a 300 Ω antenna cable is used, a 300 to 75 Ω conversion adaptor available from an audio store is required.

- Use an outdoor antenna when stable reception cannot be obtained with the provided antenna.

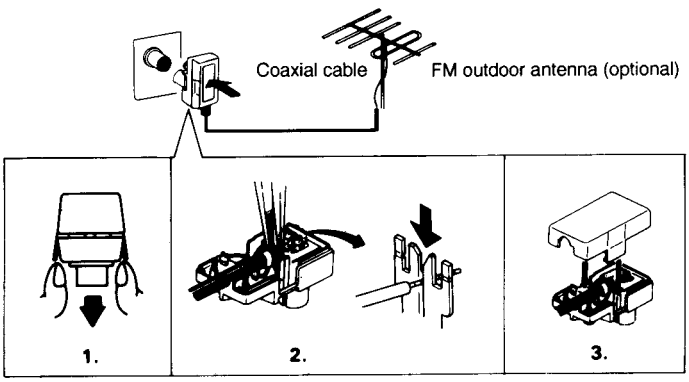

Notes:
- Do not place the loop antenna on a metal desk or near a TV or personal computer.
- Installing an outdoor antenna requires expertise; we recommend that you consult an audio dealer.
- Install the antenna cord away from the power and speaker cords as these could generate noise. Do not install the loop antenna so that it touches the rear of the unit.

www.manualscenter.com

Speaker cord connection

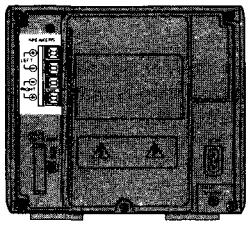

Deck/amp unit

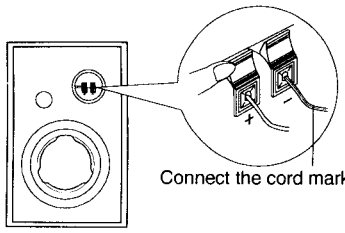

Connect the cord marked with a white line to the ⊖ terminal.

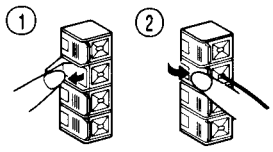

Connect the cord marked with a white line to the ⊖ terminal.

Marked with a line

- Connect the cord from the speaker on the left to the (LEFT) terminals and the cord from the speaker on the right to the (RIGHT) terminals.

Right speaker (rear side)

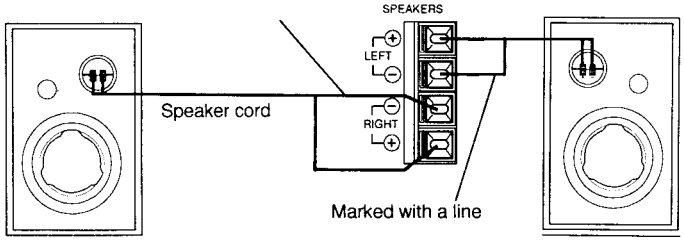

Left speaker (rear side)

- The speaker grilles can be removed.
  - When removing (the example shows the left speaker).
  1. Insert your fingers at the top and pull towards you.
  2. Also pull the bottom towards you.

- Attaching the speaker grille

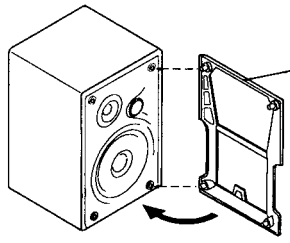

Speaker grille

Left speaker

Match the fittings when attaching the grille.

Notes:

- The polarity of the two connected speakers will be the same if the speaker cords marked with a white line are connected to the ⊖ terminals. If the speakers are connected with polarities reversed, stereo effect and tone will be degraded.
- The speakers of this unit are not magnetically shielded. When they are placed directly on or adjacent to a TV, the TV's picture could be distorted. Install the speakers more than 10 cm away from your TV.
- If the speakers are to be placed away from the main unit, purchase optional speaker cords from an audio store.
- When connecting the speaker cord make sure that the wire core, not the insulating cover, is connected to the speaker terminal. Otherwise, sound cannot be heard.

System connection

- Connect the flat cable connected to the CD/tuner unit to the deck/amp unit.

Deck/amp unit

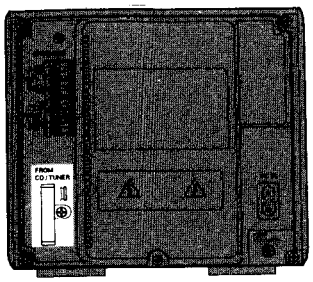

- When connecting

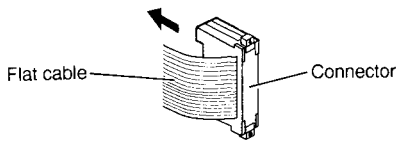

- When disconnecting

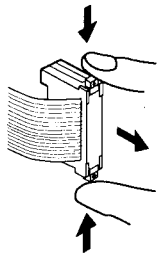

CAUTION:
To prevent malfunction, connect the grounding wire to the ground terminal as shown.

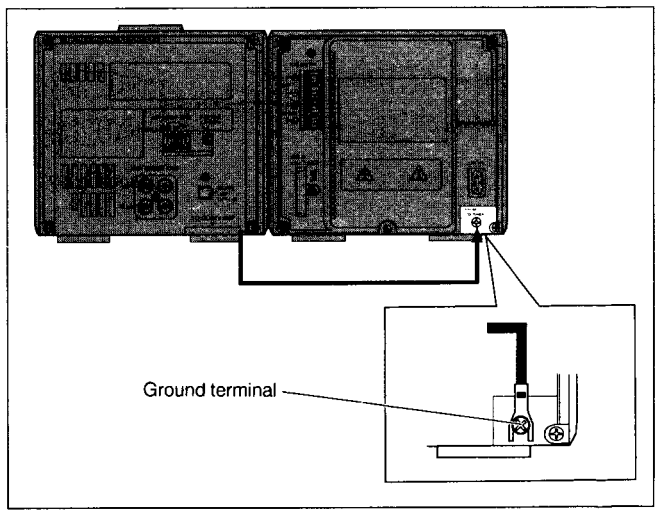

Connection of external audio units

- **Connection with a turntable (or MD player)**

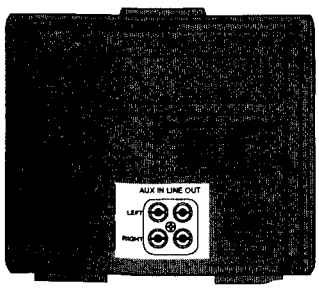

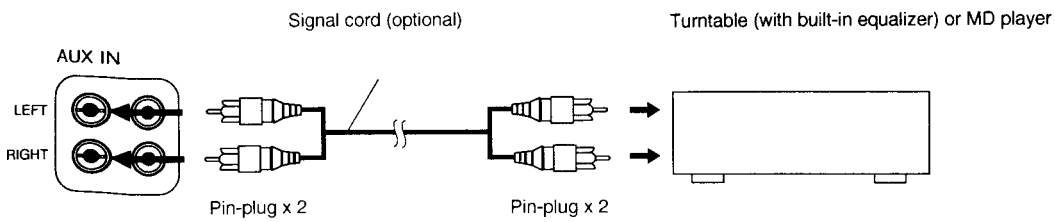

www.manualscenter.com

- **Connection with an MD recorder, etc. (analog output)**
  When recording from this unit's CD player, cassette deck or radio to an external MD recorder, etc., connect the cord from this unit's line out terminals to the analog input terminals of the MD recorder, etc.

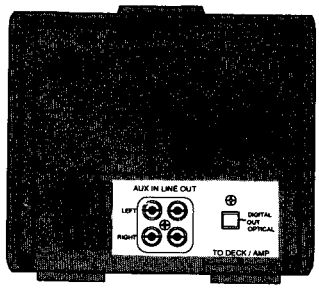

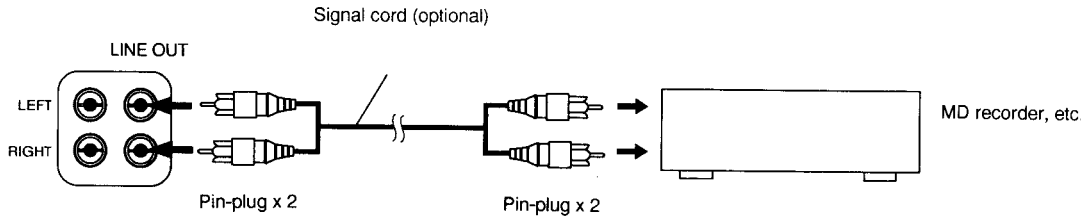

- **Connection with an MD recorder, etc. (digital output)**
  It is possible to transmit a digital sound signal from the CD player of this unit directly to an external MD recorder, etc. that is equipped with an optical input terminal. In this case, connect the cord from this unit's CD optical digital output terminal to the optical input terminal of the MD recorder, etc.
- An optical digital cord (optional) is required to make this connection. Refer to the instruction manual of the MD recorder, etc. for details.

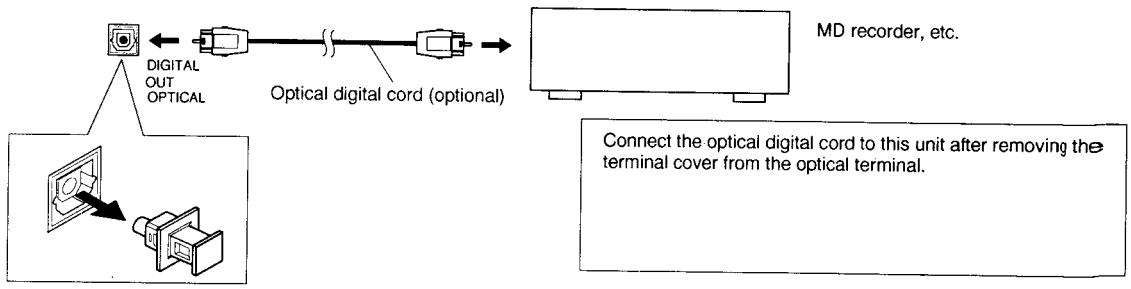

POWER SUPPLY

Connection of AC power cord

- Connect the AC power cord after all other connections have been made.

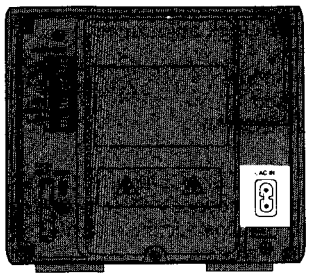

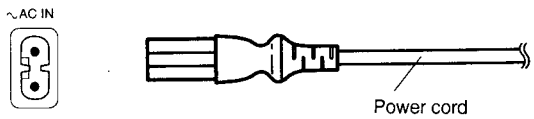

CAUTIONS:

1. **ONLY USE WITH JVC POWER CORD PROVIDED WITH THIS UNIT TO AVOID MALFUNCTION OR DAMAGE TO THE UNIT.**
2. **BE SURE TO UNPLUG THE POWER CORD FROM THE OUTLET WHEN GOING OUT OR WHEN THE UNIT IS NOT IN USE FOR AN EXTENDED PERIOD OF TIME.**

Note:

- When there is a power failure or the AC power cord is disconnected, the timer/clock setting is erased from memory. Reset the clock when the power supply is restored.

NAMES OF PARTS AND THEIR FUNCTIONS

CD player/General section

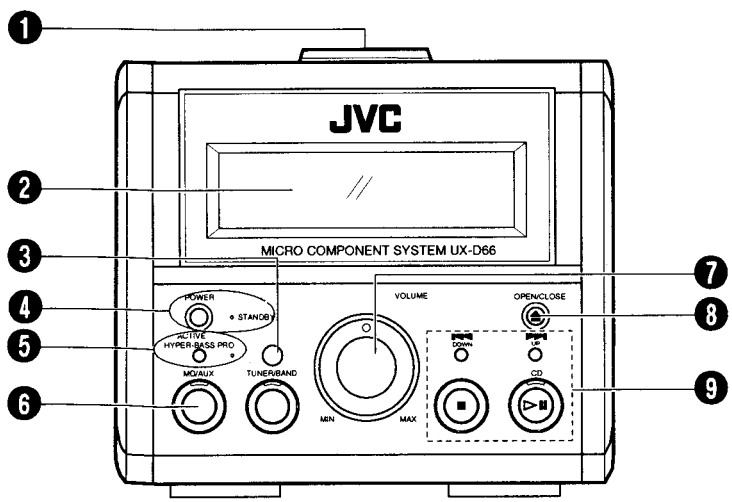

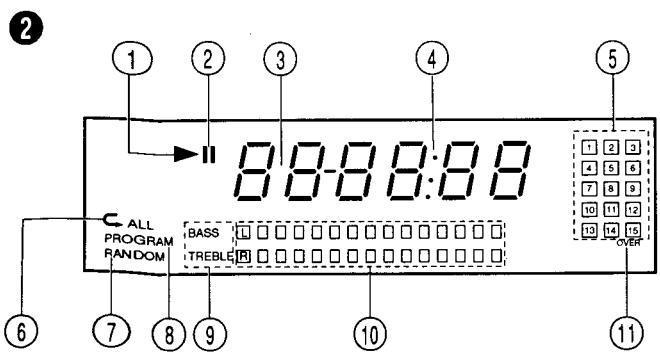

❶ CD holder
❷ Display window
① Playback indicator (►)
② Pause indicator (❚❚)
③ Function/Track number display
④ Play time display
⑤ Music calender display
⑥ Repeat play indicator (⊂ ALL)
⑦ RANDOM play indicator
⑧ Program mode indicator (PROGRAM)
⑨ BASS/TREBLE indicators
⑩ Level indicators
⑪ OVER indicator
❸ REMOTE SENSOR section
❹ POWER button and power STANDBY indicator
❺ ACTIVE HYPER-BASS PRO button and indicator
❻ MD/AUX button
❼ VOLUME control knob and indicator
❽ CD holder (▲) OPEN/CLOSE button
❾ CD operation buttons
Stop/clear button (■):
Press to stop playing a CD or cancel programmed play.
This also sets the CD mode.
Play/pause button (▷❚❚):
Press to play a CD or to stop temporarily.
CD SEARCH buttons (|◄◄, ►►|):
Press to locate the beginning of a track and to start forward/reverse search operations.

www.manualscenter.com

Tuner/Deck section

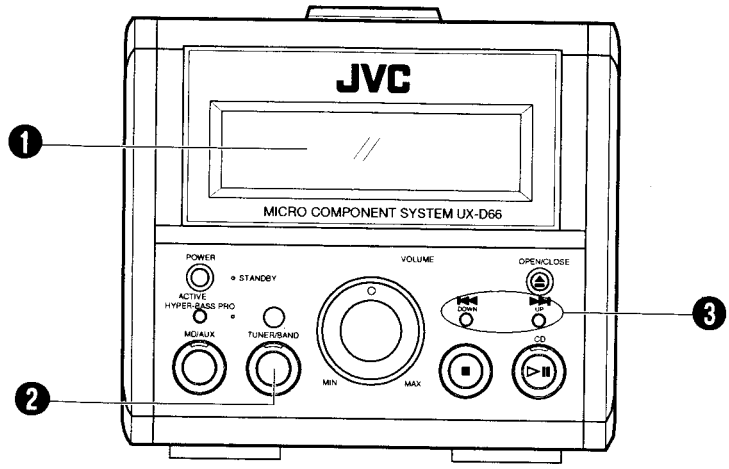

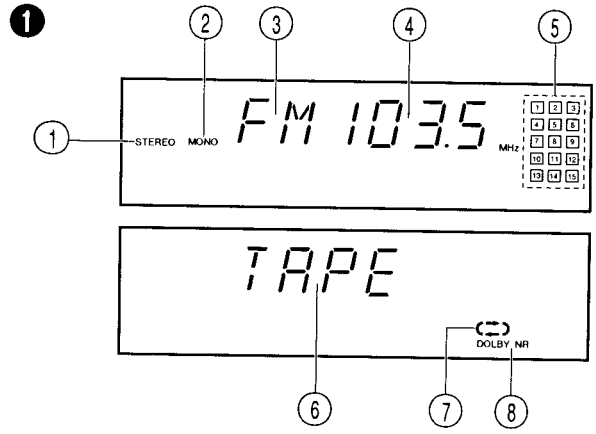

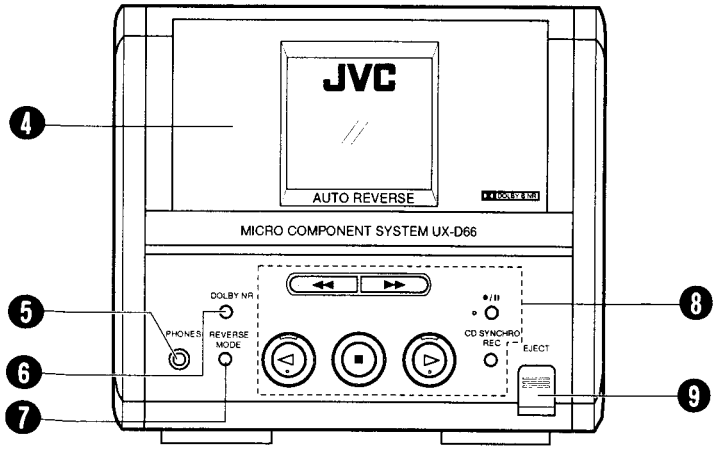

❶ Display window
① STEREO indicator
② MONO indicator
③ Band indicator
④ Radio frequency display
⑤ Preset station display
⑥ Tape (TAPE) mode display
⑦ Reverse mode indicator (⇄ / ⇄ / ⟲)
⑧ DOLBY B NR indicator (DOLBY NR)
• **See page 39 for the clock adjustment.**

❷ TUNER/BAND button
Press to select tuner mode.
Press to select the band.

❸ TUNING buttons (UP/DOWN)

❹ Cassette holder

❺ Headphones jack (PHONES) (3.5 mm dia. stereo mini)
Connect headphones (impedance 16 Ω to 1 kΩ) to this jack. Speaker sound is automatically switched off when the headphones are connected.

❻ DOLBY NR button
Set to ON when recording or playing back tapes using the noise reduction system.

❼ REVERSE MODE switch
⇄ : For single-side recording or playback
⇄ : For recording or playback on both sides
⟲ : For continuous play

❽ Cassette operation buttons
◀◀: Press to fast wind the tape from right to left or to start Music scan.
▶▶: Press to fast wind the tape from left to right or to start Music scan.
◁: Press to play back the tape in the reverse direction.
■: Press to stop the tape.
This also sets the TAPE mode.
▷: Press to play back the tape in the forward direction.
●/II: Press to set the unit to the record or record-pause mode.
SYNCHRO REC: Press to start CD synchro recording.

❾ EJECT button

REMOTE CONTROL UNIT

Preparation before use

- **Installing batteries in the remote control unit**

1. Remove the battery cover from the back of the remote control unit.
2. Insert two "R6/AA (15F)" size batteries.
   - Insert the batteries with the ⊕ and ⊖ terminals matching the indication inside the battery compartment.
3. Replace the cover.

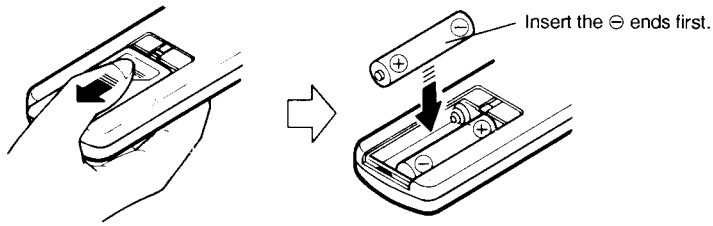

- **Battery replacement**
  When the remote control operation becomes unstable or the distance from which remote control is possible decreases, replace the batteries.

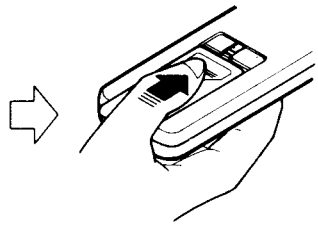

Using the remote control unit

- Point at the REMOTE SENSOR and operate within about 7 m (approx. 23 ft).
- The remote control range is less when the unit is used at an angle.
- Do not expose the REMOTE SENSOR to strong direct sunlight or artificial lighting.
- Make sure that there are no obstacles between the REMOTE SENSOR and the unit.

The following operations can be performed using the remote control unit.

- **Check the operation button functions carefully and operate them correctly.**

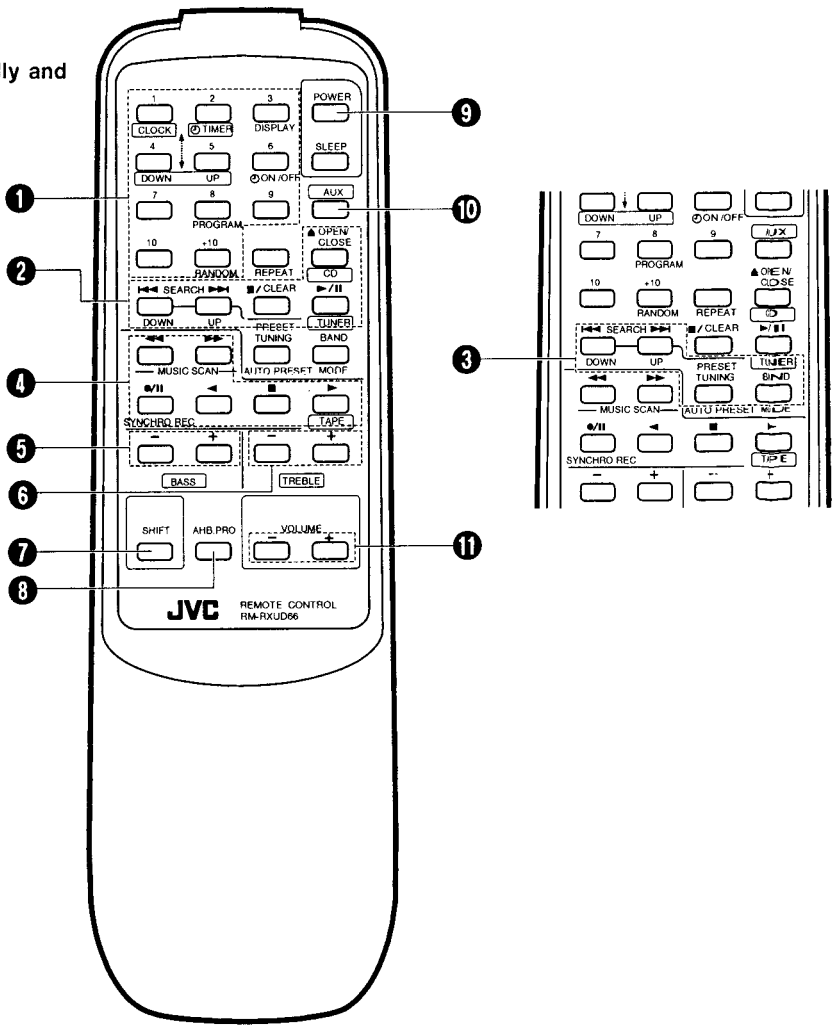

Press the following buttons while holding down the SHIFT button.
Presione los siguientes botones mientras mantiene presionado el botón SHIFT.
Premere i seguenti tasti tenendo premuto il tasto SHIFT.

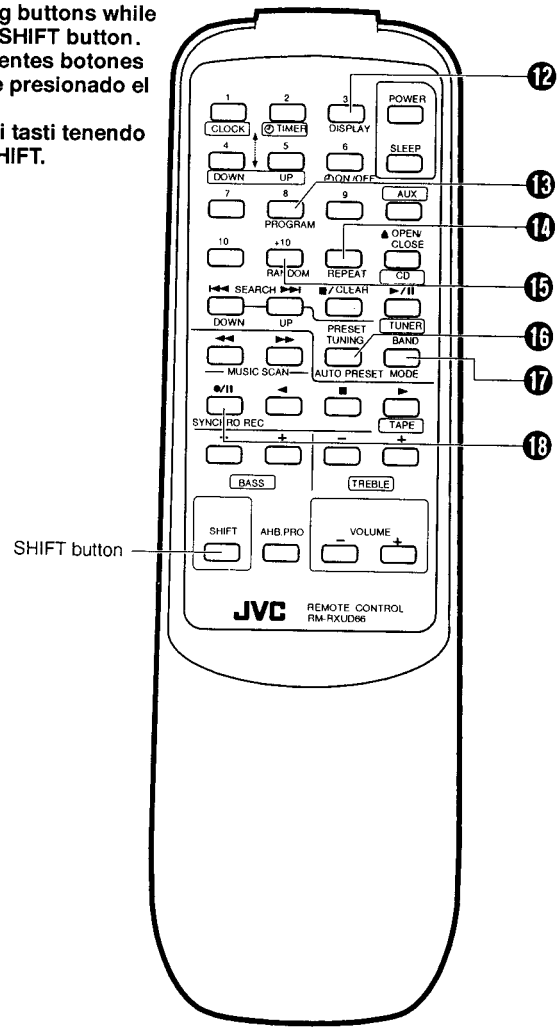

❶ Track number buttons (No. 1 to No. 10, +10)
Preset station buttons (No. 1 to No. 10, +10)
❷ CD operation buttons
CD holder (⏏) OPEN/CLOSE button
Play/pause button (►/❚❚):
Press to play a CD or to stop temporarily.
Stop (■)/CLEAR button
SEARCH (|◄◄, ►►|) buttons
❸ Radio operation buttons
UP and DOWN buttons
PRESET TUNING button
TUNER/BAND button
Press to select tuner mode.
Press to select the band.
❹ Cassette operation buttons
◄◄: Press to fast wind the tape from right to left or to start Music scan.
►►: Press to fast wind the tape from left to right or to start Music scan.
●/❚❚: Press to set the unit to the record or record-pause mode.
◄: Press to play back the tape in the reverse direction.
■: Press to stop the tape.
This also sets the TAPE mode.
►: Press to play back the tape in the forward direction.
❺ BASS buttons (+, –)
(Control range from –6 to 6.)
❻ TREBLE buttons (+, –)
(Control range from –6 to 6.)
❼ SHIFT button
❽ ACTIVE HYPER-BASS (AHB.) PRO button
❾ POWER button
❿ AUX button
⓫ VOLUME buttons (+, –)

Press the following buttons while holding down the SHIFT button ❼.

⓬ DISPLAY button
Use to display the current time.
⓭ PROGRAM button
⓮ REPEAT play button
⓯ RANDOM play button
⓰ AUTO PRESET button
⓱ FM MODE button
⓲ SYNCHRO REC button

www.manualscenter.com

SWITCHING THE POWER ON/OFF

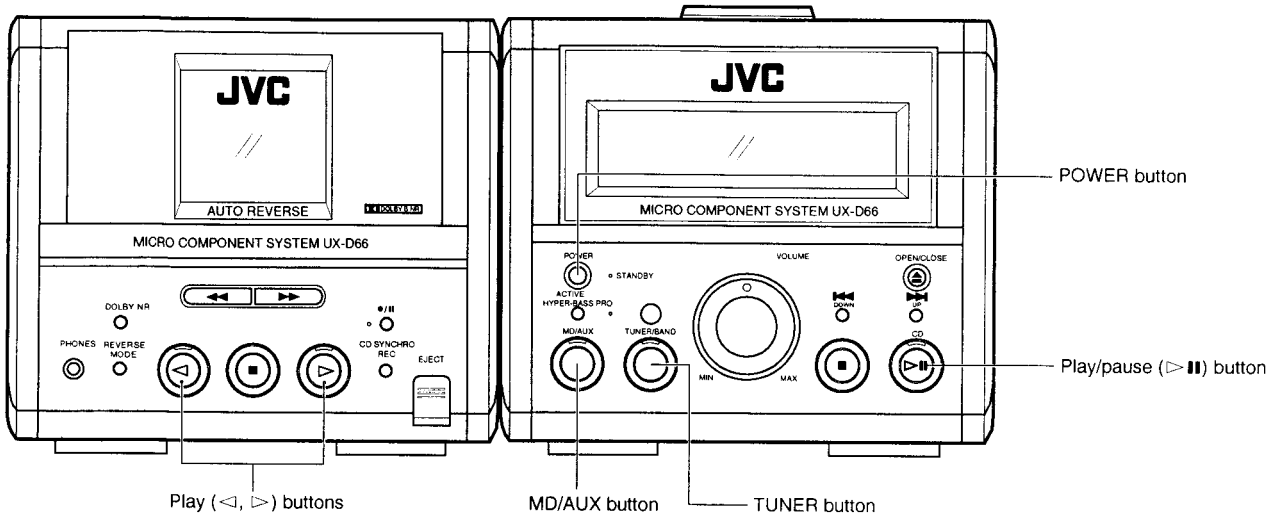

Switching the power on/off

- Switching on:

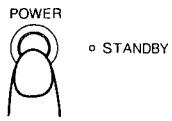

The indicator goes out.	• The indicator in the display window lights.

- Switching off:

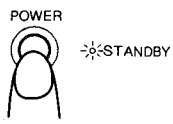

The indicator lights.	• The indicator in the display window goes out and only the clock is indicated.

One touch operation (COMPU PLAY)

Even when the power is set to STANDBY, pressing the button shown below switches on the power and selects the source.

	Function mode	Operations
CD ▷II	CD	When this button is pressed with a CD loaded, CD playback begins.
◁ or o *oppure* ▷	TAPE	When this button is pressed with a tape loaded, tape playback begins.
TUNER/BAND	TUNER	When this button is pressed, the tuner is engaged.
MD/AUX	MD/AUX	A sound source connected to the AUX terminal can be engaged.

When the (⏏) OPEN/CLOSE button is pressed, the sound source does not switch, but the CD holder can open or close.

Notes:
- When switching off the power, be sure to press the POWER button.
- The COMPU PLAY button on the remote control has the same function as that on the main unit.

VOLUME, TONE AND OTHER CONTROLS

VOLUME buttons (+, –) (using the remote control unit)

Pressing either of these buttons makes the indicator on this unit's volume control knob blink and the knob rotates in the appropriate direction.

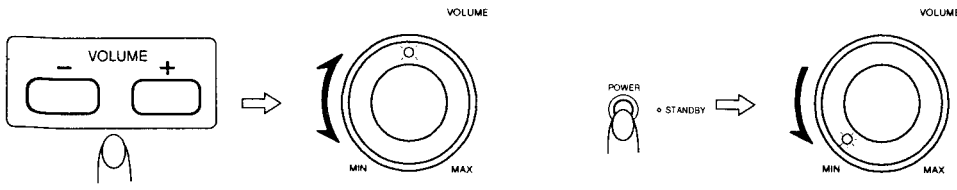

- After pressing the power button to switch the power off, the volume control knob rotates to the minimum level and then the power is switched off. When the power is switched on at a later time, the volume control knob rotates to approximately the level to which it was most recently set.

BASS/TREBLE buttons

To set the bass or treble level, press the corresponding button. The level setting ranges from –6 to 6.

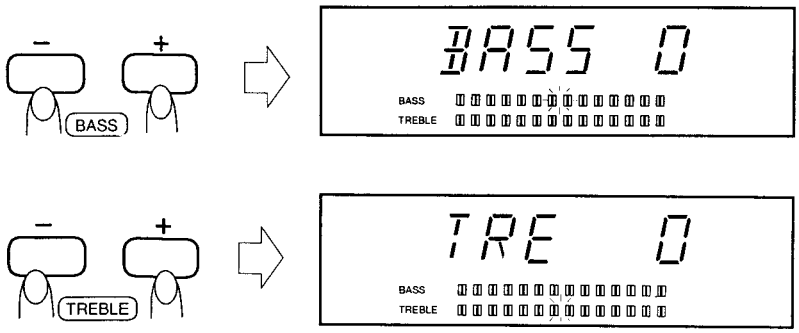

ACTIVE HYPER-BASS PRO button

ON : The ACTIVE HYPER-BASS PRO indicator lights up. Set to this position to activate ACTIVE HYPER-BASS PRO sound.
OFF: The ACTIVE HYPER-BASS PRO indicator goes out. Set to this position when ACTIVE HYPER-BASS PRO sound is not required.

HANDLING CDs

Since dirty, damaged and warped CDs may damage the unit, take care regarding the following:

1. **Usable CDs**
   Use CDs with the mark shown.

2. **Notes on handling CDs**
   - Do not touch the reflective recorded surface.
   - Do not stick or write anything on the label side.
   - Do not bend CDs.

3. **Storage**
   - After removing a CD from the unit, be sure to put it back in its case.
   - Do not expose CDs to direct sunlight, high temperatures from a heater, etc., high humidity, or dust.

4. **Cleaning CDs**
   - Before loading a CD, wipe off any dust, dirt or fingerprints with a soft cloth. CDs should be cleaned by wiping radially from the center to the edge.

- **Never use thinner, benzine, record cleaner or antistatic spray.**

- Removing the CD from its storage case and loading it.

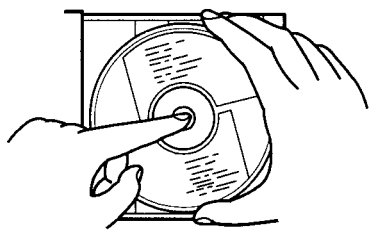

- Press the center and lift out.

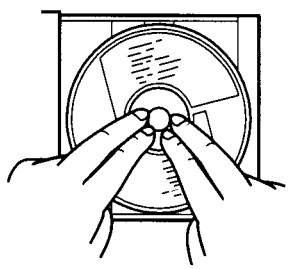

- Press to secure the CD.

www.manualscenter.com

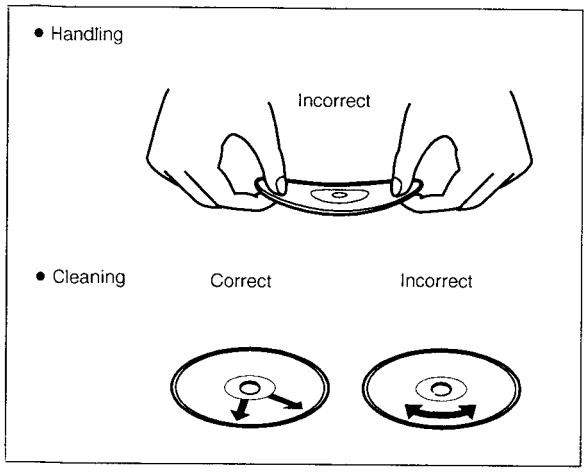

PLAYING CDs

Playing an entire CD
The following example of playing an entire CD assumes a CD with 12 tracks and a total playing time of 48 minutes 57 seconds.

Operate in the order shown

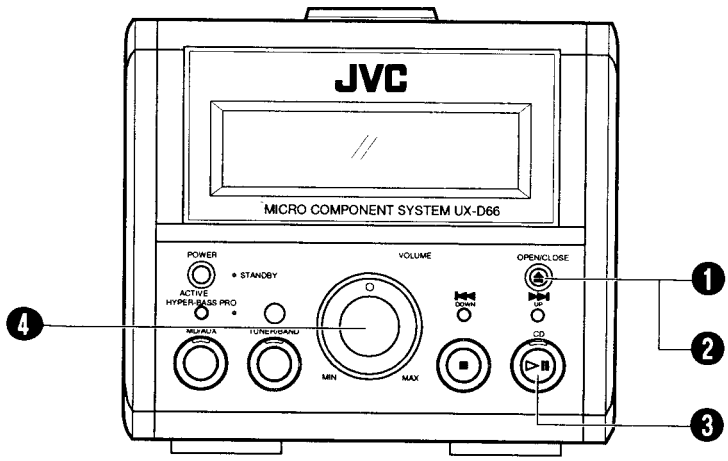

❶ Press to open the CD holder. (The power is switched on.)
❷ Load a CD with the label side facing up and close the CD holder.
❸ Press to start play.
- As tracks are played, their track numbers go out one by one.

❹ Adjust.

Note:
When the CD holder is closed by pressing the ▷II button, the CD starts as soon as the CD holder is closed.

- 8-cm (3") CDs can be used in this unit without an adapter.

- **To stop in the middle of a CD**
  During play, press the ■/CLEAR button to stop play.

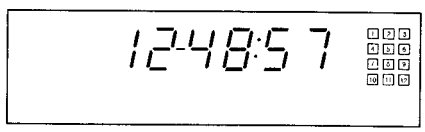

- The total number of tracks and total playback time are displayed.

- **To stop a CD temporarily**
  Press the ▷II button to stop play temporarily. When pressed again, play resumes from the point where it was paused.

Caution:
- To change CDs, press the ■/CLEAR button; check that the CD has stopped rotating completely before unloading it.

Notes:
- The following indication may appear when a CD is dirty or scratched, or when the CD is loaded upside down. In such a case, check the CD and insert again after cleaning the CD or turning it over.

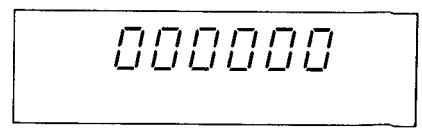

- **Do not use the unit at excessively high or low temperatures. The recommended temperature range is from 5°C (41°F) to 35°C (95°F).**
- After play, unload the CD.
- If mistracking occurs during play, lower the volume.

Skip play

- During play, it is possible to skip forward to the beginning of the next track or back to the beginning of the track being played or the previous track; when the beginning of the required track has been located, play starts automatically.

To listen to the next track...
Press the ►►I button once to skip to the beginning of the next track.
To listen to the previous track...
Press the I◄◄ button to skip to the beginning of the track being played. Press twice quickly to skip to the beginning of the previous track.

Search play (to locate the required position on the CD)

- The required position can be located using fast-forward or reverse search while playing a CD.

- Hold down the button; search play starts slowly and then gradually increases in speed.
- Since low-volume sound (at about one quarter of the normal level) can be heard in the search mode, monitor the sound and release the button when the required position is located.

Direct access play (using the remote control unit)

- Pressing any of the track number buttons will start play from the beginning of the designated track without you having to press the ►/II button. (This function cannot be used during programmed play.)

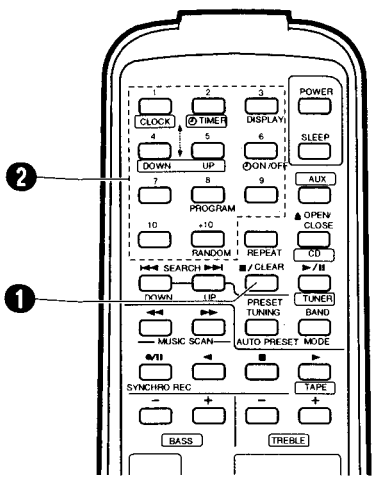

❶ Press the ■/CLEAR button to set to the CD mode.
❷ Designate the required track using the track number buttons.
- To designate track numbers 1 to 10, press the track number button corresponding to the track number.

- To designate track number 11 or higher, press the +10 button the required number of times, then a track number button. (Example: To designate the 20th track, press the +10 button once, then press track number button 10.)

* +10 button:
Each time this button is pressed, the number increases by 10. First press this button to set the 10's digit, then press the track number button to set the 1's digit.

- **To skip to another track during play**
When the required track number button is pressed, the display shows the designated track number and play starts from the beginning of the designated track.

Programmed play (using the remote control unit)

- Up to 20 tracks can be programmed to be played in any required order.
The total playing time of programmed tracks is displayed (up to 99 minutes, 59 seconds).
(Example: When programming the 2nd track to be played first, and the 6th track next, then the 12th track, etc.)

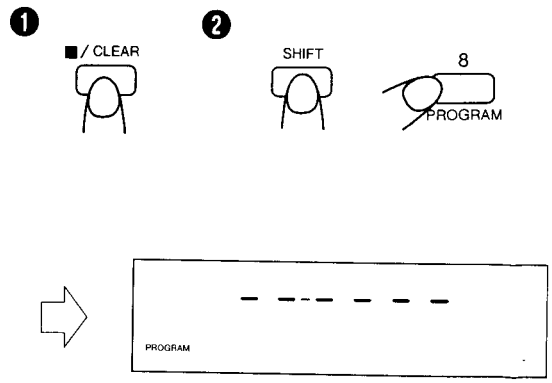

To designate the 2nd track.

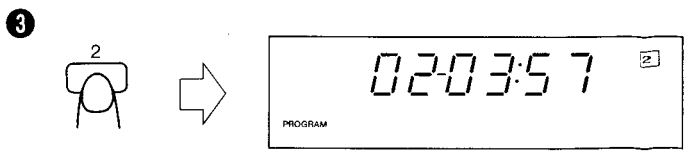

❶ Press the ■/CLEAR button.
❷ Press the PROGRAM button while pressing the SHIFT button to set to the programming mode.
- **Release the SHIFT button.**

❸ Press to designate the required track number.

❹

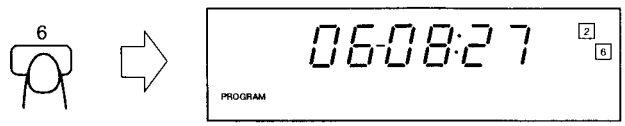

The total playback time of programmed tracks is displayed.

To designate the 12th track.

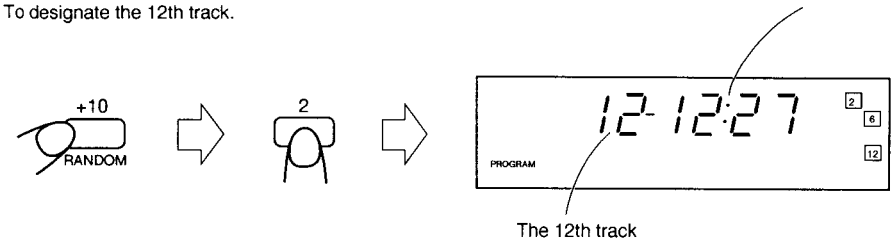

❺

❹ Designate the remaining tracks by pressing the track number buttons.
❺ Press the ►/II button when programming is completed. Programmed play starts.

To confirm the details of a program...
Press the PROGRAM button while pressing the SHIFT button; the tracks making up the program will be displayed in programmed order.

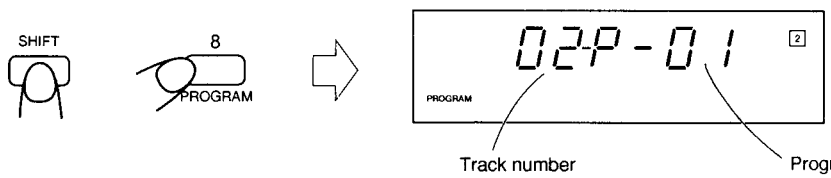

To clear the programmed tracks...
Press the ■/CLEAR button before playing a CD. During programmed play, press this button twice. When the CD holder is opened, programmed tracks are cleared automatically.

Notes:
- If the total playing time of the programmed tracks exceeds 99 minutes 59 seconds, the total playing time indication will go out.
- When programming a track number higher than 21 on a disc containing more than 21 tracks, the total playback time of all the programmed tracks will not be displayed.
- When a CD with 16 or more tracks is loaded, the "OVER" indicator will appear.

Repeat play (using the remote control unit)

Press the REPEAT button while pressing the SHIFT button before or during play. A single track or all the tracks can be repeated.

Whether a single track or all tracks are to be repeated can be specified. Each time the REPEAT button is pressed while pressing the SHIFT button, the mode will change from a single track (⊂), to all the tracks (⊂ ALL), to the clear mode, in this order.

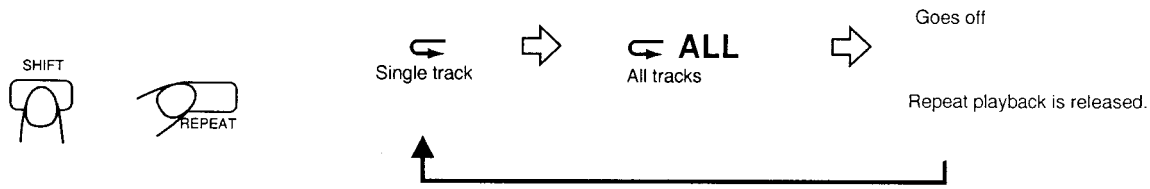

- **Single track repeat (⊂)**
  The track being played will play repeatedly.
- **All track repeat (⊂ ALL)**
  All tracks or the programmed tracks of a CD will play repeatedly.

Random play (using the remote control unit)

Press the RANDOM button while pressing the SHIFT button, and all tracks on a CD play once in random order.

HANDLING CASSETTE TAPES

Cassette tapes

1. Loose tape may cause trouble. Using a pencil or like object, gently tighten the tape as shown.
2. To prevent recordings from being erased accidentally, remove the tab(s) with a screwdriver, etc. Reseal the slots with adhesive tape to erase and re-record after the tabs have been removed.
3. C-120 cassettes are not recommended because they are prone to malfunction.

Cassette loading

1. Press the EJECT button to open the cassette holder.
2. Load a cassette as shown.
3. Close the cassette holder by pressing it gently. Listen for the click indicating that the holder is securely shut.

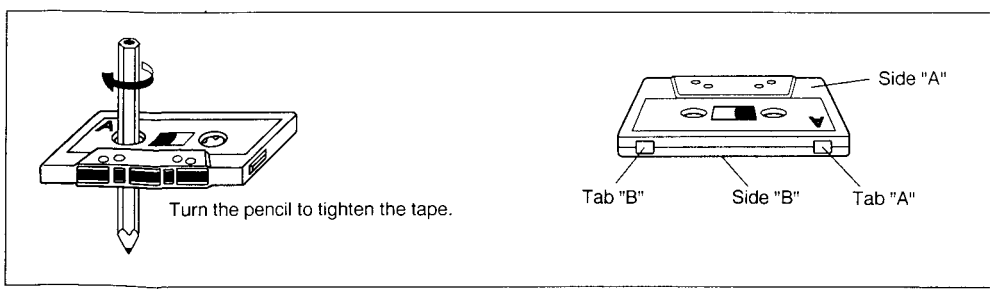

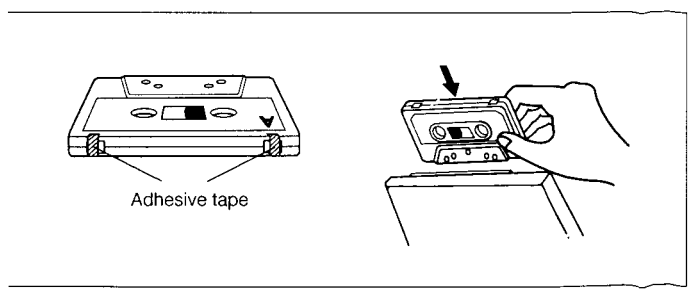

www.manualscenter.com

Note:
If the power is switched off while tape is running, it may be impossible to remove the cassette. If this happens, switch the power on again before attempting to remove the cassette.

Auto tape select mechanism
This unit has an Auto Tape Select mechanism which distinguishes between different types of tape using detection holes in the cassette. After the type of tape has been detected, bias and equalization suitable for the tape are set.

- Cassettes with detection holes:
  Metal tape (EQ: 70 µs) .....Type IV
  CrO_2 (chrome) tape (EQ: 70 µs) .....Type II
- Cassettes without detection holes:
  Normal tape (EQ: 120 µs) .....Type I

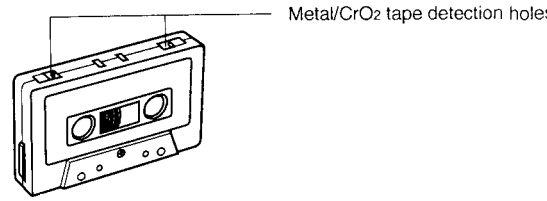

CASSETTE PLAYBACK

Operate in the order shown

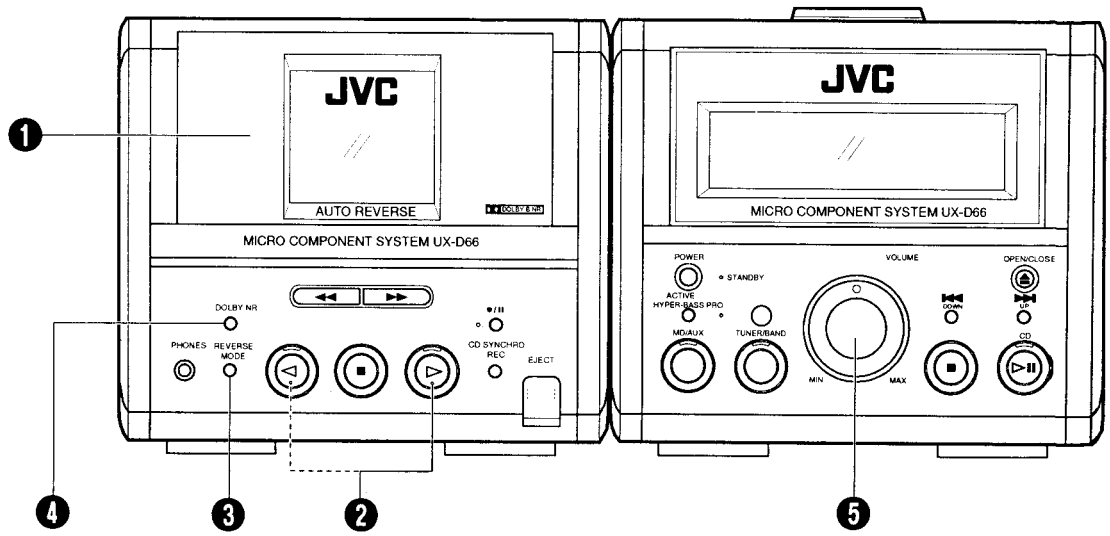

❶ Load a cassette tape with side A facing out.
❷ Press to start playback. (The power is switched on and the TAPE mode is engaged to start tape playback.)
❸ Select the reverse mode (⇄ / ⇄ / ⟲).
❹ Set the DOLBY NR switch as required.
❺ Adjust.

- After loading a cassette tape, simply press the ▷ or ◁ button. The power is switched on and the tape starts playback.

- When the tape plays back with the reverse mode set to ⇄ (single side play) or ⇄ (both side play) mode, the tape stops automatically at the end of tape after playing one or both sides. When the reverse mode is set to the ⟲ (continuous play) mode, the tape continuously plays one side after the other until you stop operation.

Music Scan

- The beginning of the current tune or the next tune can be located using the music scan function.

① Press the ▷ or ◁ button for tape playback.
② Press the ▶▶ or ◀◀ button for music scan.

	• To the start of the next tune	• To the start of the tune being played back
Forward (▷) direction playback	▶▶	◀◀
Reverse (◁) direction playback	◀◀	▶▶

- The tape direction indicators blinks rapidly during music scanning.

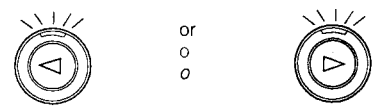

③ When the specified tune is located, playback will start automatically.
- To skip two or more tunes, repeat steps ② and ③ above.

Notes:
With the following types of tape, the Music Scan mechanism may not operate correctly. This is not a malfunction; use music scan function only with suitable tapes.
- Tapes with tunes having long pianissimo passages (very quiet parts) or non-recorded portion during tunes.
- Tapes with short non-recorded sections.
- Tapes with high-level noise or hum between tunes.

DOLBY NR system

- **Set the DOLBY NR as required. The DOLBY NR indicator lights.**

Note:
The optimum sound quality will not be obtained if different DOLBY NR switch settings are used during recording and playback.

www.manualscenter.com

RADIO RECEPTION

Operate in the order shown

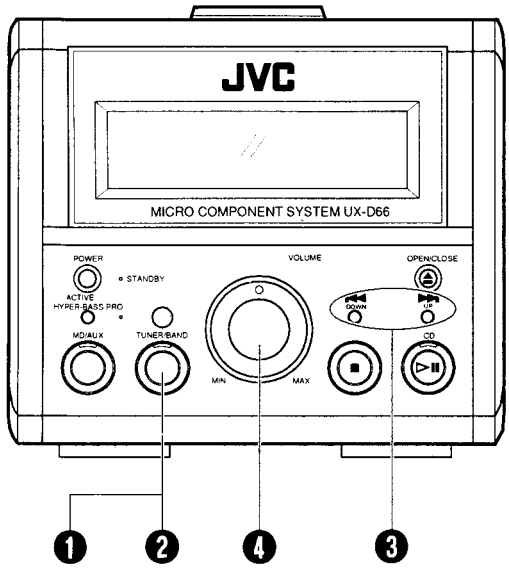

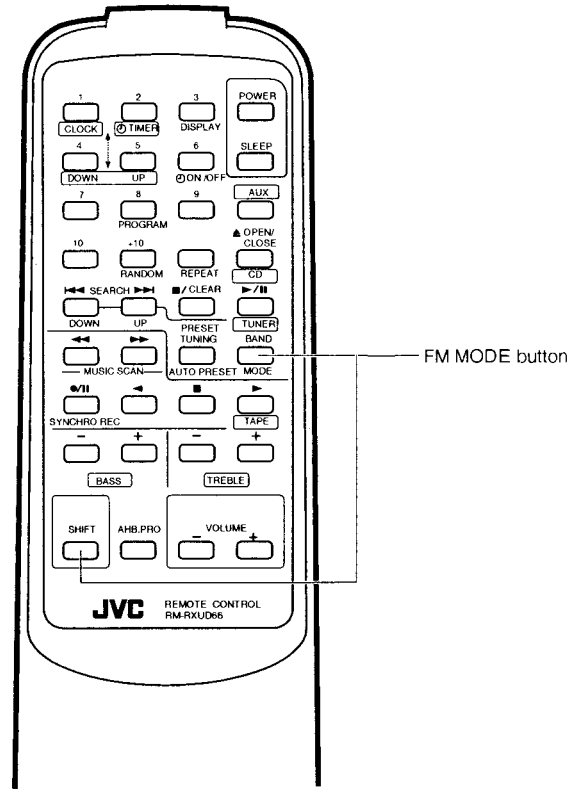

1. Press the TUNER/BAND button.
   - The power is switched on and a band and radio frequency will be shown in the display.
2. Select the band.
3. Tune to the required station.
4. Adjust.

FM MODE button (using the remote control unit)

Auto mode:
Set to this position when listening to or recording an FM stereo broadcast. The STEREO indicator lights when the FM stereo broadcast is received.

Note:
It is not a malfunction that the STEREO indicator goes out when the volume control knob is rotated to its minimum position while in FM stereo mode.

MONO:
Set to this position when FM stereo reception is noisy. When another station is tuned to in the MONO mode, the unit automatically enters Auto mode.

- **Seek tuning**
  Press the UP or DOWN button for one second or more. The unit enters the seek tuning mode to tune in the nearest station automatically, so the broadcast can be heard. In AM operation, the frequency moves continuously from the MW to the LW band and vice versa.

- **Manual tuning**
  Each time the UP or DOWN button is pressed, the unit steps through the current frequency band. Tuning is done in steps of 50 kHz for FM and 9 kHz for AM (MW/LW).
  In AM operation, the tuned frequency moves continuously from the MW (522-1,629 kHz) to the LW (144-288 kHz) band and vice versa.

Notes:
- When seek tuning to the required station is not possible because the broadcast signal is too weak, press the UP or DOWN button momentarily to perform manual tuning.
- When the power is set to STANDBY, or another mode (TAPE or CD) is selected, the last tuned frequency is stored in memory. When the power is switched on again and TUNER/BAND button is pressed, the same station will be tuned to.

Auto preset tuning (using the remote control unit)

This function scans the current band, detecting frequencies used to broadcast signals, and stores the first 15 frequencies in memory automatically.

- Press the AUTO PRESET button while pressing the SHIFT button. The frequencies of stations broadcasting signals can be stored in memory automatically in the order of increasing frequency. (15 stations in each band.)

Presetting stations (using the remote control unit)

15 stations in each band can be preset as follows:

- Example: (Presetting an FM station broadcasting on 103.5 MHz to preset button "15")

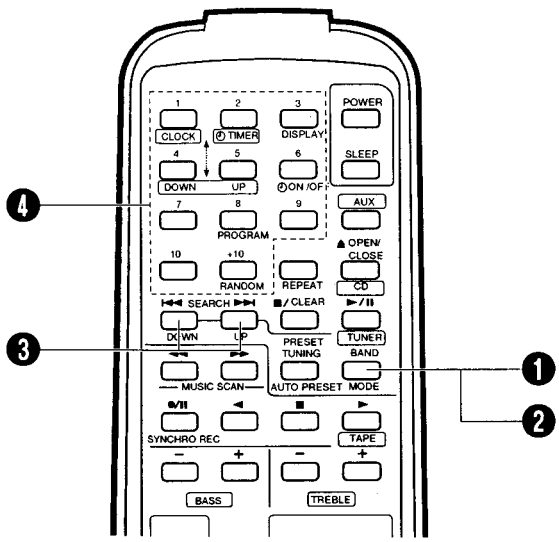

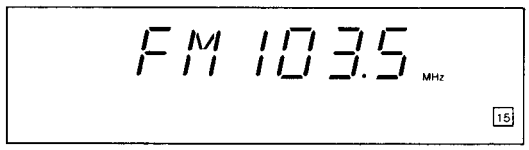

❶ Press the TUNER/BAND button.
❷ Select the FM band using the TUNER/BAND button.
❸ Tune to the required station.
❹ Press preset button "+10", then "5" for more than 2 sec. (When "15" blinks in the preset station display, the station has been stored.)

- Repeat the above procedure for each of the other stations, using a different preset button each time.
- Repeat the above procedure for the other band.

- **To change preset stations**
  Perform step ❹ above after tuning to the required station.

Notes:

- The previous stored station is erased when a new station is stored, because the new station's frequency replaces the previous frequency in memory.
- When listening to an AM (MW/LW) broadcast, noise may be heard if the remote control unit is used.

> - All preset stations will be erased when the power cord is disconnected or a power failure occurs for more than 24 hours. In such cases, store the stations again.

Preset tuning

(Using the remote control unit)

- The stations must be preset before this operation can be performed.

❶ Press the TUNER/BAND button.
❷ Select the band using the TUNER/BAND button.
❸ Press the PRESET TUNING button to select the required preset station.
(or) Press the required preset station buttons (No. 1 – No. 10 and +10).

- The preset station number and frequency corresponding to the button pressed are shown.

Using the antennas

FM: Connect the provided FM feeder antenna (see page 6).

AM (MW/LW): Adjust the position of AM (MW/LW) loop antenna.

www.manualscenter.com

RECORDING

- During recording, the ALC (Automatic Level Control) circuit automatically optimizes the recording level, so manual recording level adjustment is unnecessary.
- Check that the safety tab on the cassette tape is not broken off.

> **Note:**
> This unit has recording characteristics suitable for normal and CrO_2 tapes. Normal and CrO_2 tapes have different characteristics from metal tapes.

Synchronized recording with the CD player

- In this system, the CD player starts play when the cassette deck enters the recording mode.

Operate in the order shown

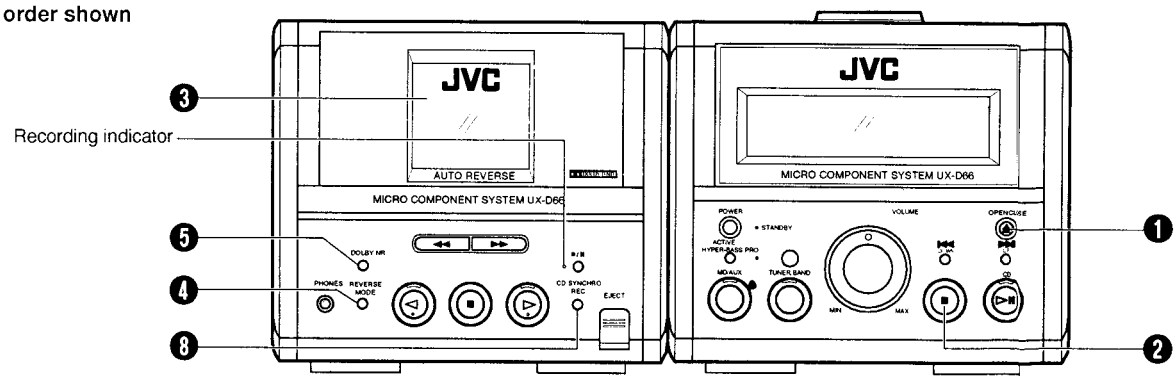

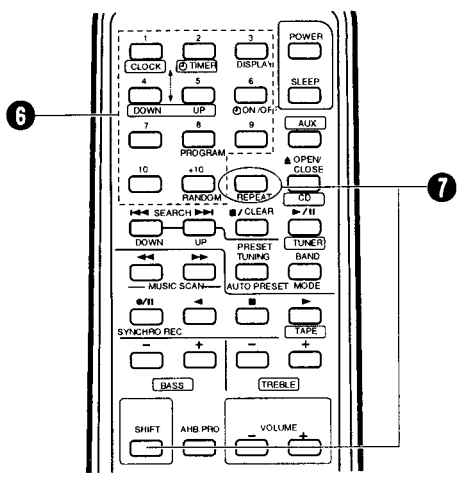

❶ Load a CD and close the CD holder. (The power is switched on.)
❷ Set to the CD mode.
❸ Load a cassette with side A facing out. (Wind past the tape leader before starting recording.)
❹ Select the required reverse mode (⇄ or ⇄).
❺ Set the DOLBY NR switch as required.
❻ When programmed play is required, program the required tracks using the remote control. (See page 24.)
- Select tracks with a total playing time which does not exceed the tape length.

❼ When recording a CD in repeat play mode, set as required.
❽ Press the SYNCHRO REC button; synchronized recording will start. (The recording indicator lights up.)

- Recording starts in the forward direction and CD play starts automatically.

- After the CD player has played the entire CD or programmed tracks, the deck stops automatically.
- Non-recorded sections of approx. 4 seconds are automatically left between tunes.
- To stop recording in the middle, press the ■/clear button of the CD player. The cassette deck also stops after 4 seconds.

Note:
- During CD synchro recording, the ▷II and SEARCH (|◀◀, ▶▶|) buttons do not function.

www.manualscenter.com

When non-recorded section between tunes is not required...
Perform the following.
① Press the ▷II button of the CD player twice. The CD Player enters the pause mode.
② Press the SYNCHRO REC button to start recording.

Note:
- Depending on the CD used, non-recorded sections of different lengths may be left between tunes.

- **CD complete recording function (Synchro recording mode only)**
  If the tape is reversed while a CD is being played, recording will be done on the reverse side of the tape as follows:
  * When less than 10 seconds of the last tune on the forward side of the tape have been recorded, recording on the other side of the tape will start from the beginning of the previous track.
  * When more than 10 seconds of the last tune on the forward side of the tape have been recorded, recording on the other side of the tape will start from the beginning of the current track.

- **To record an entire disc in the track order of the CD**
  After the operations in steps ❶-❺ above, press the ▷II button of the CD player after the ●/II and ▷ buttons have been pressed.

Recording from the radio or an external source connected to the AUX terminals

Operate in the order shown

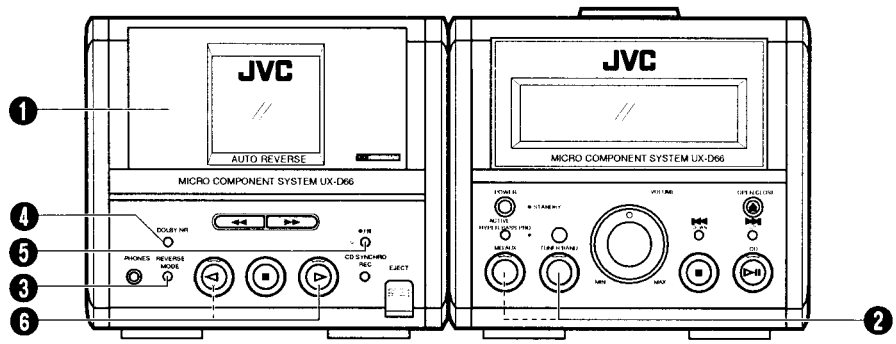

❶ Load a cassette with side A facing out.
(Wind past the tape leader before starting recording.)
❷ Select the source to be recorded.
TUNER: Press the TUNER/BAND button. Tune to the required station.
MD/AUX: Press the MD/AUX button.
❸ Select the required reverse mode (⇄ or ⇄).
❹ Set the DOLBY NR switch as required.
❺ Press the ●/II button (recording-pause mode).
- The tape direction indicator blinks.
- The function switch is locked and its position cannot be changed.

❻ Press to start recording.

- To stop recording temporarily, press the ●/II button. To resume recording, press the ▷ or ◁ button corresponding to the tape direction indicator which is blinking.

Erasing
A recorded tape can be erased by recording new material over the previous material.

To erase a tape without making a new recording...
Press the ■ (stop) button to set to the TAPE mode, then perform recording.

Note:
When erasing a tape, turn the DOLBY NR off.

It may be unlawful to record or playback copyrighted material without the consent of the copyright owner.

CLOCK ADJUSTMENT

(Using the remote control unit)
Names of parts in the clock/timer section, and their functions:

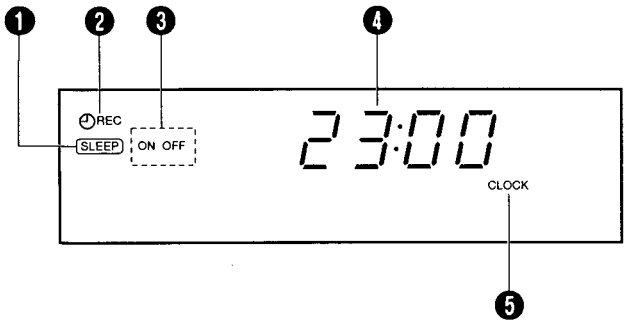

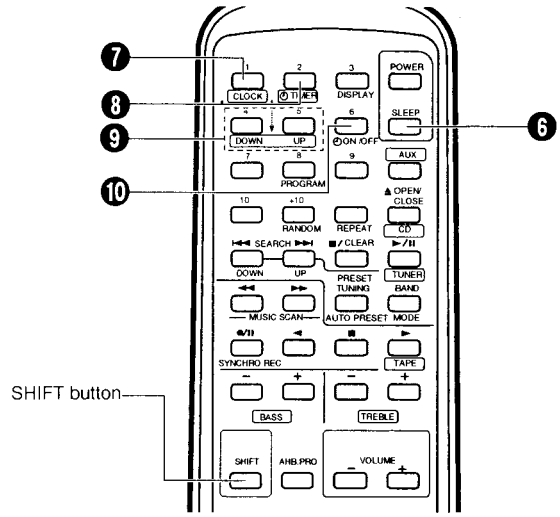

❶ SLEEP indicator
❷ Timer mode indicator
❸ Timer indicator (ON/OFF)
❹ Time display
❺ CLOCK indicator
❻ SLEEP button

Press the following buttons while holding down the SHIFT button.
❼ CLOCK button
❽ TIMER (◷) button
❾ DOWN/UP buttons
❿ Timer (◷) ON/OFF button

Setting the current time (when this unit is used for the first time)

(Example: To set the clock to 13:15.)

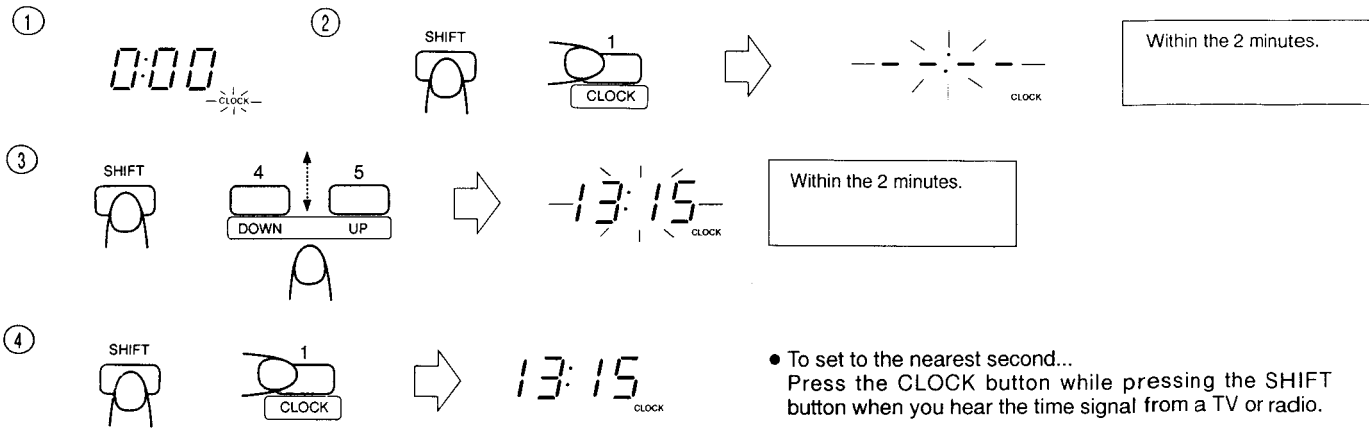

① Connect the AC power cord; "CLOCK" will blink in the display.
② Press the CLOCK button while pressing the SHIFT button.
③ Set to 13:15 by pressing the UP/DOWN buttons while pressing the SHIFT button.
(When the buttons are kept pressed, the minute/hour indication changes continuously.)
④ Press the CLOCK button while pressing the SHIFT button.

- To set to the nearest second...
  Press the CLOCK button while pressing the SHIFT button when you hear the time signal from a TV or radio.

Notes:
- Before performing timer recording or playback, it is necessary to set the current time.
- It is recommended to set the current time with the POWER button set to STANDBY so that the current display mode is maintained.
- When the power cord is plugged in again after being disconnected or power is restored after a power failure, "CLOCK" will blink in the display. Set the current time again.

www.manualscenter.com

TIMER OPERATIONS

(Using the remote control unit)

Setting the timer

- The current time must be set before the timer can be used.

❶ Press the TIMER (◷) button while pressing the SHIFT button.

While pressing the SHIFT button.

Within the 30 sec.

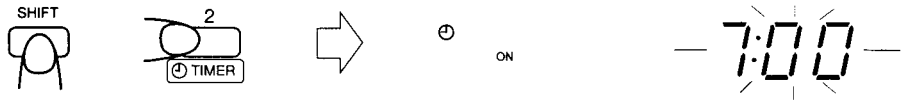

❷ Set the start time.
(Example: To set the timer to 12:15.)

While pressing the SHIFT button.

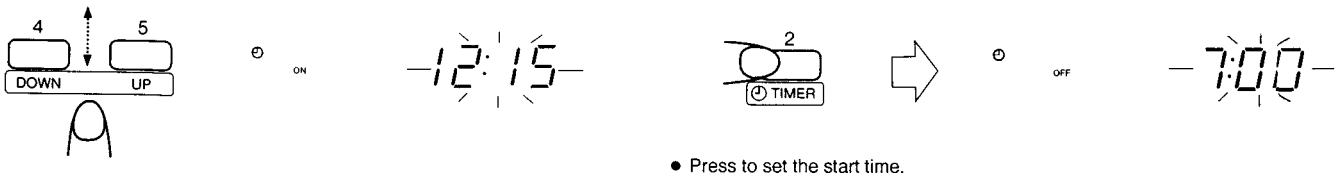

- Press to set the start time.

❸ Set the stop time.
(Example: To set the timer stop time to 13:15.)

While pressing the SHIFT button.

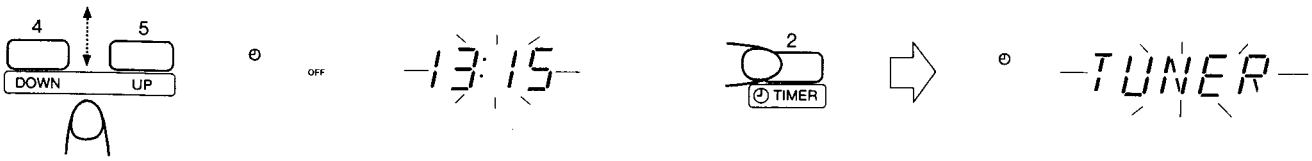

- Press to set the timer off time.

❹ Select the TIMER mode.
- The selected timer mode is shown in the display.

While pressing the SHIFT button.

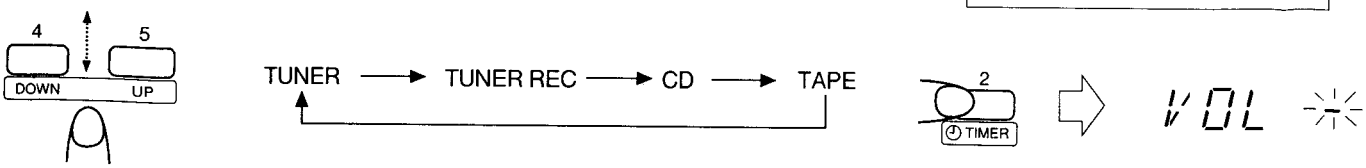

When the UP button is pressed to select the timer mode, the mode changes from TUNER (timer reception of a broadcast), to TUNER/REC (timer recording of a broadcast), to CD (timer play of a CD), to TAPE (timer playback of a tape), in this order.

❺ Set the volume.

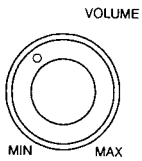

- If the volume level is set to 5, the volume contol knob automatically rotates to the position shown when the timer starts.

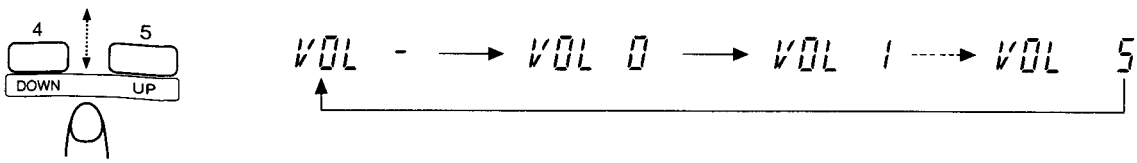

When the UP button is used to select the volume.

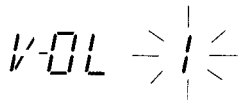

This shows when volume level 1 is selected.

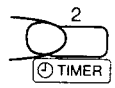

• The selected volume is set.

• The unit enters the previously engaged mode and timer setting has been completed.

• When the volume setting is set to "VOL -" (volume level is not specified), the timer playback volume is at the level used before setting the timer.

• **To confirm the timer setting**

1. Each time the (◷) TIMER button is pressed while pressing the SHIFT button, the timer setting can be confirmed.
2. When the previously engaged mode is displayed, timer setting has been completed.

Notes:

• When the timer is set incorrectly or the correct mode is not selected, perform "Setting the timer" from the beginning.
• When the timer is set, "-:--" in the display is replaced by the input digits.
• When the timer stop time is not set, the timer operates for 2 hours and then the unit is switched off.

Timer recording of broadcast

• The current time must be set before the timer can be used.
• Make sure that the safety tabs of the cassette have not been broken off.

Operations

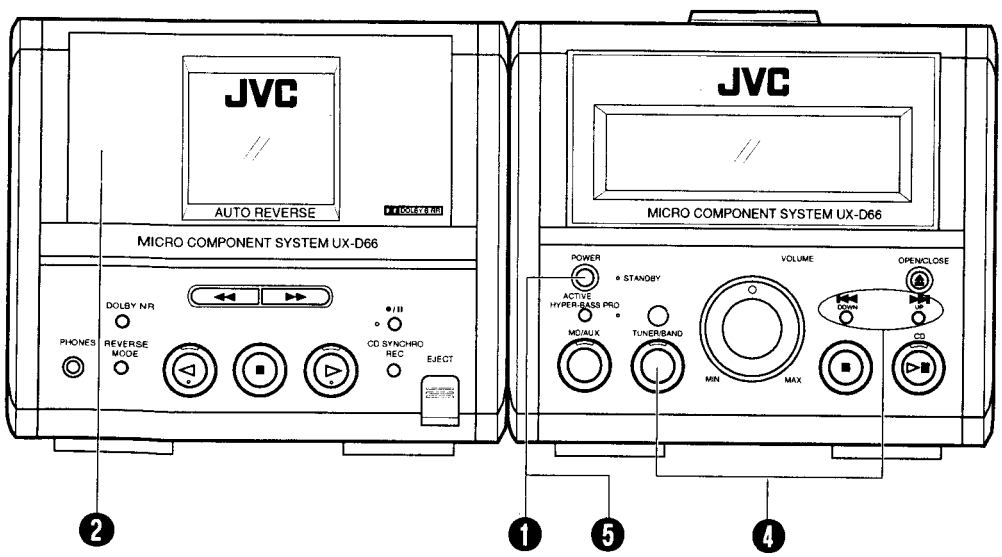

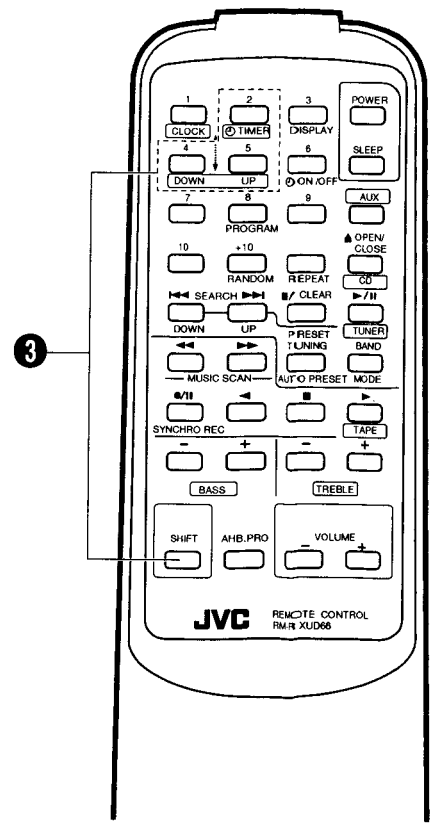

❶ Set the POWER button to ON.
❷ Load a cassette.
• Insert the cassette with the side to be recorded facing out.
• Set the reverse mode button to " ⇄ " or " ⇄ " and set the DOLBY NR button as required.
❸ Set the timer. (Refer to "Setting the timer" on page 40.)
• Set the timer about a minute before the broadcast to be recorded is scheduled to start.
❹ Tune to the station to be recorded. (Refer to page 31.)
❺ Set the POWER button to STANDBY.

www.manualscenter.com

- **Timer recording will start at timer start time and the power will be switched off at timer stop time.** (The timer mode is then released.)

- **To cancel timer operation**
  Press the timer (◷) ON/OFF button while pressing the SHIFT button so that the timer mode indicator (◷) goes out.

If you do this, timer recording will not start at the timer start time.

Notes:
Once the timer has been set, the start and stop times, etc., are stored in memory. When timer recording or playback is required at different times, the timer must be set again.
- After setting the timer start and stop times, check that the tuner is tuned to the required frequency.
- When the power cord is disconnected or there is a power failure, timer settings will be erased from memory. If this happens, set the current time and perform the timer setting again.

Timer playback

- Timer playback of tapes, broadcasts and CDs is possible.

Operations

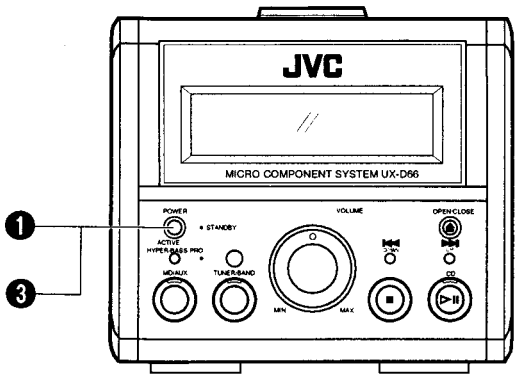

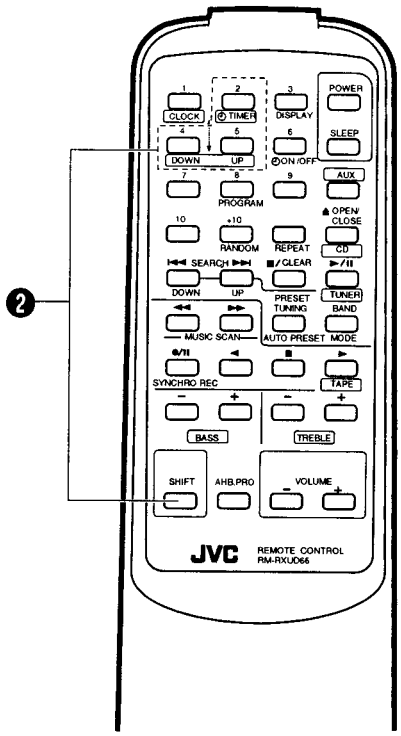

❶ Set the POWER button to ON.
❷ Set the timer. (Refer to "Setting the timer" on page 40.)

Source sound	Timer mode	Operations
CD play	CD	Load a disc.
Tape playback	TAPE	Load a cassette tape.
Broadcast	TUNER	Tune to the required station.

❸ Switch the power off.

- Timer playback will start at the timer start time and the power will be switched off at the timer stop time.
  The unit remains in the same timer mode even after the power is switched off. The same timer function will repeat at the same time on the following day.

- When the power is switched on, it is possible to fade in the sound from volume level 0 (zero) to the preset volume.

- **To cancel timer operation**
  Press the timer (⏲) ON/OFF button while pressing the SHIFT button so that the timer mode indicator (⏲) goes out.

Notes:
- When the volume setting is set to "VOL -" (volume level is not specified), the timer playback volume is set to the level used before setting the timer.
- To stop during timer playback, press the POWER button to switch the unit off.

Sleep timer operations (using the remote control unit)

A. Use this when you want to fall asleep while listening to a tape, broadcast or CD.

① Set to the required source and tune (broadcast) or play back (CD or tape).
② Press the SLEEP button to set the sleep time.

SLEEP is shown in the display.

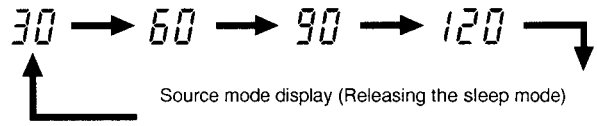

- Sleep time settings of 30, 60, 90 or 120 minutes can be set. When you release the SLEEP button, the source is displayed after 5 sec.

- The sleep timer operation will start and the power will be switched off after the specified time.

- **Checking the sleep time**
  When the SLEEP button is pressed, the remaining sleep time is displayed. If it is pressed again, a new sleep time can be set.
- **To cancel the sleep timer operation**
  Press the POWER button to switch the power off or press the SLEEP button until the sleep time indicator disappears.

B. To fall asleep while listening to a tape, broadcast or CD and to perform timer playback the following morning

① Set the timer. (Refer to "Setting the timer" on page 40.)
② Set to the required source (broadcast, tape or CD).
③ Press the SLEEP button to set the sleep time.

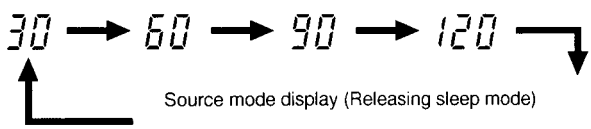

- Any source can be selected for sleep timer operation and timer playback. For example;
  - CD play for sleep timer operation and broadcast reception for timer playback.
  - Tape playback for sleep timer operation and CD play for timer playback.

However, when broadcast reception is selected for both sleep timer operation and timer playback, the station you heard at night will be tuned to the following morning.

www.manualscenter.com

MAINTENANCE

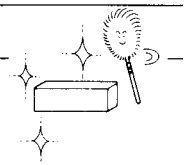

Cleaning is important!
When the tape is running, magnetic powder and dust naturally accumulate on the heads, capstan and pinch roller. When they become too dirty...
- Sound quality deteriorates.
- The output sound level drops.
- Previously recorded tape is not completely erased.
- Recording is not performed satisfactorily.

Therefore, you should clean the heads, etc. after every 10 hours of use for optimal recording conditions.

Cleaning the heads, capstan and pinch roller
Open the cassette holder.
Clean the heads, pinch roller and capstan.
For effective cleaning, use a cleaning kit available from an audio store.
After cleaning, be sure that the cleaning fluid has dried completely before loading a cassette.

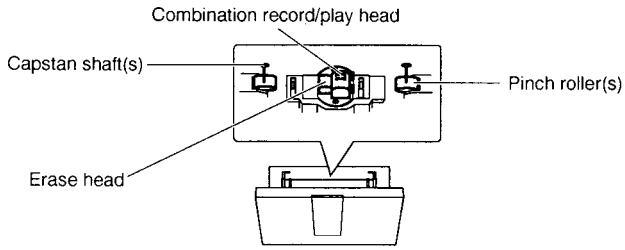

Cautions:
1. Keep magnets and metallic objects away from the head.
   If the head becomes magnetized, noise will increase and the sound will deteriorate. Demagnetize the head every 20-30 hours of use with a head eraser (available from an audio store). (When demagnetizing the head, the POWER button should be set to STANDBY.)
2. Do not use anything other than alcohol for cleaning.
   Thinner and benzine will damage the rubber pinch roller.

Cleaning the lens
If the lens in the CD pickup is dirty, dropout, etc. could degrade sound.
Open the CD holder and clean the lens as shown.
- Use a blower (available from a camera store) to blow dust off the lens.
- If there are fingerprints, etc. on the lens, gently wipe clean with a cotton swab.

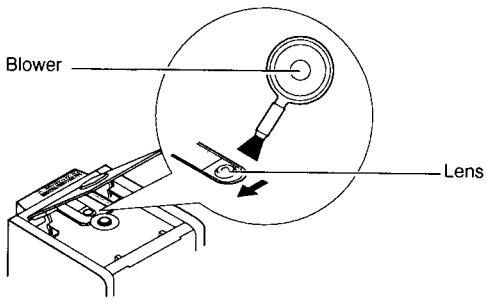

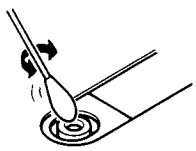

TROUBLESHOOTING

What appears to be trouble is not always serious. First make sure....

- **Power cannot be turned on.**
  * Is the power cord unplugged?
- **No sound from the speakers.**
  * Are headphones connected?

CD Player Section
- **The CD player does not play.**
  * Is the CD upside down?
  * Is the CD dirty?
- **A certain portion of the CD does not play correctly.**
  * Is the CD scratched?

Cassette Deck Section
- **Playback sound is at a very low level.**
  * Is the head dirty?
- **The ●/II button does not function.**
  * Have the safety tabs of the cassette been broken off?

Tuner Section
- **Reception is noisy.**
  * Try adjusting the antenna.

Timer Section
- **Timer operation does not start.**
  * Is the current time set correctly?
  * Is the timer mode (⏲) displayed?

Remote Control
- **Remote control is impossible.**
  * Are the batteries in the remote control exhausted?
  * Is the REMOTE SENSOR section exposed to bright light (direct sunlight, etc.)?

Note:
Before making an important recording, be sure to make a test recording first to check that the deck, etc. is working correctly.

www.manualscenter.com

1 Location of main parts

■ CD/tuner section

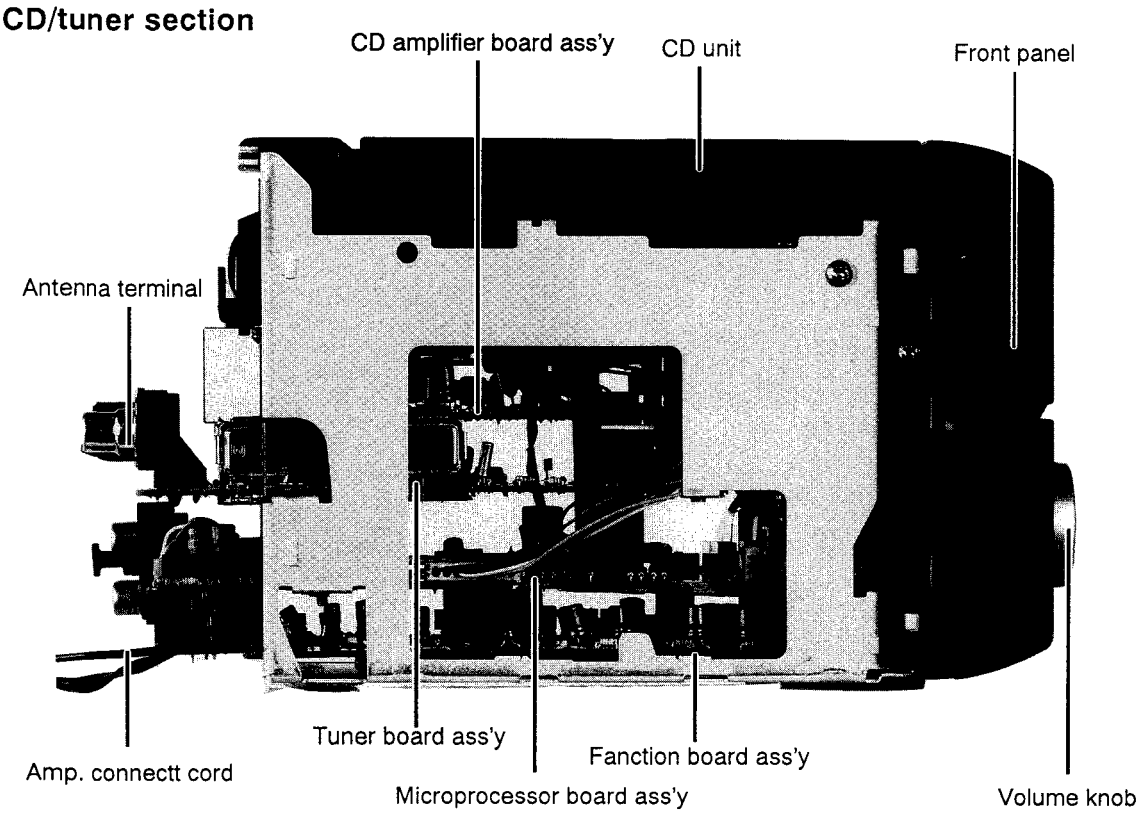

Fig. 1 – 1 (Left side view)

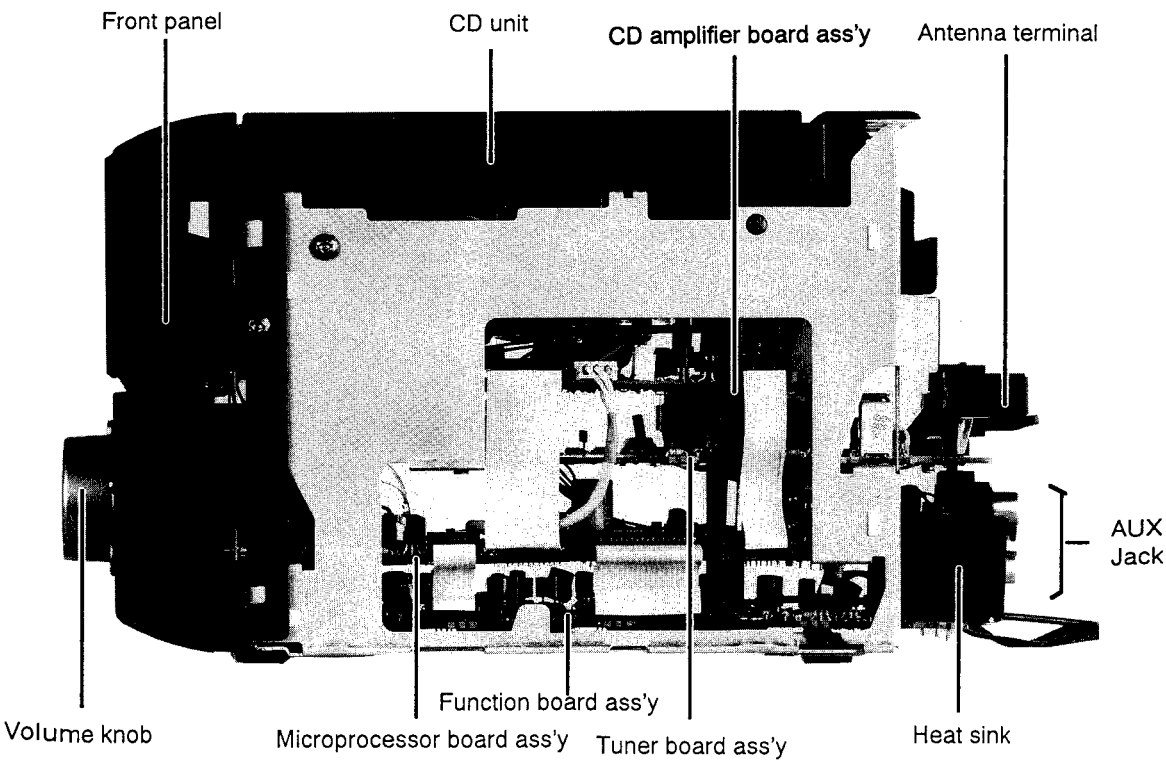

Fig. 1 – 2 (Right side view)

www.manualscenter.com

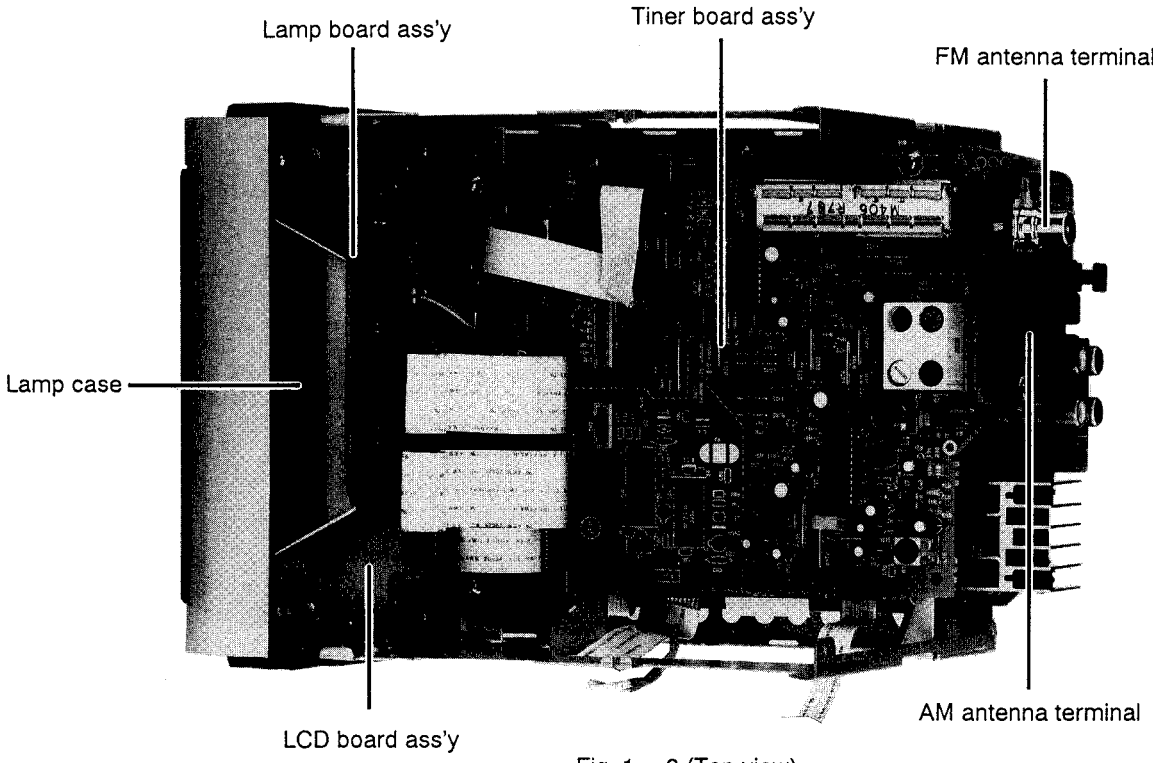

Fig. 1 – 3 (Top view)

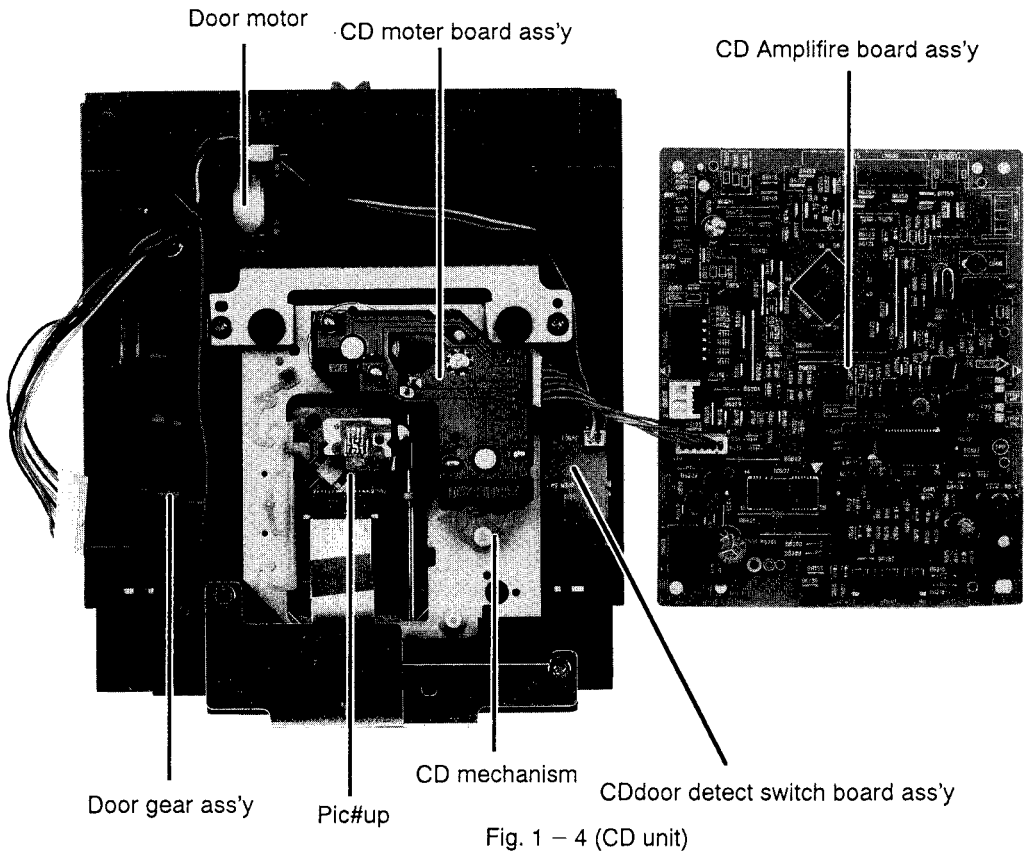

Fig. 1 – 4 (CD unit)

■ Cassette /power supply section

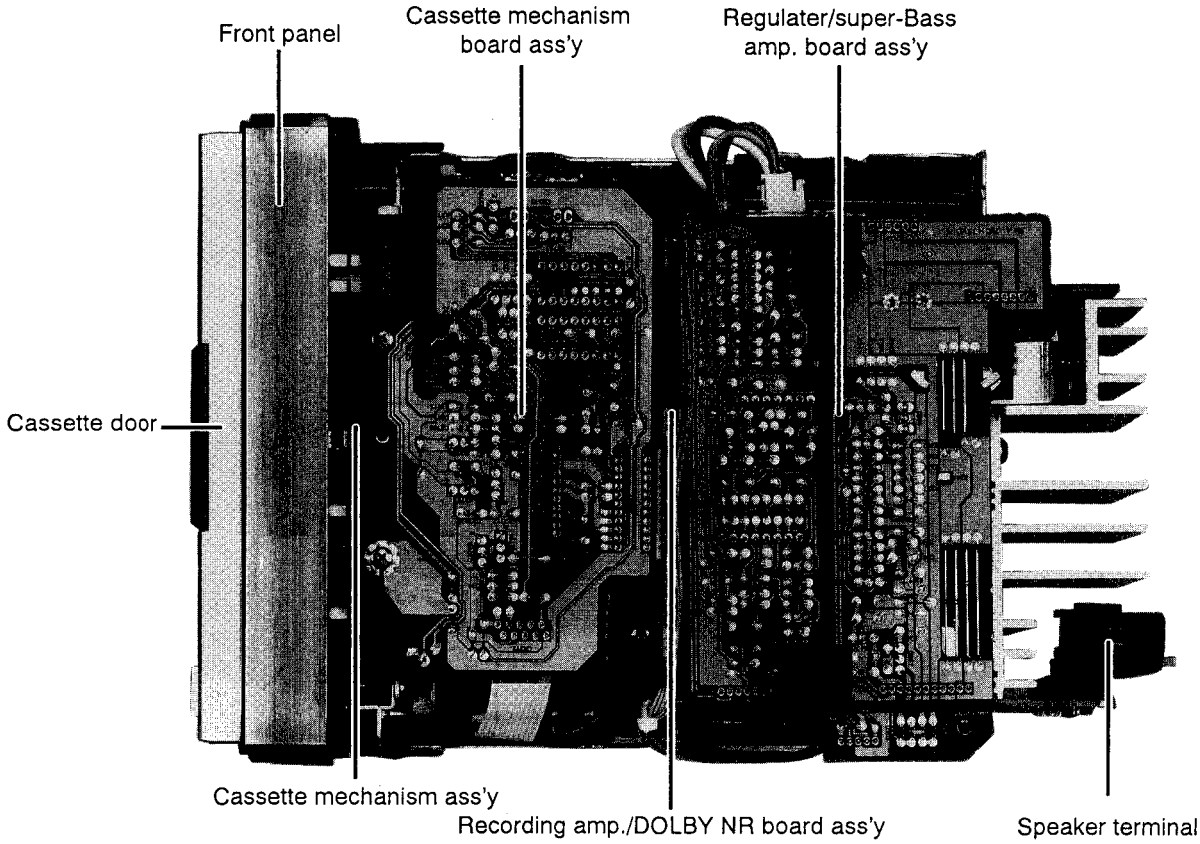

Fig. 1 – 5 (Top view)

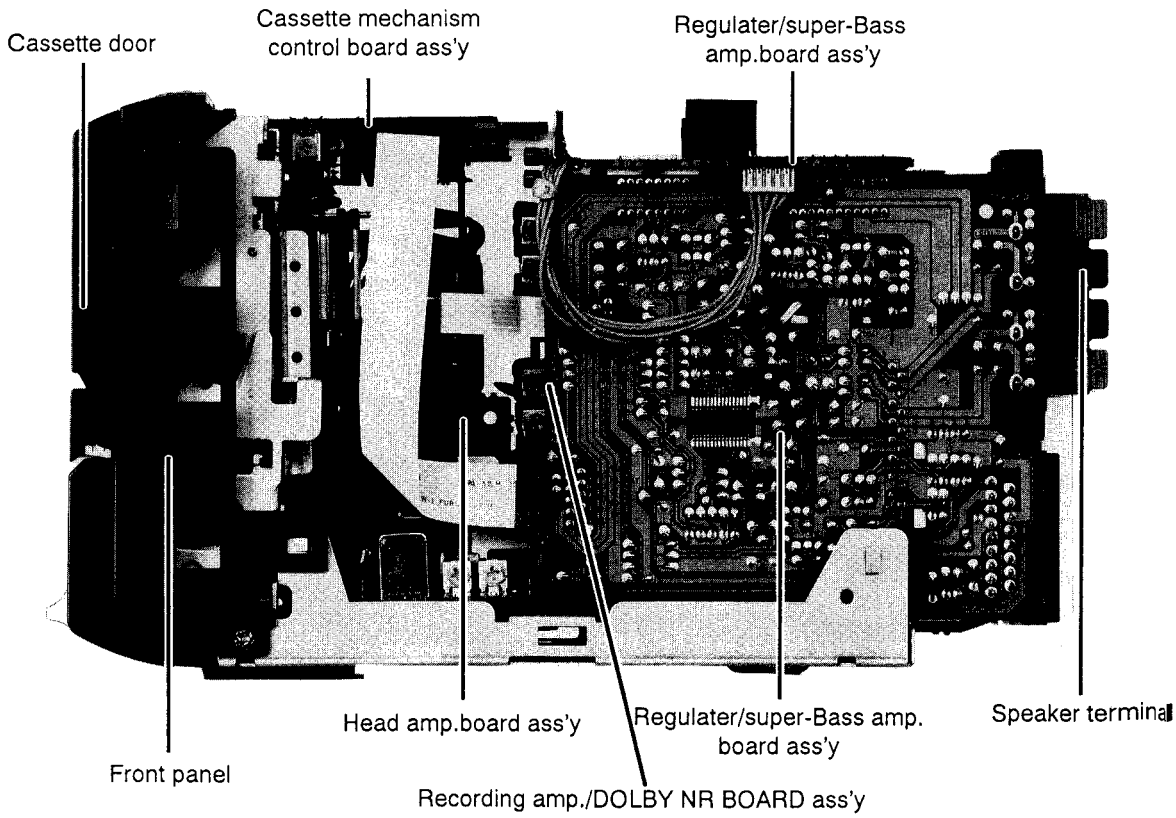

Fig. 1 – 6 (Right side view)

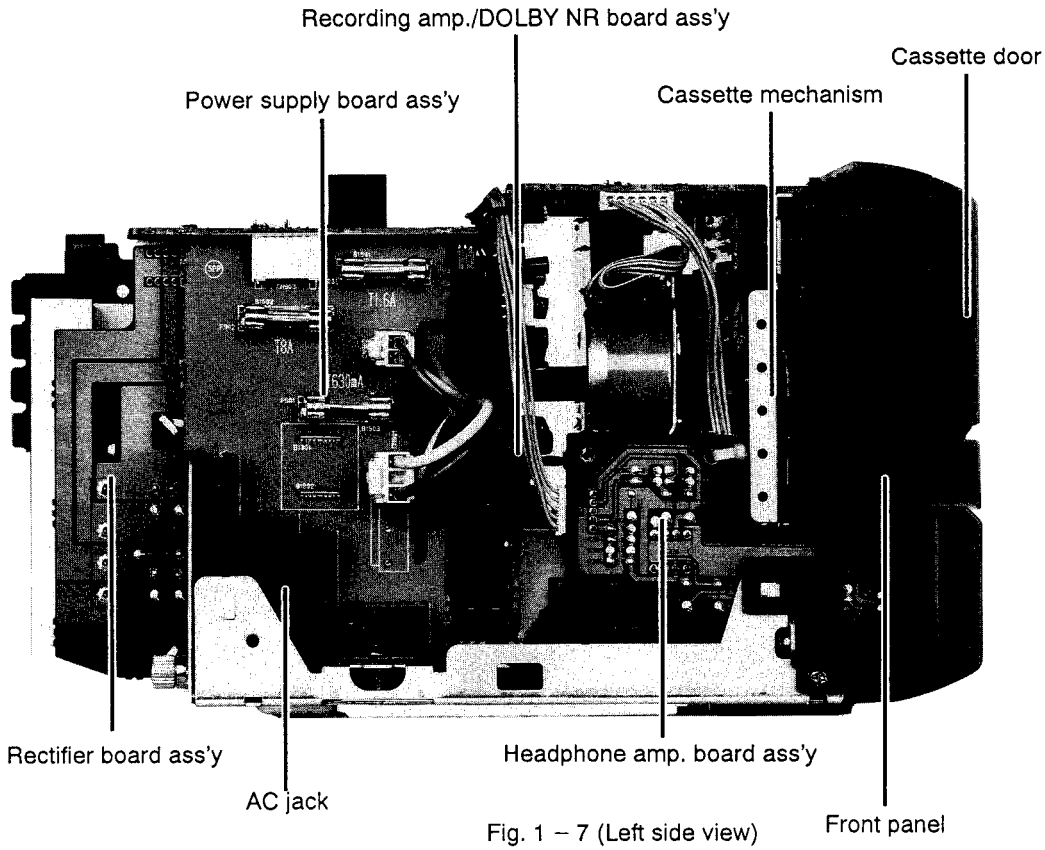

Fig. 1 – 7 (Left side view)

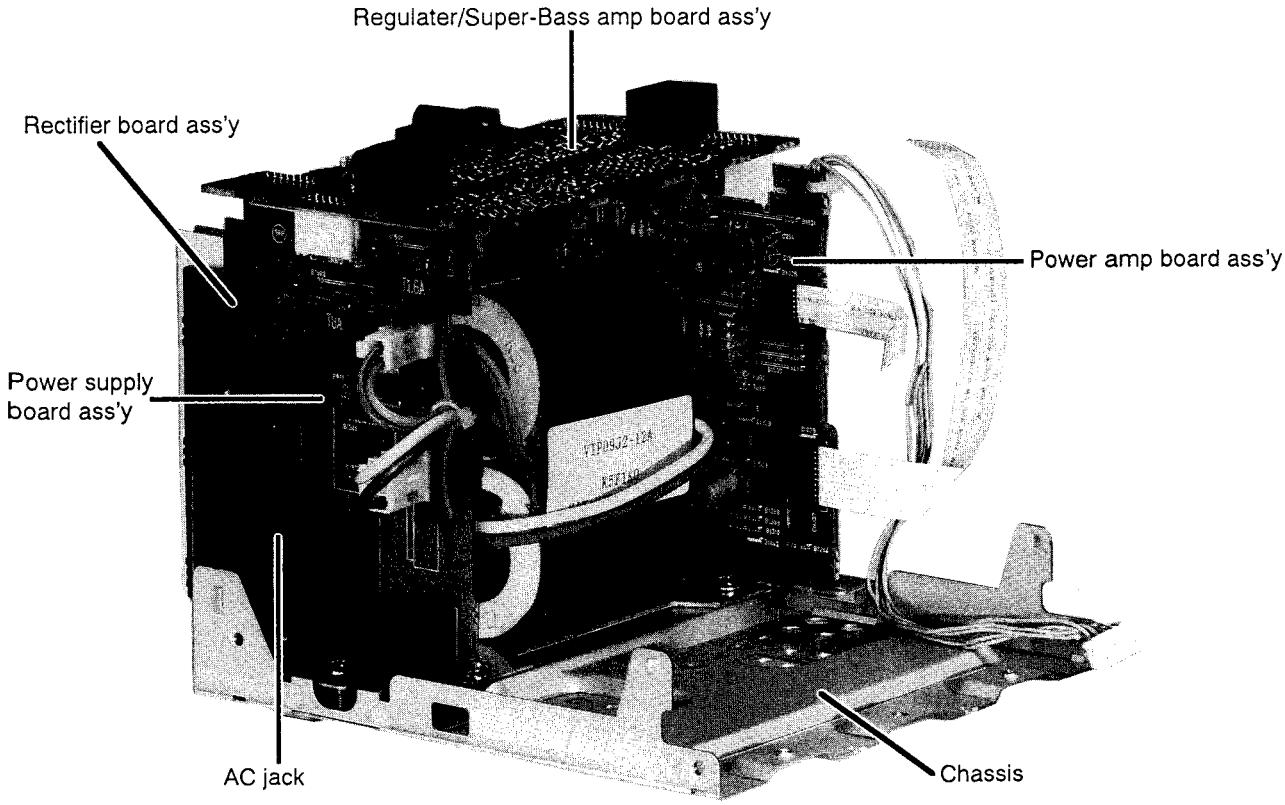

Fig. 1 – 8 (Power supply section)

www.manualscenter.com

■ Cassette mechanism section

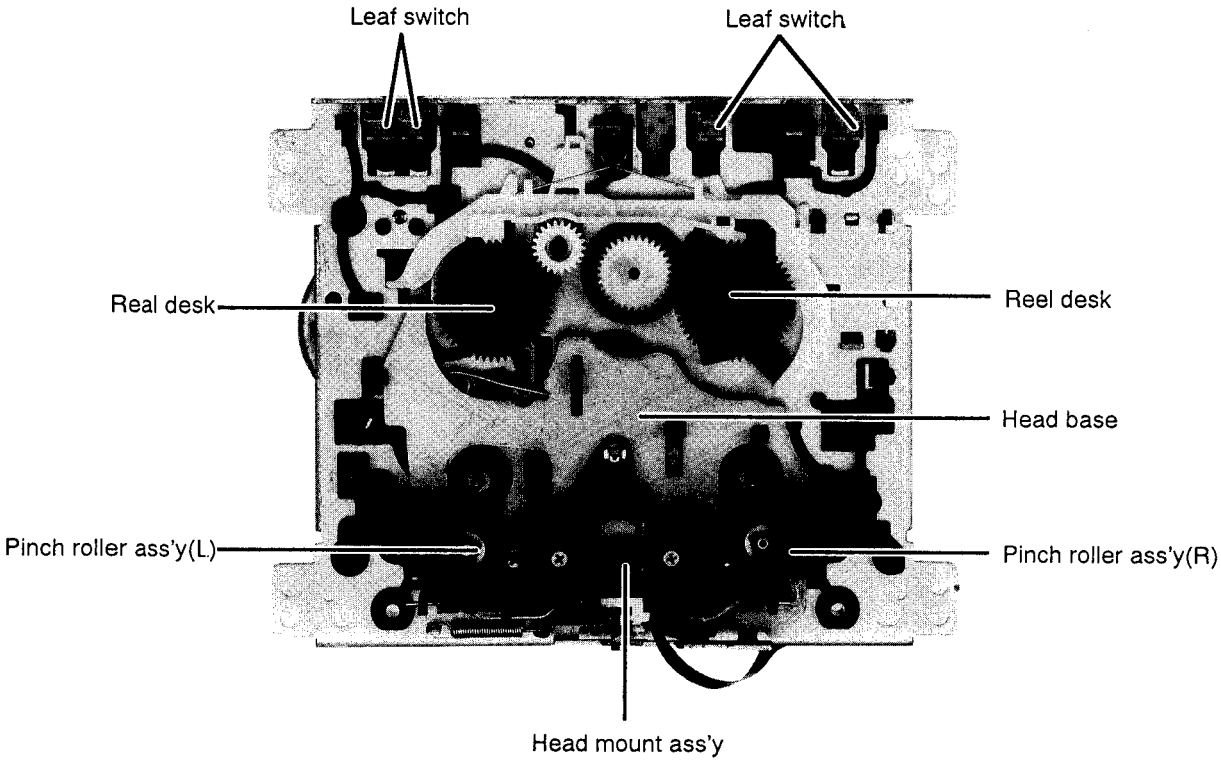

Fig. 1 – 9 (Top view)

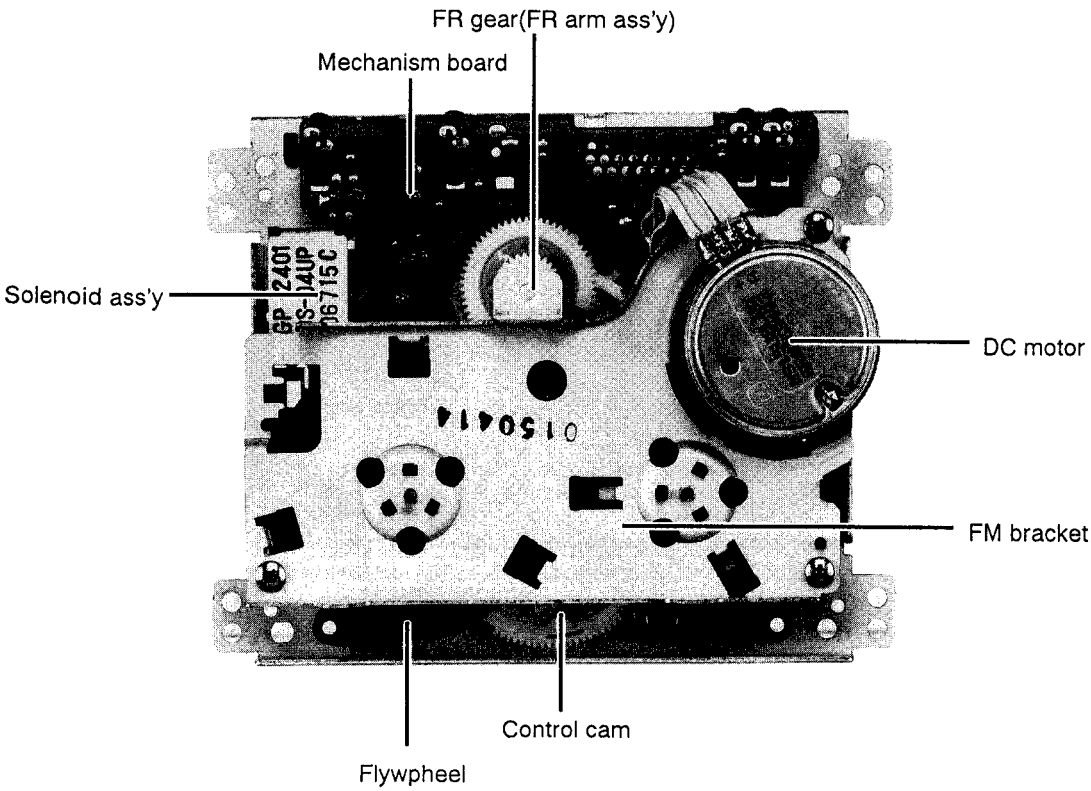

Fig. 1 – 10 (Bottom view)

2 Removal of main parts

■ CD/tuner section

◆ PC board layout and names of parts

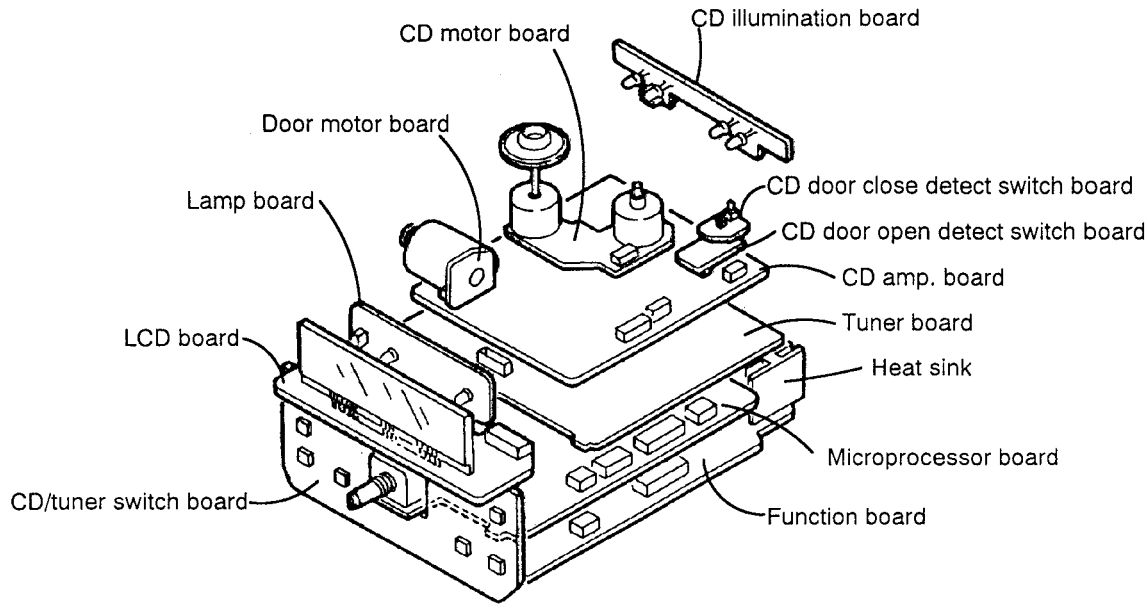

Fig. 2 – 1

◆ Side panels (See Figure 2-2)

1. Remove the four screws ㉑, mounting both side panels, from the rear.

◆ Connection cable cover (See Figures 2-2 and 2-3)

1. Remove the cover by sliding it in the direction of the arrow while pressing the two sections A.
2. Remove the four screws ㉒ and ㉓ mounting the speaker jackterminal and pin jack.
3. After removing the four hooks B on both sides of the rear cover, remove the rear cover.

Rear panel view

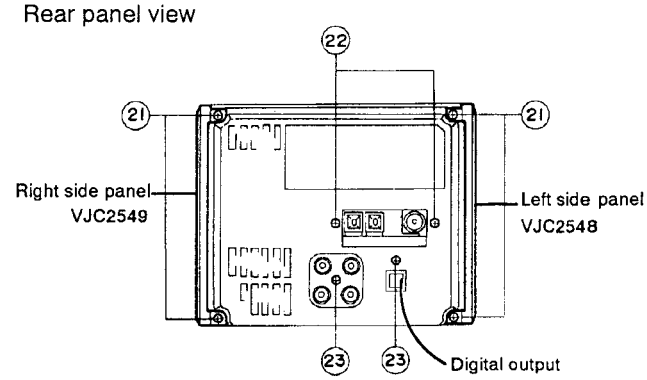

Fig.2 – 2

Rear side panel view

While pressing the tabs lightly, slide the cover in the direction of the arrow.

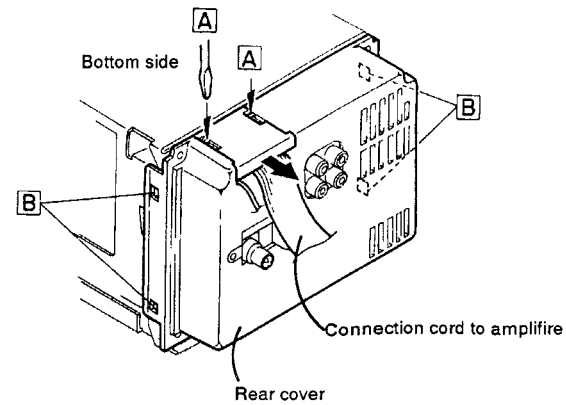

Fig. 2 – 3

◆ **CD unit** (See Figures 2-4 and 2-5)

1. Remove the two screws ㉔ retaining the CD unit to the chassis.
2. Remove the CN603, CN604 and CN605 from the CD PC board on the right of the unit.
3. Remove the CN811 from the microcomputer PC board on the left of the unit.
4. After removing the CD unit base studs [C] from the right and left of the chassis, pull up the CD unit.
5. Remove the CD unit by pulling it up toward the rear.

◆ **Front panel** (See Figure 2-6)

1. Pull out the volume knob. The knob will be removed with an optical fiber attached to it. Be careful not to lose it.
2. Remove the two electric volume mounting screws ㉕ from the front.
3. Remove the two screws ㊳ mounting the right and left of the front panel.
4. Remove the four hooks [D] on the right and left retaining the front panel to the chassis.

◆ **Tuner PC board assembly** (See Figure 2-7)

1. Remove the PC board assembly mounting screw ㉖.
2. Remove the PC Board Connector CN1.

◆ **Microcomputer PC board assembly**
(See Figure 2-8)

1. Remove the Connector CN801.
2. Remove the four PC board mounting screws ㉗.

◆ **Function PC board assembly** (See Figure 2-9)

1. Remove the four PC board mounting screws ㉘.

Right side view

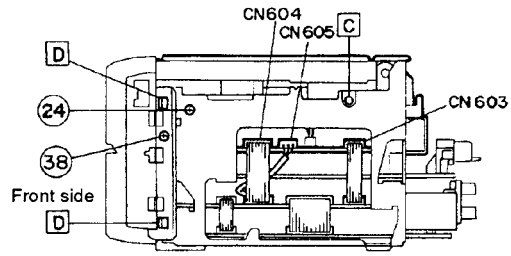

Fig. 2 – 4

Left side view

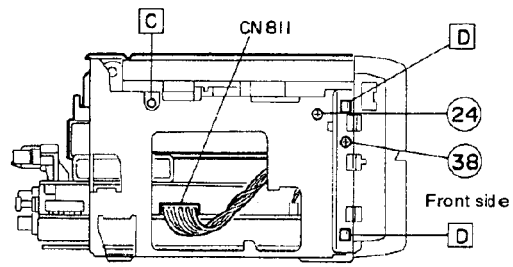

Fig. 2 – 5

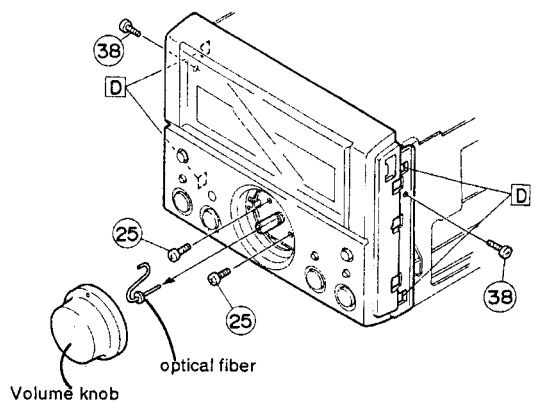

Fig. 2 – 6

Top view (with CD unit remove)

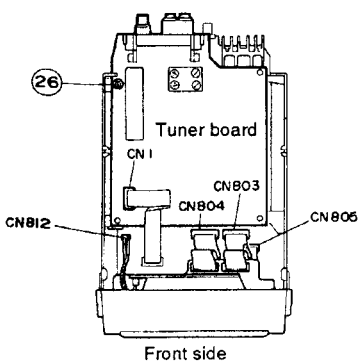

Fig. 2 – 7

Top view
(with tuner board ass'y remove)

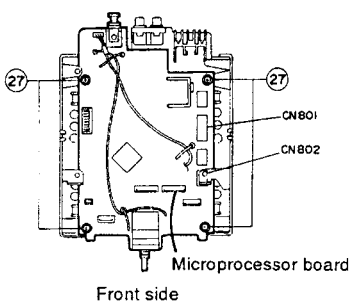

Fig. 2 – 8

Top view
(with microprocessor board remove)

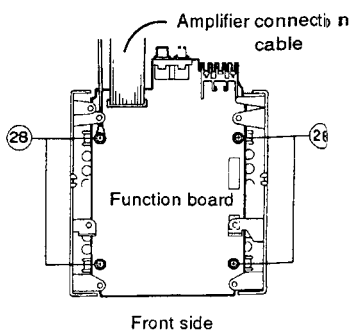

Fig.2 – 9

www.manualscenter.com

◆ **Front panel assembly** (See Figure 2-10)

● CD/tuner switch PC board assembly

1. Remove the six switch PC board assembly mounting screws ㉙.
2. The button can be removed by removing the PC board assembly.

● LCD indicator unit (See Figure 2-10)

1. Remove the two LCD unit mounting screws ㉚.

◆ **CD amp PC board assembly**

(See Figures 2-11 and 2-12)

1. Remove the three CD amp PC board assembly mounting screws 31.
2. After setting up the PC board assembly, remove the Connectors CN601 and CN602.
3. Remove the four mechanism holder mounting screws ㉜. Remove the CD mechanism by lifting it up in the direction of the arrow. (Pull out the turntable by removing it from the chassis.)

◆ **Illumination PC board assembly** (See Figure 2-12)

1. Remove the two illumination PC board assembly mounting screws ㉝.

◆ **Door open/close detect switch PC board assembly** (See Figure 2-12)

1. Remove the two door open/close detect switch PC board assembly mounting screws ㉞ and ㉟.

◆ **CD door gear unit** (See Figure 2-12)

1. Remove the two CD door gear unit mounting screws ㊱.
2. Remove the two door motor mounting screws ㊲.

Insid front panel

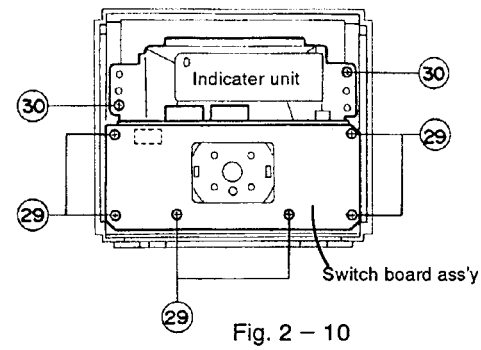

Fig. 2 – 10

CD unit board face

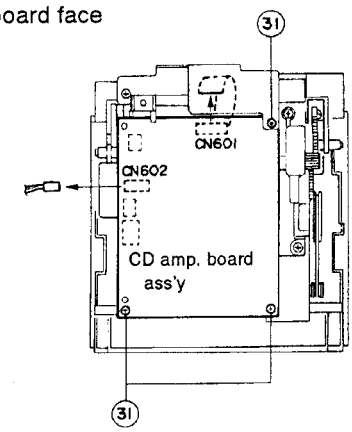

Fig. 2 – 11

CD mechanism section

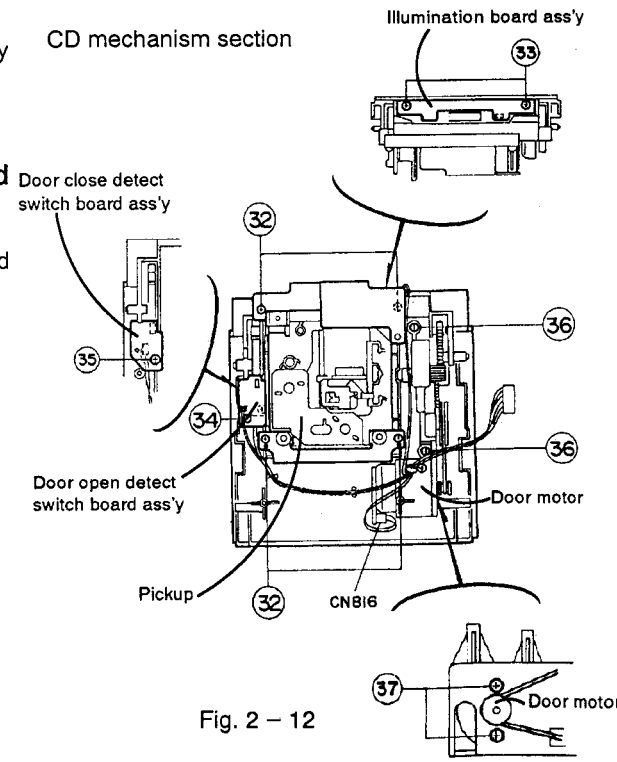

Fig. 2 – 12

■ Cassette deck/amplifier sections

◆ PC board layout and names of parts

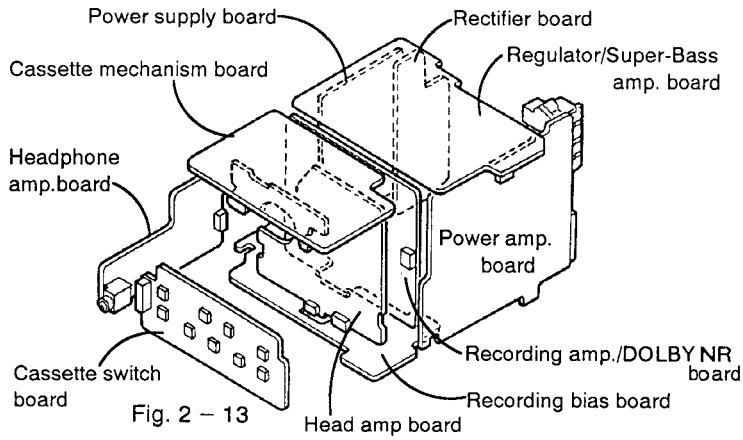

Fig. 2 – 13

◆ Top cover (See Figure 2-14)

1. Remove the two top cover mounting screws ① from the rear.
2. Remove the cover from the rear.

◆ Side panels (See Figure 2-14)

1. Remove the top cover.
2. Remove the two side panel mounting screws ② and ③ from the rear bottom.
3. The side panel can be removed by sliding it in the rear direction.
4. The fuse can be replaced by removing the left side panel. (The left and right side panels have a distinct shape, respectively. While observing the marking on the inside of each panel, install them properly following the Figure 2-14.)

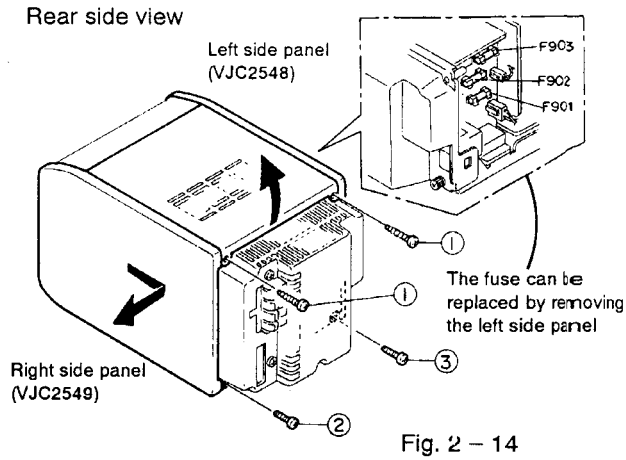

Fig. 2 – 14

◆ Separating the cassette mechanism unit section from the power supply unit section

(See Figures 2-15 to 2-17)

1. Remove the top cover and both side panels.
2. Remove the CN321 from the right side of the recording amp/Dolby NR PC board assembly. Also remove the headphone wire holder connected to the CN381.
3. Remove the CN372 from the right side of the mechanism control PC board assembly.
4. Remove the three screws ④ retaining the front panel assembly to the chassis, from the bottom.
5. After removing the hooks Ⓐ and Ⓑ on the right and left of the front panel, remove the cassette mechanism unit toward the front.

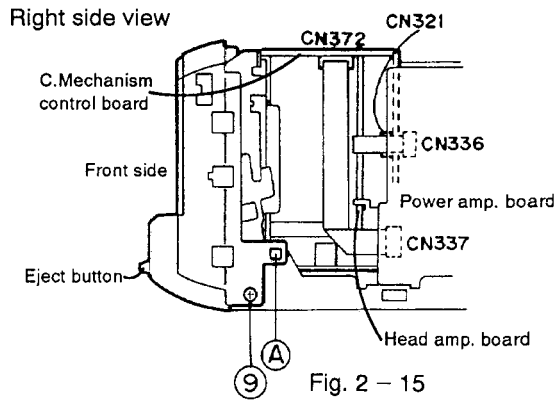

Fig. 2 – 15

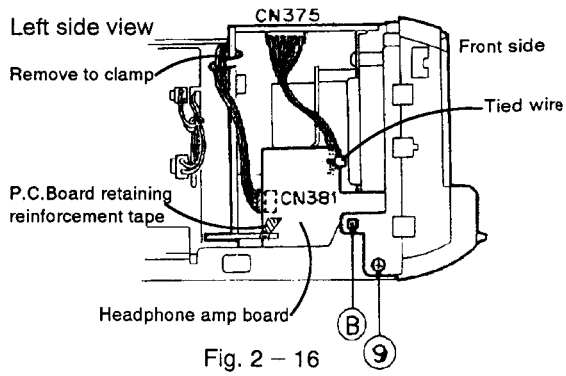

Fig. 2 – 16

www.manualscenter.com

■ How to remove the cassette mechanism unit

◆ Front panel assembly (See Figures 2-18 and 2-19)

1. Open the cassette door.
2. Remove the door cover by lifting it up.
3. After cutting off the tied wire of the cassette switch PC board from the headphone PC board, remove the CN375 from the mechanism control PC board.
4. Remove the four screws ⑤ retaining the four corners of the mechanism.
5. Remove the front panel by taking it out through the cassette holder.

◆ Recording amp/Dolby NR PC board assembly

(See Figure 2-19)

1. Remove the two PC board assembly mounting screws ⑥.

◆ Mechanism control PC board assembly

(See Figure 2-20)

1. Remove the recording amp/Dolby NR PC board assembly.
2. Remove the two mechanism control PC board assembly mounting screws ⑦.
3. Remove the Connector CN375 connected to the cassette switch PC board.
4. Remove the CN371 and CN373 while pulling up the mechanism control PC board assembly.

Bottom view

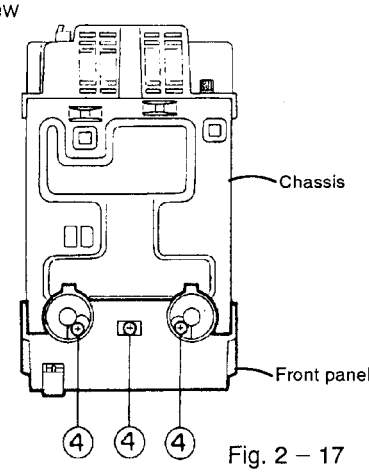

Fig. 2 – 17

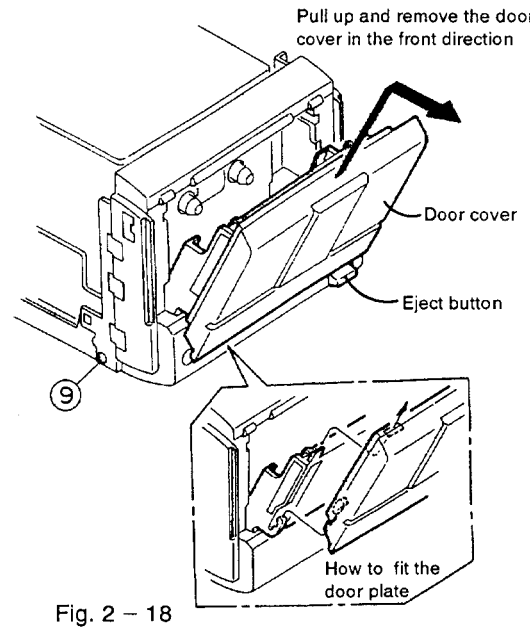

Fig. 2 – 18

Cassette section rear view

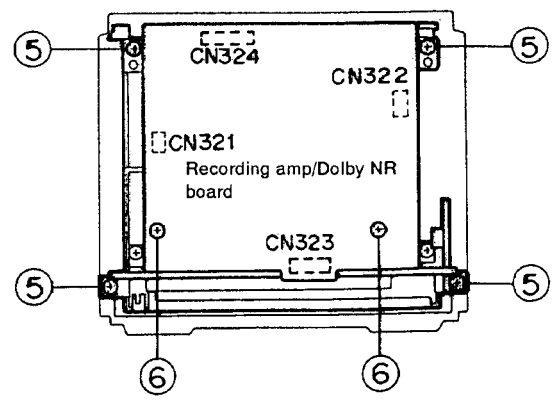

Fig. 2 – 19

Cassette section top view

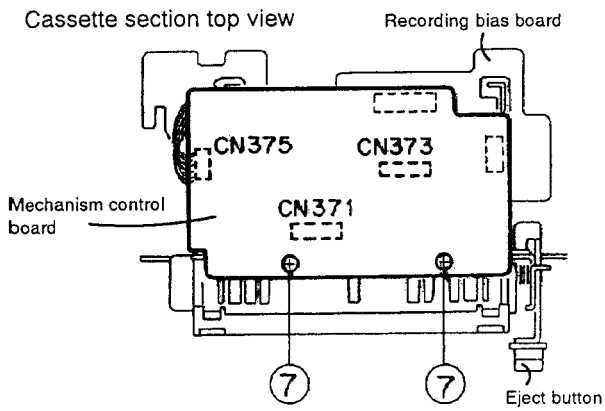

Fig. 2 – 20

◆ Head amp PC board assembly

(See Figures 2-21 and 2-22)

1. Remove the recording amp/Dolby NR PC board assembly and mechanism ontrol PC board assembly.
2. Remove the head flexible wire from the head amp PC board assembly on the bottom.
3. Remove the head amp PC board assembly mounting screw ⑧, which allows the PC board assembly to slide in the downward direction. In this state, remove the hook Ⓒ in order to remove the PC board assembly.

■ Amplifier/power unit section (See Figure 2-23)

◆ Rear cover

1. Remove the three rear cover mounting screws ⑩ and ⑪.
2. Remove the two hooks Ⓓ and Ⓔ on both sides.

◆ Regulator/Super-Bass amp PC board assembly

(See Figures 2-24 and 2-26)

1. Remove the regulator/Super-Bass amp PC board assembly and heat sink mounting screw ⑫.
2. While lifting up the PC board assembly, remove the four PC Board Connectors CN331, CN332, CN333 and CN334.

◆ Power supply PC board assembly

(See Figure 2-26)

1. Remove the AC socket mounting screw ⑬.

Heat sink

1. Remove the four heat sink mounting screws ⑭ and ⑮.

◆ Power amp PC board assembly (See Figure 2-24)

1. Remove the power amp IC and heat sink mounting screw ⑯. (By this time, ⑮ must have been removed.)
2. The power amp PC board assembly can be removed by lifting it up.

◆ Power transformer (See Figure 2-25)

1. Remove the four power transformer mounting screws ⑰. (By this time, the amp PC board assembly must have been removed.)

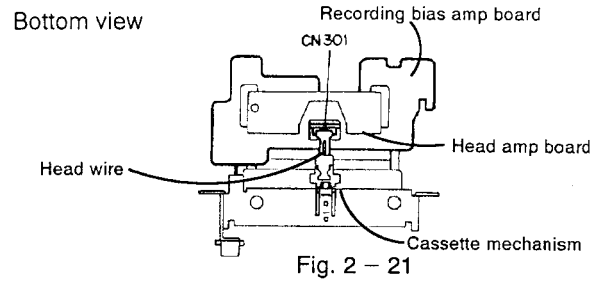

Fig. 2 – 21

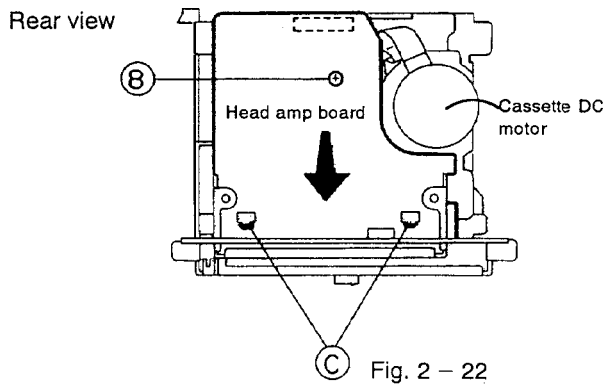

Fig. 2 – 22

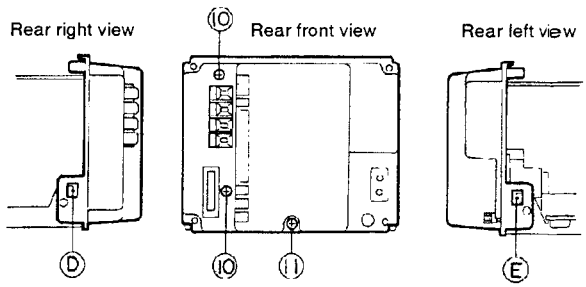

Fig. 2 – 23

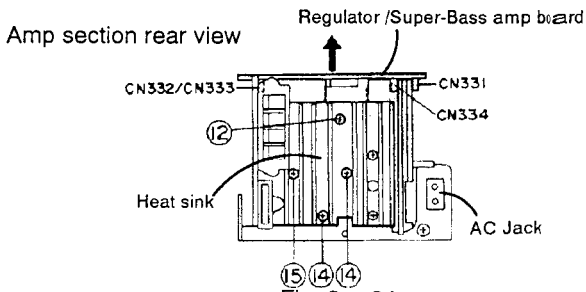

Fig. 2 – 24

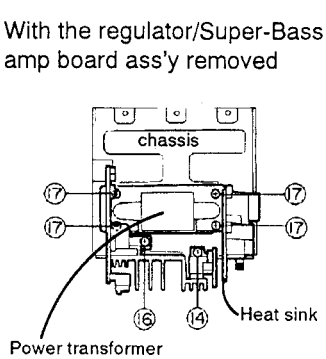

Fig. 2 – 25

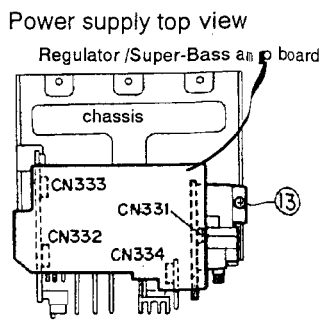

Fig.2 – 26

www.manualscenter.com

■ How to disassemble the cassette mechanism

◆ Head mount assembly (See Figure 2-27)

1. Remove the three head mount assembly mounting screws ①.
2. Remove the head wire holder from the chassis.

★ After replacing the head mount, adjust the angle of the head.

● How to engage the gear section of the direction lever with the head mount gear during assembly is illustrated on the right.

◆ Pinch roller assembly (See Figure 2-28)

Right

1. After opening the pinch roller assembly retaining tab Ⓐ outwards, pull out the pinch roller assembly.

● When assembling, the studs, located under the pinch roller, must be inserted between the direction lever and pinch roller spring.

Left

1. Perform the same procedure for the right as shown above.

◆ Capstan motor and flywheel assembly

(See Figures 2-29 to 2-31)

1. Remove the three FM bracket assembly mounting screws ②.
2. Open outwards and remove the two FM bracket retaining tabs Ⓑ.
3. The capstan belt, flywheel and other related parts can be removed with the FM bracket pulled up slightly. Since, at this time, the reel belt between the flywheel and main pulley will be hooked on the FM bracket, remove the belt using a tool which will not damage the belt. If the flywheel is hooked on the FM bracket, remove them together as they are.

Cassette mechanism top view

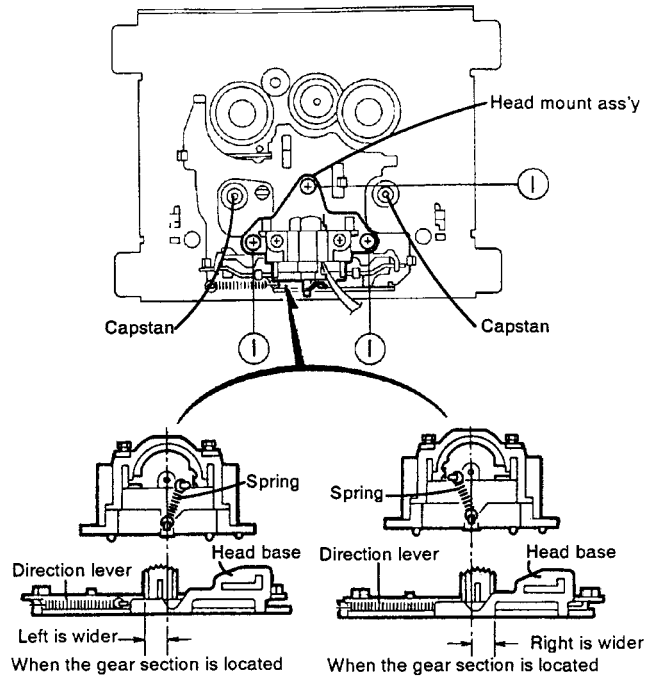

Fig. 2 – 27

Pinch roller section

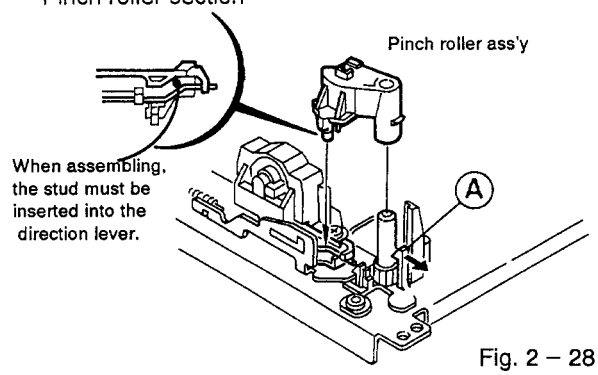

Fig. 2 – 28

Cassette mechanism top view

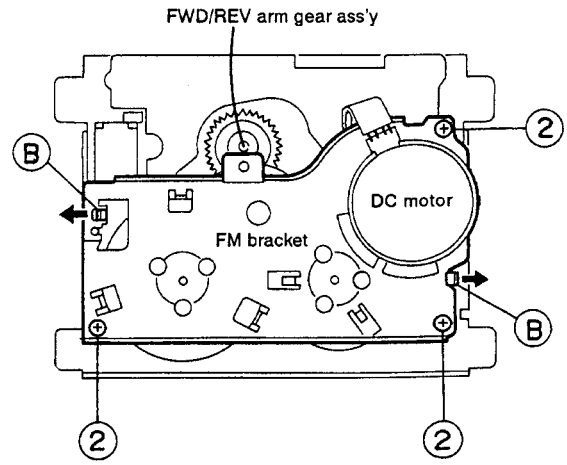

Fig. 2 – 29

1. Set the flywheel shaft into the thrust guide.
2. Hook the flywheel on the FM bracket with tabs ⓐ and ⓑ.
3. After setting the notch ⓒ on the round of the flywheel through the corresponding tab on the FM bracket, turn the flywheel.

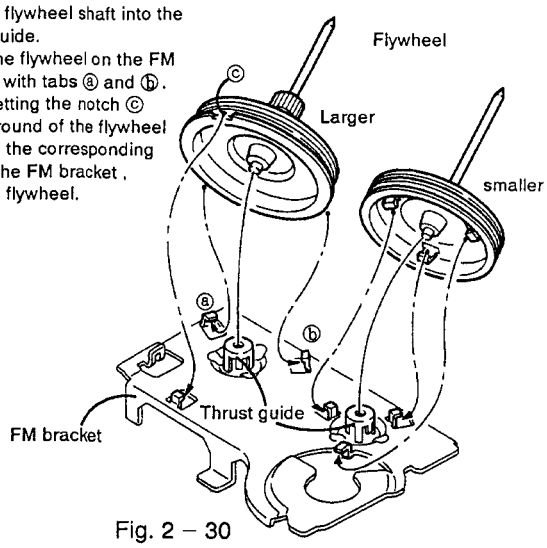

Fig. 2 – 30

Belt location

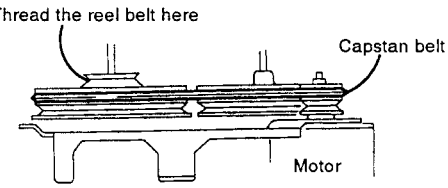

How to thrad the belt

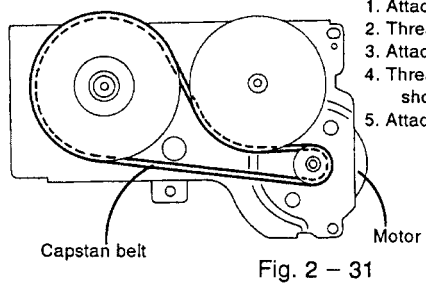

How to assemble the FM bracket

1. Attach the larger flywheel.
2. Thread the belt
3. Attach the smoaller flywheel.
4. Thread the reel belt as shown below.
5. Attach to the mechanism ass'y

Fig. 2 – 31

● How to assemble

1. Attach the larger flywheel on the FM bracket as shown.
2. Thread the capstan belt.
3. Attach the smaller flywheel.
4. Thread the reel belt onto the mechanism assembly studs as shown. At this time, be careful that the belt is not twisted.
5. With the FM bracket turned upside down, insert the capstans into the capstan metals.
6. Take off the reel belt from the studs and thread it onto the flywheel. (Check that the belt is not twisted.)

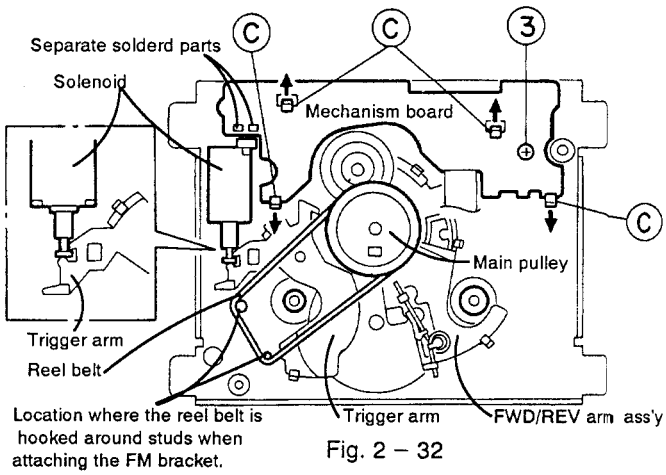

Fig. 2 – 32

◆ Mechanism PC board assembly (See Figure 2-32)

1. When the solenoid is not removed, separate the soldered parts of the PC board on the solenoid terminal.
2. Remove the PC board mounting screw ③.
3. Remove the four PC board assembly retaining tabs Ⓒ.
4. In this state, the PC board can be removed. The hall IC, S6 relay and other related parts can be replaced. The leaf switch can be replaced without removing the PC board.

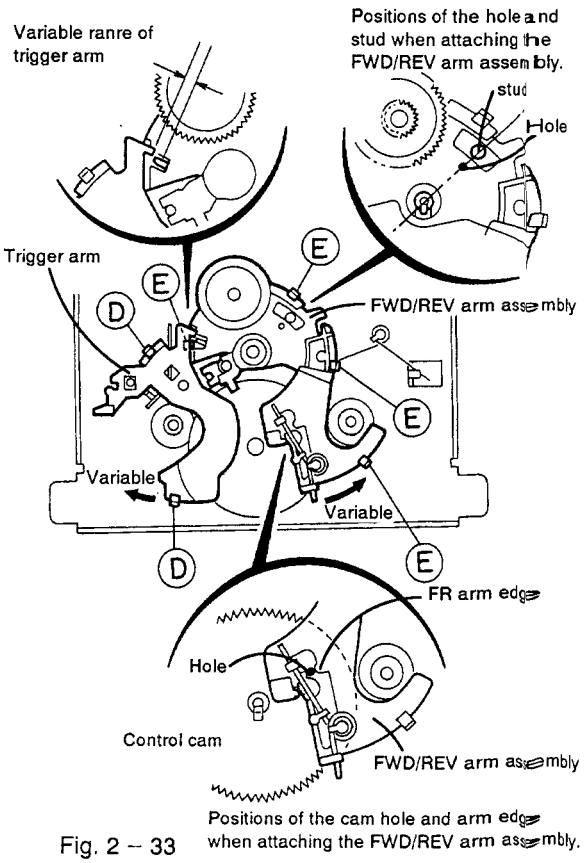

Fig. 2 – 33

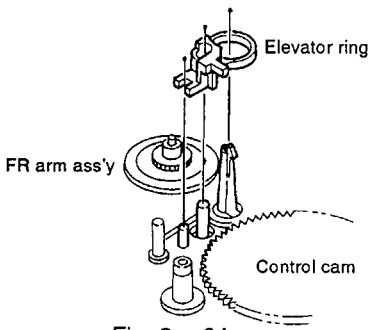

Fig. 2 – 34

www.manualscenter.com

◆ **Control cam** (Figures 2-33 to 2-38)

1. Remove the FM bracket and flywheel.
2. Pull out the main pulley.
3. Remove the trigger arm.
   While opening the two tabs Ⓓ under the trigger arm, pull out the trigger arm from the shaft.
4. Pull out the elevator ring.
5. Remove the FWD/REV arm assembly.
   a. Remove the FWD/REV arm spring.
   b. While opening the four FWD/REV arm retaining tabs Ⓔ outwards, pull out the FWD/REV arm.
6. Pull out the control cam.
   While pulling the shaft stopper section of the control cam in the central direction, pull out the control cam.

● **How to assemble**

1. Move the FWD/REV arm in the direction of the arrow.
2. In step 1, pull the head base forward.
3. In step 2, after inserting the cam into the shaft, move the head base and FWD/REV arm slightly until the cam is fully inserted and it clicks to inform when it has been locked.
4. Rotate the cam counterclockwise to check if the cam rotates smoothly and the spring clicks according to the forward/backward movement of the head base.
5. After checking the rotation of the cam, rotate the cam until the notch section comes to the right so that the FWD/REV arm assembly can be attached.
6. Attach the FWD/REV arm assembly while observing the positioning of:
   the hole and stud
   the cam hole and arm edge
   shown in the Figure 2-33.
   After attachment, move the FWD/REV arm in the direction of the arrow to check if it moves back to the original position.
7. Attach the elevator ring.
8. Attach the trigger arm.
   After attachment, move the trigger arm in the direction of the arrow to check if it moves back to the original position.

When attaching the control cam

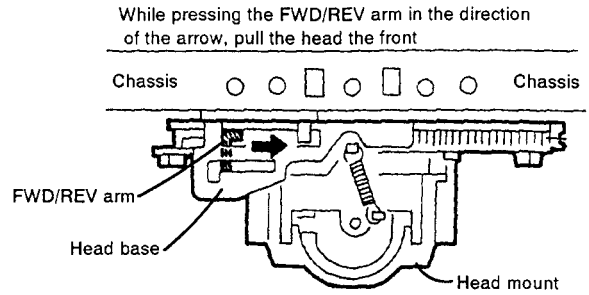

Fig. 2 – 35

After preforming the procedure shown above,the studs under the control cam move as shown.

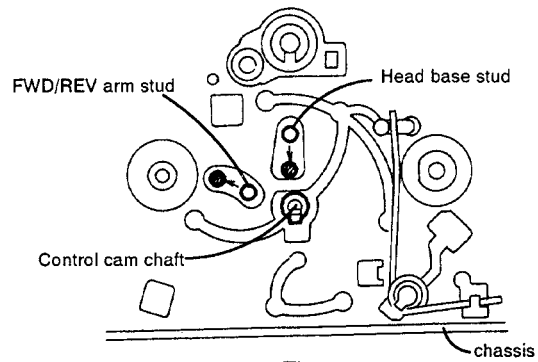

Fig. 2 – 36

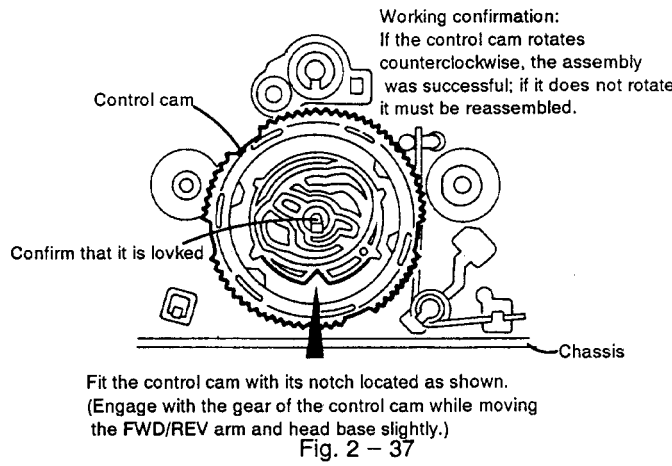

Fig. 2 – 37

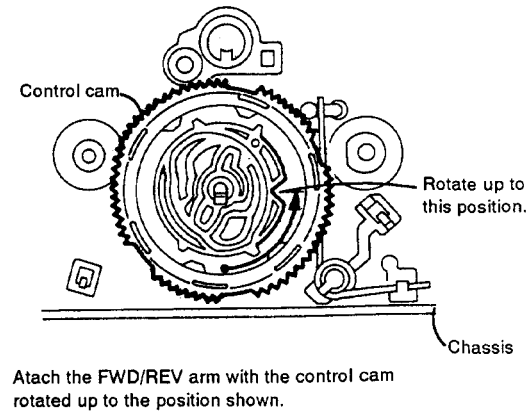

Fig. 2 – 38

3 Traubleshooting

■ Pickup maintenance

(1) Checking the service life of laser diode

If a laser diode reaches the end of its service life, the following phenomena will show up. Similar symptoms may also appear when the pickuplens becomes too dirty. In this case, clean the lens.

1) The RF output (between IC601 ⑦ and ⑱ (GND)) lowers.
2) The driving current, necessary for the laser diode to emit lights, increases. (Calculate from the voltage level at both ends of the R614 at 10 Ω .)

◆ Following the flow chart shown below, check the service life.

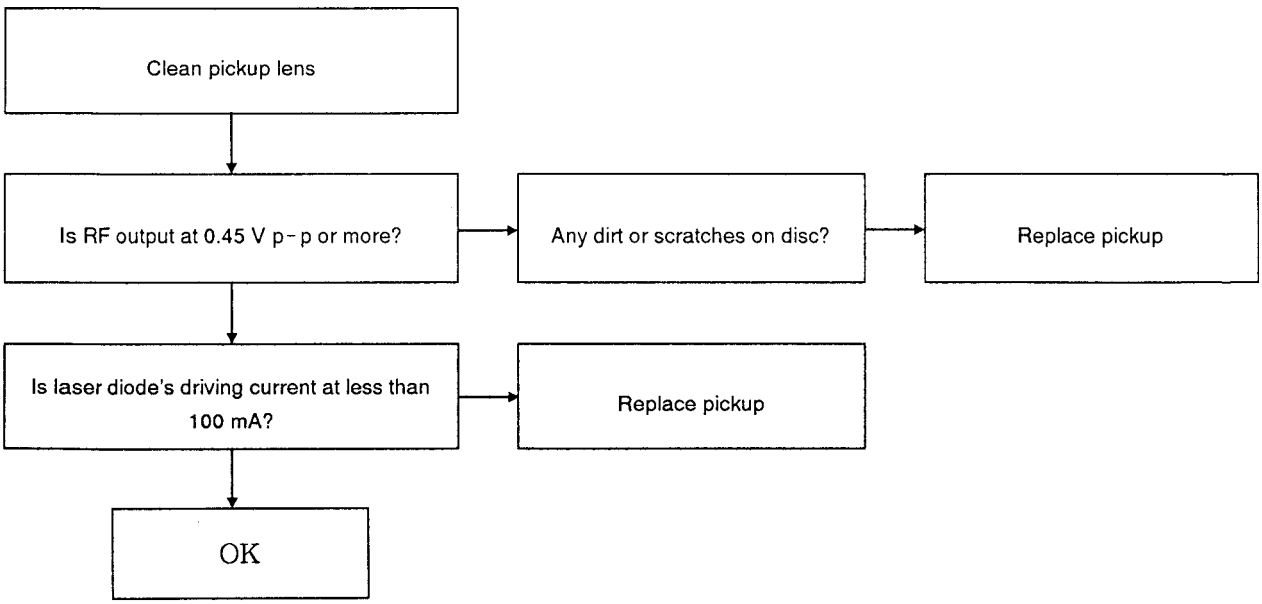

◆ How to measure laser diode's driving current

After connecting a voltmeter at both ends of the R614(10 Ω), measure the voltage during playback. If the voltage level is at 1.0 V or more, the service life of the laser diode has expired.

Laser diode's driving current (A)
= Voltage level at both ends of R614 (V)/10 (Ω)
When voltage level is at 1.0 V:
1.0 V/10 Ω = 0.1 A = 100 mA

Note:
The laser diode easily breaks down. Be sure to turn the power off before connecting a voltmeter.

www.manualscenter.com

◆ HOW TO OPERATE THE CD SELF-DIAGNOSIS FUNCTION

◆ The CD Self-diagnosis Function

If any malfunction occurs in the CD player, this system can be set to make an error code indication appear on the LCD to point out the defective parts. This efficiently helps service personnel find the causes of the malfunction.

1. Operation

[1] Press the three [◀◀], [+10] and [POWER] buttons on the remote control to enter the Test mode. (Then the illuminating portions of the LCD all light up together. This indicates that the system has entered the Test mode.)

[2] Play a CD. If the operation is defective in any way, an error code should appear on the LCD.

[3] Identify the point of malfunction in accordance with the error code displayed.

2. Error codes & defective points

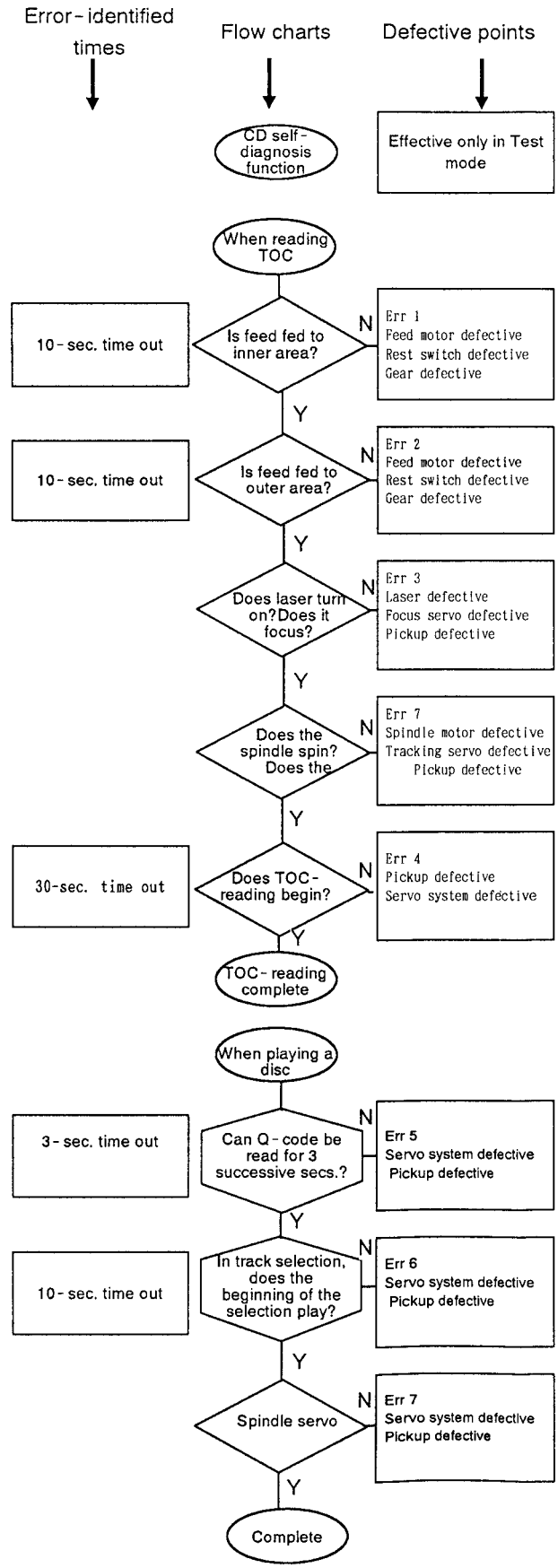

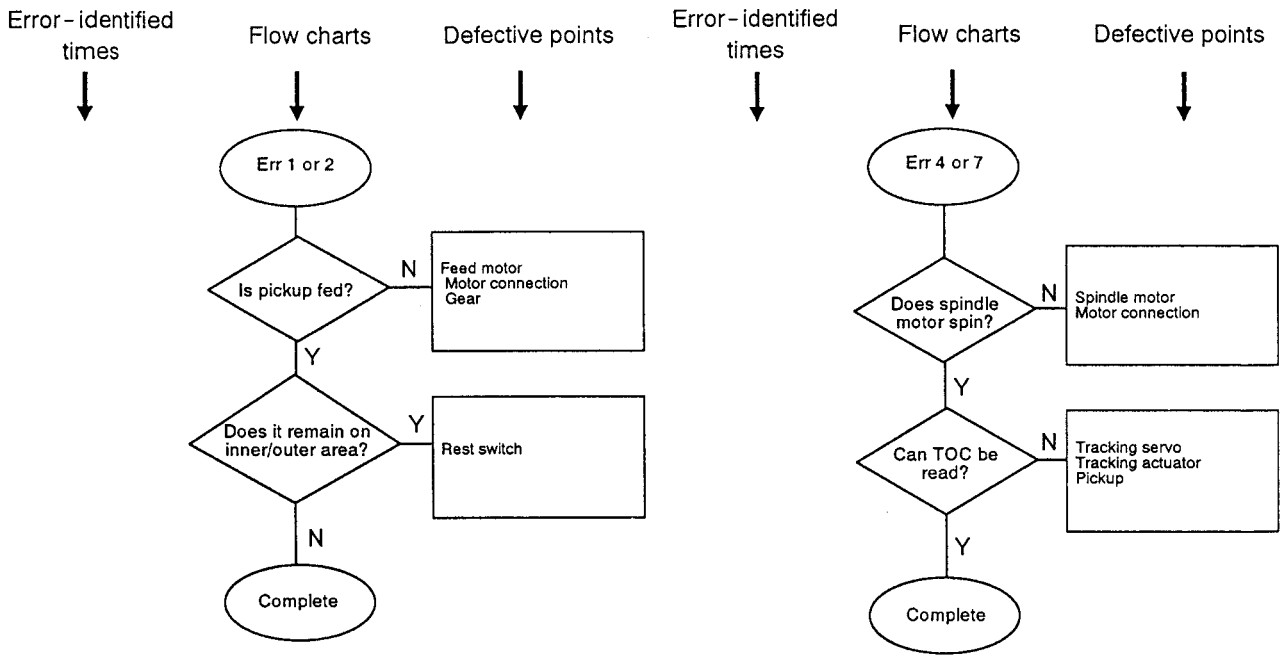

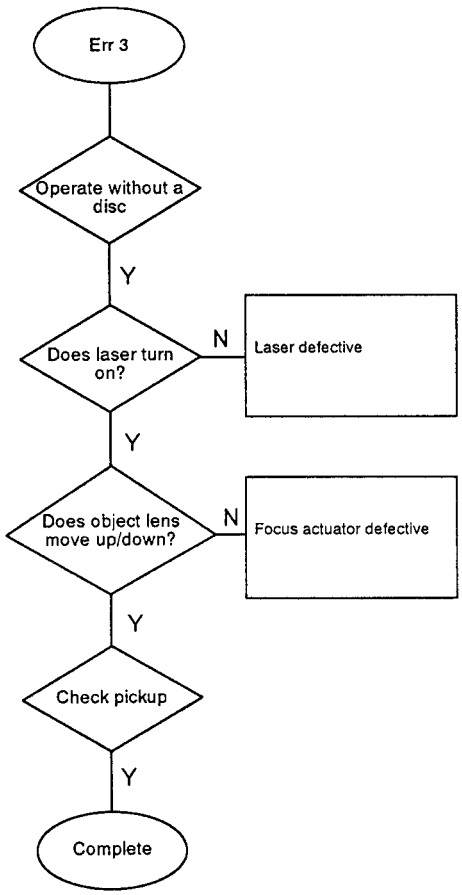

www.manualscenter.com

◆ General

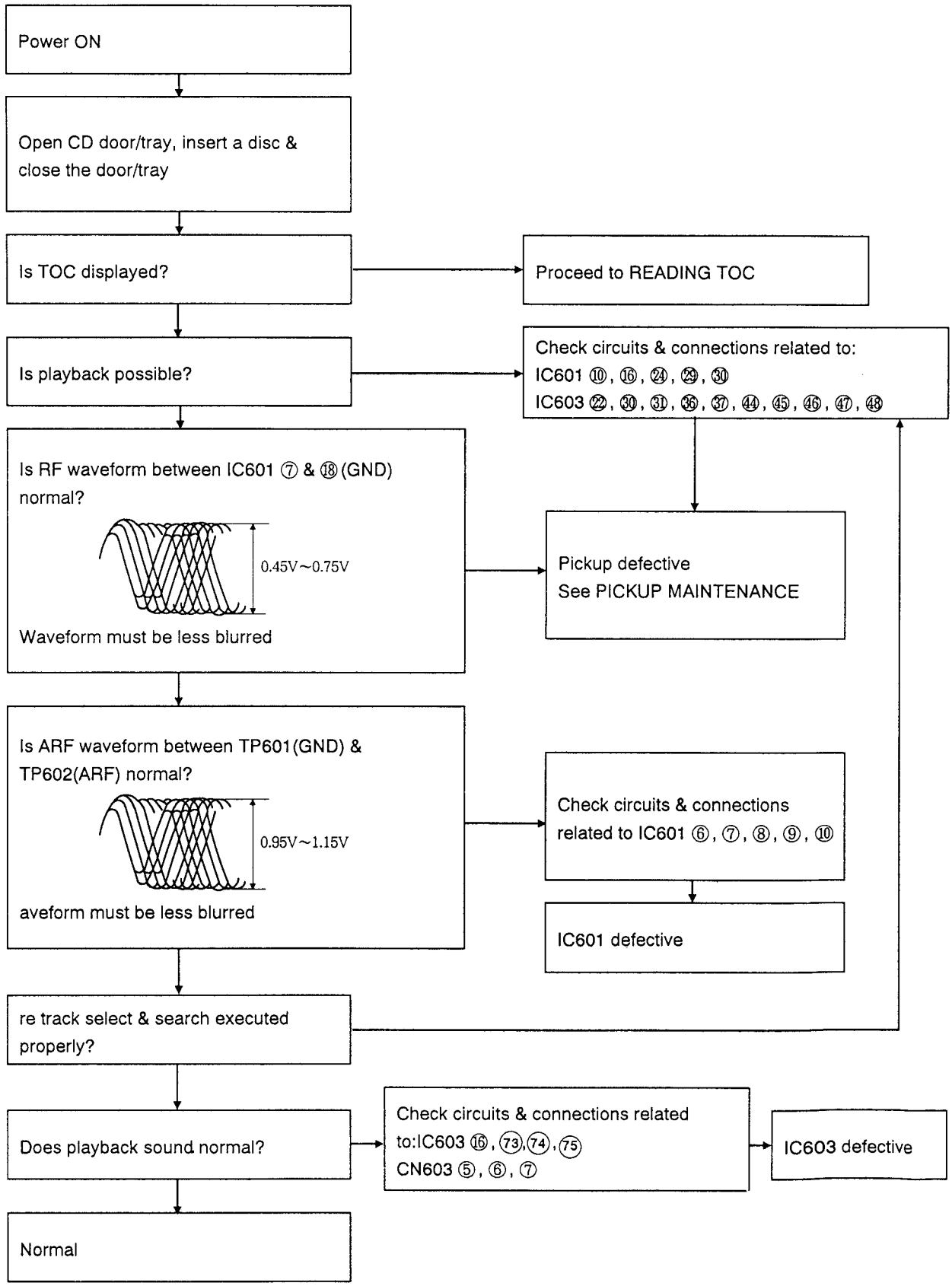
Power ON
Open CD door/tray, insert a disc & close the door/tray
Is TOC displayed?
Proceed to READING TOC
Is playback possible?
Check circuits & connections related to:
IC601 ⑩, ⑯, ㉔, ㉙, ㉚
IC603 ㉒, ㉚, ㉛, ㊱, ㊲, ㊹, ㊺, ㊻, ㊼, ㊽
Is RF waveform between IC601 ⑦ & ⑱ (GND) normal?
0.45V~0.75V
Waveform must be less blurred
Pickup defective
See PICKUP MAINTENANCE
Is ARF waveform between TP601(GND) & TP602(ARF) normal?
0.95V~1.15V
aveform must be less blurred
Check circuits & connections related to IC601 ⑥, ⑦, ⑧, ⑨, ⑩
IC601 defective
re track select & search executed properly?
Does playback sound normal?
Check circuits & connections related to:IC603 ⑯, 73, 74, 75
CN603 ⑤, ⑥, ⑦
IC603 defective
Normal

◆ Reading TOC

After opening & closing CD door/tray again with a disc inserted, does the disc spin?

N → Proceed to FOCUS SEARCH

Y ↓

Just after opening & closing CD door/tray again, do the waveforms shown below appear?

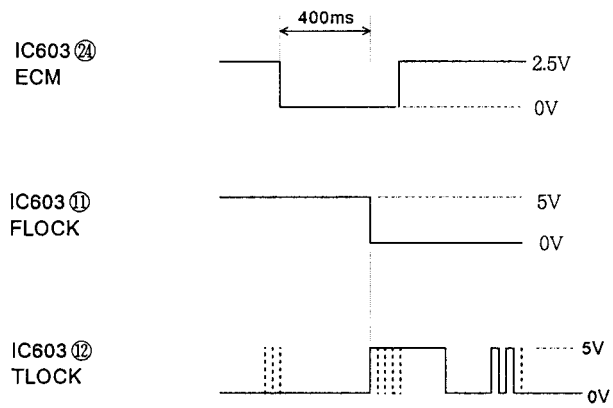

N →

Y ↓

Check circuits & connections related to:
IC601 ⑥, ⑦, ⑧, ⑩
IC603 ㉕, ㊹, ㊺, ㊻, ㊼, ㊽
CN604 ⑧, ⑨

OK ↓

If IC603 ⑪ waveform is abnormal
Check circuits & connections related to:
CN601 ①, ②, ④, ⑤
IC601 ㉗, ㉘, ㉟, ㊱
If IC603 ⑫ waveform is abnormal
Check circuits & connections related to:
CN601 ③, ⑦, ⑬, ⑭
IC601 ㉕, ㉖, ㉝, ㉞
IC603 ㉗, ㉝
IC602 ㉔, ㉖, ㉗

OK ↓

Pickup defective
See PICKUP MAINTENANCE

www.manualscenter.com

◆ Focus search

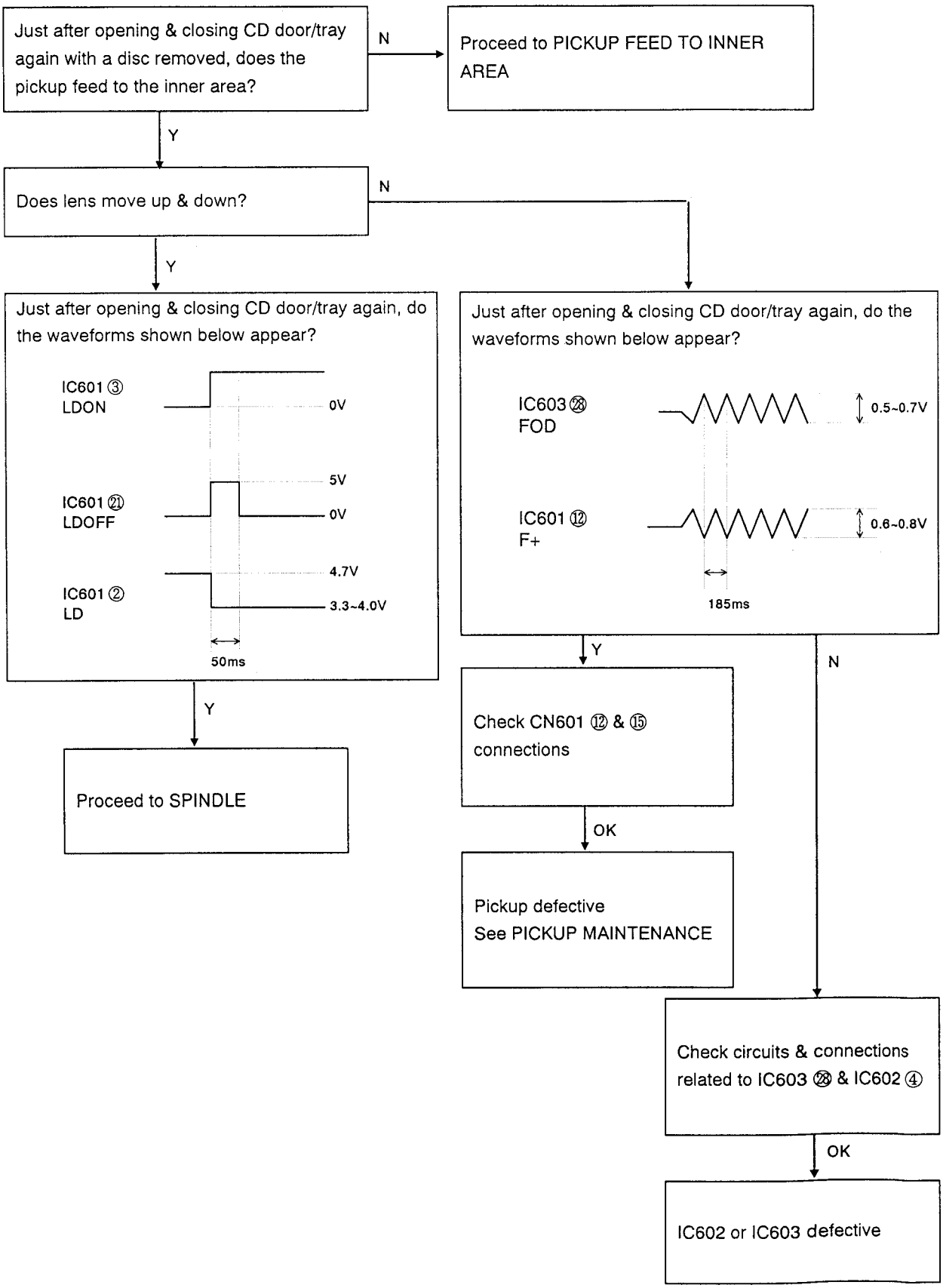

◆ Pickup feed to inner area

Check CN602, CN603, CN604 connections

OK

Just after opening & closing CD door/tray again, is 6 - 7 V supplied from Q631 Emitter Terminal?

N → Check CD regulator circuit on amp PC board

Y

Just after opening & closing CD door/tray again, is 5 V supplied from Q631 Corrector Terminal?

→ Check circuits & connections related to Q631 & IC602 ⑤, ⑥

OK → Q631 or IC602 defective

Y

Just after opening & closing CD door/tray again, do the waveforms shown below appear?

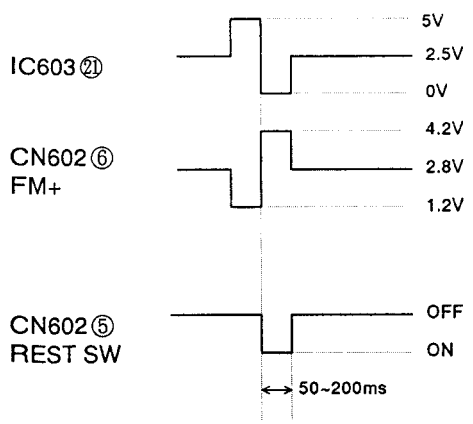

N → Check circuits & connections related to:
CN604
IC603 ㉑
IC602 ⑰, ⑱, ⑳
CN602 ①, ②, ⑤, ⑥

OK → Microcomputer or IC603 or IC602 defective

Y → Normal

◆ Spindle

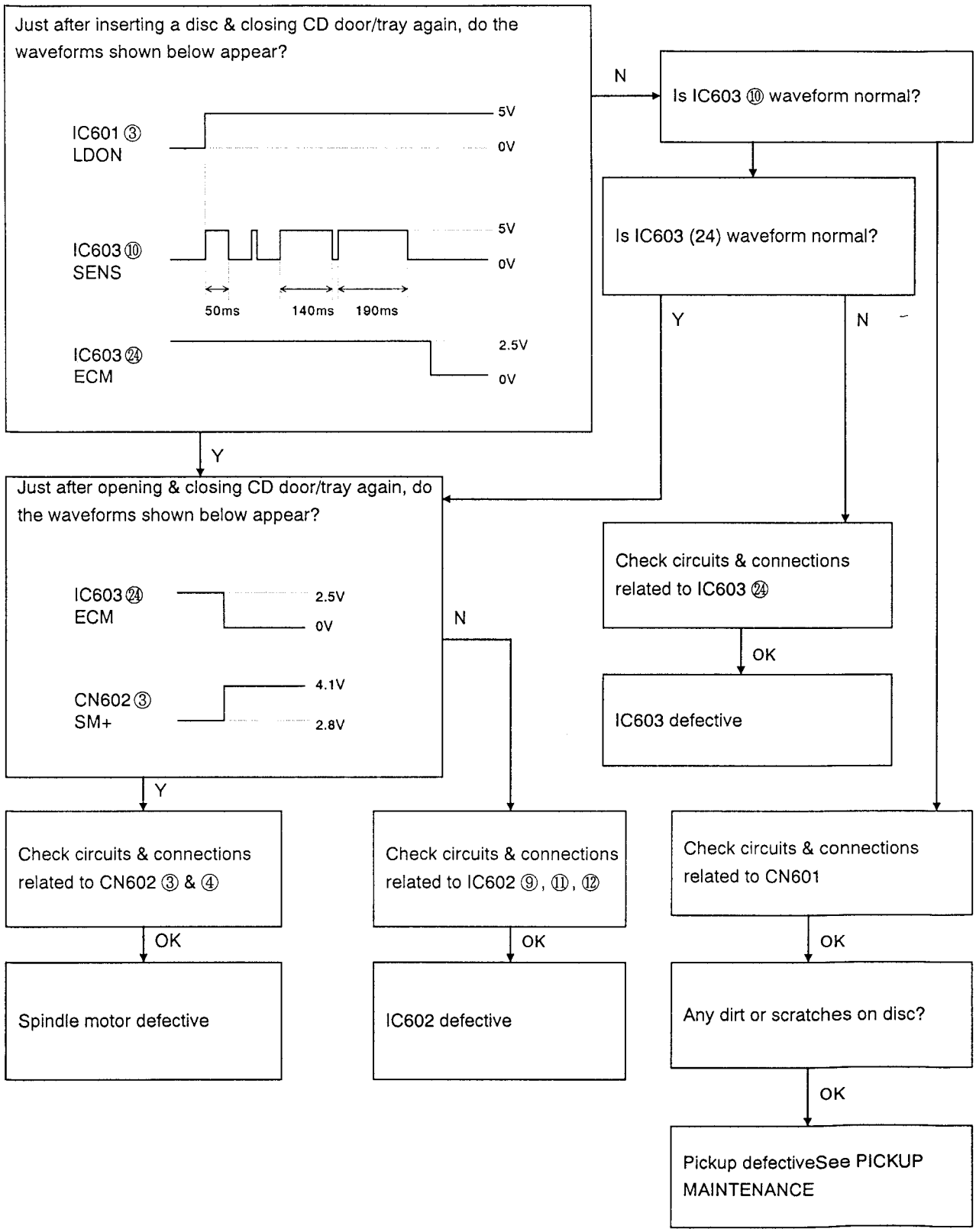

www.manualscenter.com

4 Jig list

■ Extention cable parts Number and using Location

◆ CD / tuner unit section

Extention cable kit number : EXTUXE1 – JIG

VWF1207 – 40TTBX

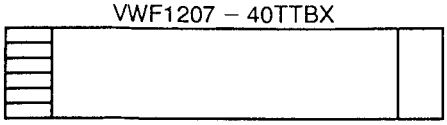

CDamp. board(CN603) ⇔ Microprocessor board(CN807)
7pin card wire

VWF1211 – 40TTBX

CDamp. board(CN604) ⇔ Microprocessor board(CN806)
11pin card wire

VDM9259 – 003

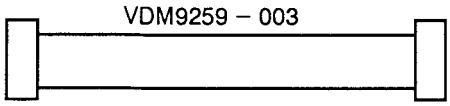

CDamp. board(CN605) ⇔ Connect wire from microprocessor board
3pin connect wire

VWF1219 – 40TTBX

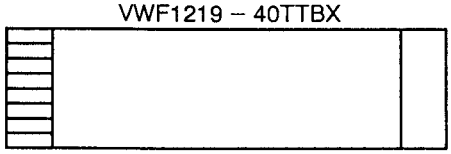

Microprocessor board(CN801) ⇔ Function board(CN701)
19pin card wire

VWF1207 – 40TTBX

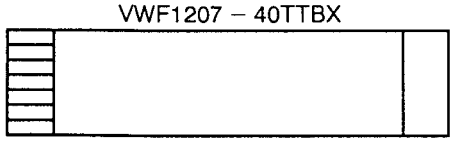

Microprocessor board(CN802) ⇔ Function board(CN702)
7pin card wire

VWF1216 – 40TTB

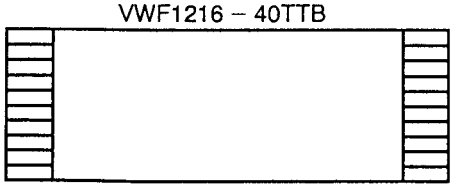

Microprocessor board(CN803) ⇔ LCD board(CN814)
16pin card wire

VWF1216 – 40TTB

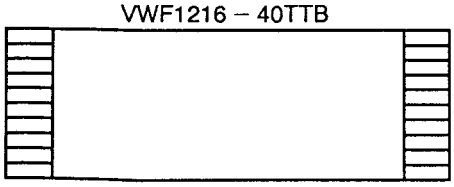

Microprocessor board(CN804) ⇔ LCD board(CN815)
16pin card wire

VWF1209 – 40TTB

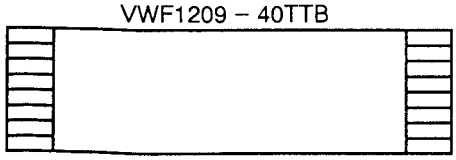

Microprocessor board(CN805) ⇔ CD / tuner switch board
9pin card wire

VWF1209 – 40TTBX

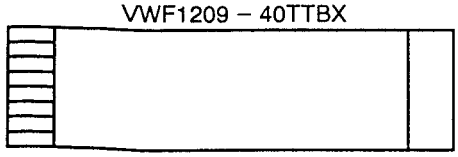

Microprocessor board(CN810) ⇔ Tuner board(CN1)
9pin card wire

VDM9259 – 008

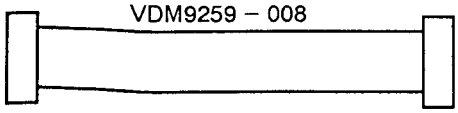

Microprocessor board(CD811) ⇔ CD door moter / switch wire
8pin connect wire

◆ Deck / amplifier unit section

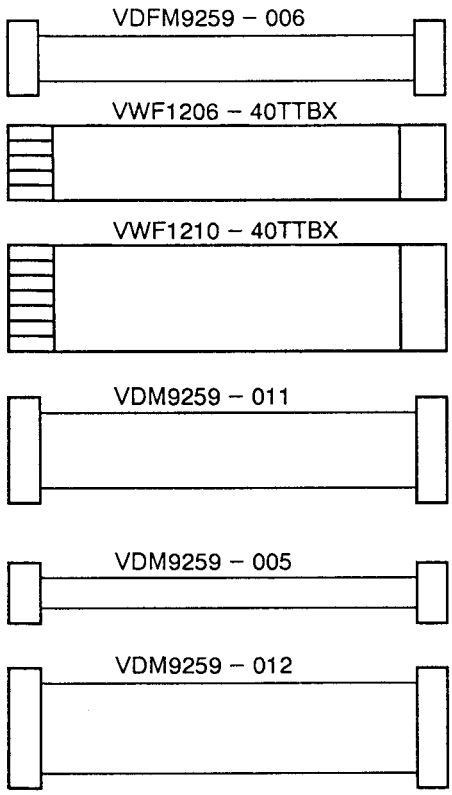

Cassette switch board ⇔ Mechanism contrpl board
6pin connect wire to Mechanism control board CN375

amp. / Dolby NR board (CN321) ⇔ Power amp. board(CN336)
6pin card wire

Mechanism board (CN372) ⇔ Power amp. board(CN336)
10pin card wire

amp. / Dolby NR board (CN324) ⇔ Mechanism control board(CN374)
11pin connect wire

amp. / Dolby NR board (CN323) ⇔ Rec bias board(CN353)
5pin connect wire

Mechanism belonging board ⇔ Mechanism control board(CN371)
12pin connect wire

◎ The main unit of this system is divided into two major components: (1) the cassette mechanism section on the front of the unit and (2) the amp section on the rear of the unit.

The unit can be split into those two sections by removing the two screws on both sides of the front panel and the three screws on the bottom.

After separating the unit, connect the cassette mechanism section and amp section using an extension cable.

5 Main Adjustments

■ Test instruments required for adjustment

1. Low frequency oscillator
   - •Oscillation frequency:50Hz to 20kHz
   - •Output:dBs with 600 Ω terminator
2. Attenuator(impedance:600 Ω)
3. Electronic voltmeter
4. Resistor····· 600 Ω for attenuator matching
5. Distortion meter
6. Torque gauge ····· Cassette type for CTG – N mechanism adjustment
7. Wow and Flutter meter
8. Frequency counter
9. Test Tapes

VTT704(12.5kHz) ·····Head azimuth
VTT712(3kHz) ····· Tape speed and wow & flutter
VTT722(400Hz) ····· Playback output level
TMT735(1kHz/12.5kHz) ···· Frequency response check
VTT739(63Hz/1kHz/10kHz) · Frequency response check
AC – 224(TS – 12) ·····Normal tape(Rec/PB)
AC – 513(TS – 9) ····· Chrome tape(Rec/PB)

■ Measuring conditions(Amplifier section)

Supply voltage: AC230V(50Hz)
Reference output:Speaker ·····0dBs(0.775V)/3 Ω
:Headphone ·· – 27dBs(0.035V)/32 Ω
:Line output ··· 300mV(=8.2dB)47k Ω
Reference input: Test point CN322:····· – 8dBs

● Standard position of function switches

Function switch ····· TAPE
NR switch ····· OFF
Timer switch ····· OFF
Active Hiper-Bass pro switch ····· OFF

● Standard position of volume control

Main volume adjust ····· Adjust 0dB(indicat VOL 30)
Measuring point····· CN322 or Headphone

CN322 Test point

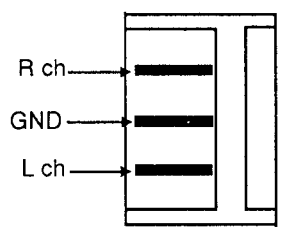

■ Measuring condition(Radio section)

(Radio alignment is not necessary for this model.)

AM frequency····· 400Hz modulation 30%
FM frequency·····400Hz modulation frequency deviation 22.5kHz

● Standard position of switches and controlls

Function ····· RADIO
Mode ····· STEREO

● Careful points for adjustment

1. Connect 30 pF capacitor and 33k Ω resistor to the output side of the IF sweeper in series while 0.082 μ F capacitor and 1000k Ω resistor to the input side in series.
2. Set output level of the IF sweeper as minimum as adjustable.

www.manualscenter.com

Cassette mechanism & Amplifier section

Items	Conditions	Adjustment and Confirmation	Standard Value	Adjusting
Adjusting the head angle	Test tape: VTT704 (12.5 kHz) Measured output terminal: Speaker terminals (L, R channels) (load impedance: 8 Ω)	(1) Play test tape VTT704 (12.5 kHz). (2) Turn to adjust the head azimuth adjustment screw so that the playback output level's deviation from the peak point comes to within 2 dBs and that the phase difference becomes the minimum. After adjusting, apply a screw-locking compound so that it covers over half of the screw head in order to prevent the head from moving. (3) If measured levels are not as those specified, fine-adjust them using the head azimuth adjustment screw.	Within 2 dB deviation from peak point Minimum phase difference 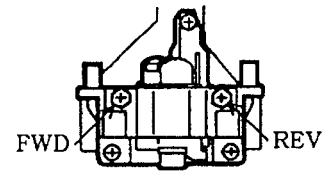	Readjust after head replacement
Tape speed adjustment Checking the wow and flutter	Test tape: VTT712 (3 kHz) Measured output pin/terminal: CN322 (TP) pin or speaker terminal (load impedance: 3 Ω)	(1) Adjust the VR301 so that the frequency counter reads 3010 ± 10 Hz when playing back the ending of test tape VTT712 (3 kHz). (2) Check that wow and flutter are less than 0.25% (JIS WTD).	Tape speed: Within 3010 ± 10 Hz Wow and flutter: Lower than 0.25% (JIS WTD)	VR301
Adjusting the playback output level	Test tape: VTT727 (400 Hz) Measured output pin: CN322 (TP) pin	Adjust the VR101 (L) and VR201 (R) so that the level at the CN322 pin comes to -8 dBs ± 1 dB when playing back test tape VTT727.	-8 dBs ± 1 dB	L: VR101 R: VR201
Checking the playback frequency response	Test tapes: VTT739 (63 Hz, 1 kHz, 10 kHz) TMT735 (1 kHz, 12.5 kHz) Measured output pin: CN322 (TP) pin	Check that the level deviations, when playing back the test tapes VTT739 (1 kHz, 63 Hz) and TMT735 (1 kHz, 12.5 kHz), are within 0 ± 4 dBs at 63 Hz and 0 ± 3 dBs at 12.5 kHz when compared to those at 1 kHz.	1 kHz/63 Hz: 0 ± 4 dBs 1kHz/12.5kHz: 0 ± 3 dBs	

Items	Conditions	Adjustment and Confirmation	Standard Value	Adjusting
Adjusting the bias oscillation frequency	Test tape: AC-513 Measured output pin: Oscillation coil secondary side (erase)	(1) Connect a frequency counter (with a 1 M Ω resistor inserted in series) to the L321 secondary side erase pin. (2) Load the test tape (AC-513) in the deck and set to Record-Pause mode. (3) Adjust the T3351 so that the frequency counter level reads 100 kHz ± 0.2 kHz in Record mode.	100 kHz ± 0.2 kHz	T3351
Adjusting the recording/playb frequency response	Reference frequencies: 1.25 kHz, 12.5 kHz (Reference level: -20 dBs) Measured input terminal: AUX IN Measured output pin: TP CN322 Test tape: AC-224	(1) Alternately repeat recording reference frequencies of 1.25 kHz and 12.5 kHz via the AUX IN terminal on a normal tape. (2) Adjust the VR103 and VR203 so that the output deviation between 1.25 kHz and 12.5 kHz at the CN322 pin comes to -0.5 ± 1 dB when playing back recorded sections.	Normal tape: -0.5 ± 1 dB	L: VR103 R: VR203
Adjusting the recording/playb sensitivity	Test tape: AC-224 Input terminal: AUX IN Output pin: CN322 Reference frequency: 400 Hz (Reference level: -20 dBs)	(1) Record and play back a reference frequency of 400 Hz with a reference level of -20 dBs via the AUX IN terminal on test tape AC-224, and adjust the VR102 and VR202 so that the level at this time comes to 0 ± 1 dB when compared to the monitor level.	0 ± 1 dB	L: VR102 R: VR202
Checking Dolby NR effect	Test tape: VTT704 (12.5 kHz) Measured output pin: CN344 (TP)	When playing back the VTT704 (12.5 kHz) and turning the Dolby NR switch from OFF to ON, check that the level lowers by approx. 4 dBs.	Lowers by 4 dBs	

Items	Conditions	Adjustment and Confirmation	Standard Value	Adjusting
Checking the line output level	Test tape: VTT727	Play back the VTT727 (400 Hz) and check that the line output level reads within -5 dBs ± 3 dBs.	-5 dBs ± 3 dBs	
Checking the recording/ playback distortion rate	Test tape: AC-224 Measured output pin: CN322 (TP) Measured input terminal: AUX IN	Apply a 1 kHz signal with a reference level to the AUX IN terminal and check that the level of the distortion meter, during recording and playback, is within 5%.	Within 5%	
Checking the recording/ playback S/N ratio	Test tape: AC-224 Measured output pin: CN322 (TP) Measured input terminal: AUX IN	1. Apply a 1 kHz signal with a reference level to the AUX IN terminal and stop applying the input signal during recording to execute a no-signal recording. 2. Check that the playback level difference between recorded section and no-signal section is 45 dBs or more.	45 dBs or more	

■ Adjusting points

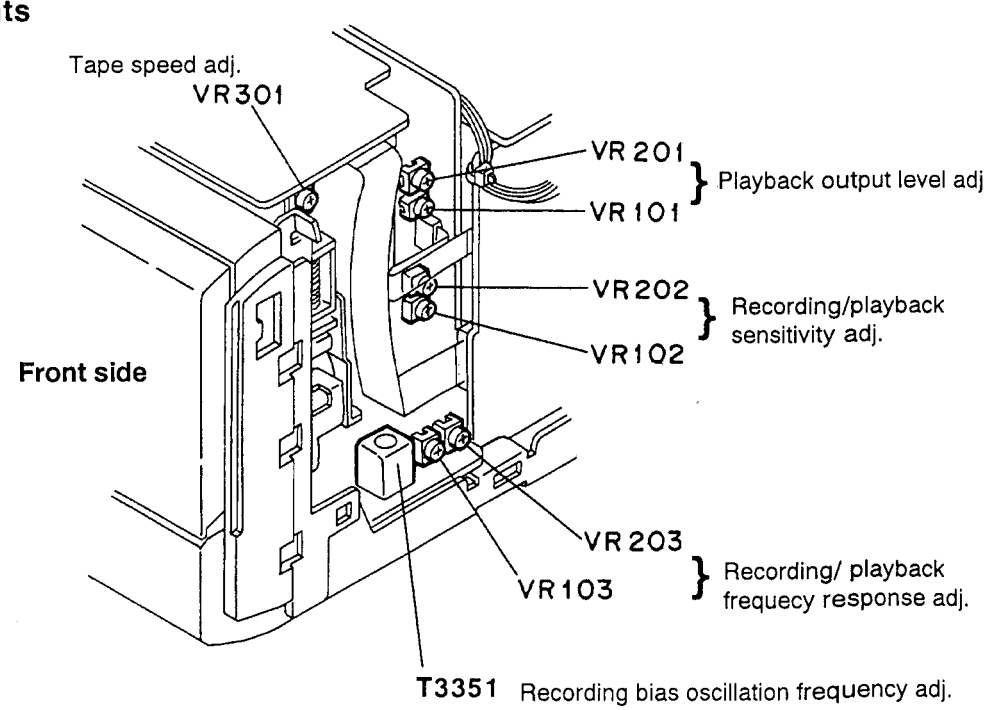

www.manualscenter.com

■ CD section

Items	Conditions	Adjustment and Confirmation	Standard Value	Adjusting
1. Checking jitter	Measurement equipment: Oscilloscope (jitter meter) Test points: TP601: ground side TP602: hot side	Connect the jitter meter between the TP601 and TP602, and check that the jitter meter reads 26 nsec. or less when playing back the test disc "Track 1".	26 nsec. or less	
2. Checking the RF level (eye pattern)	Measurement equipment: Oscilloscope TP601: ground side TP602: hot side	Connect the oscilloscope between the TP1 and TP2, and check that the peak-to-peak value of the oscilloscope waveform reads within 1.1 V ± 0.2 V when playing back the test disc "Track 1". Eye pattern waveform	1.1 V ± 0.2 V Check that the maximum level of this waveform is within the standard values and that the waveform is clearly visible.	
3. Checking the outermost area	CTC-1000	Select "Track 28" on the outer area of test disc directly and check that it begins playback smoothly and that there are no abnormal conditions such as a tracking error.		
4. Checking the pickup movement from the outer area to the inner area		Allow the pickup to skip over from the disc's outermost area to "Track 1" and check that it takes within 10 seconds for the player to enter Play mode.	Within 10 seconds	

■ CD test point diagram

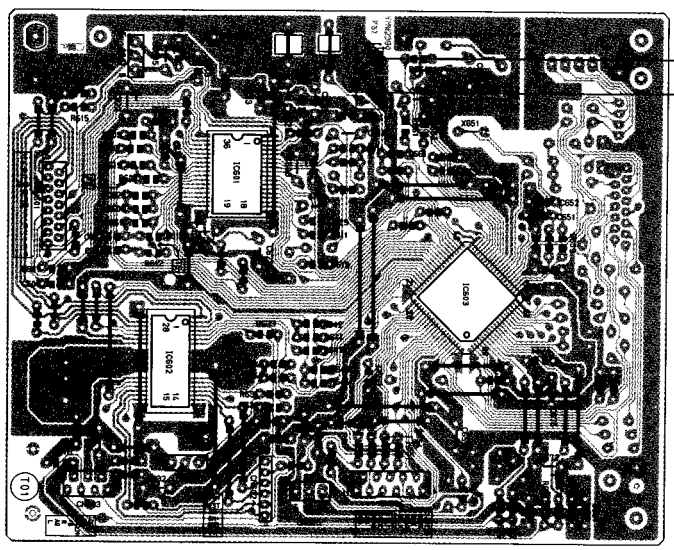

6 Wiring connection

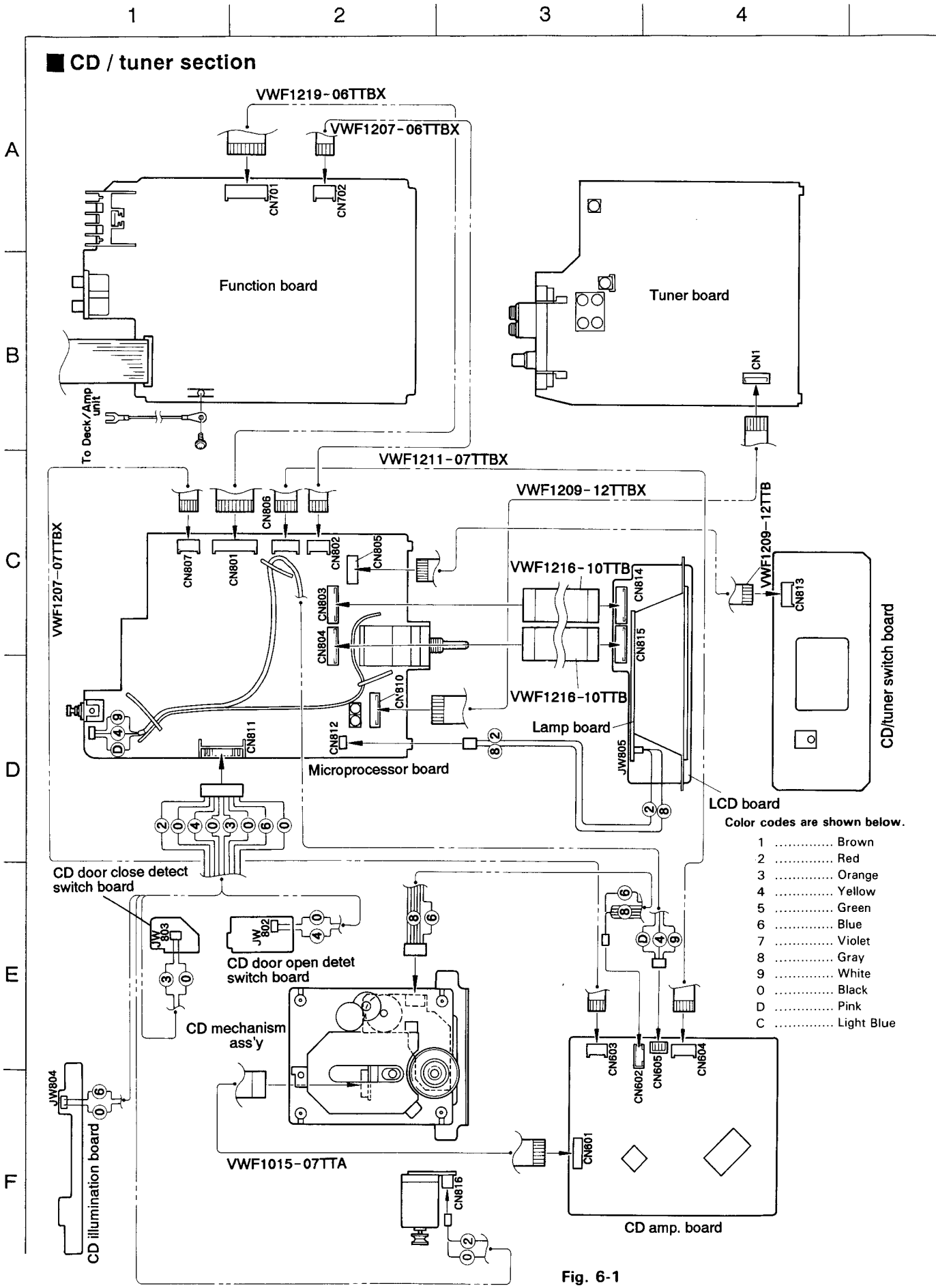

Fig. 6-1

■ Deck and amplifire /power supply section

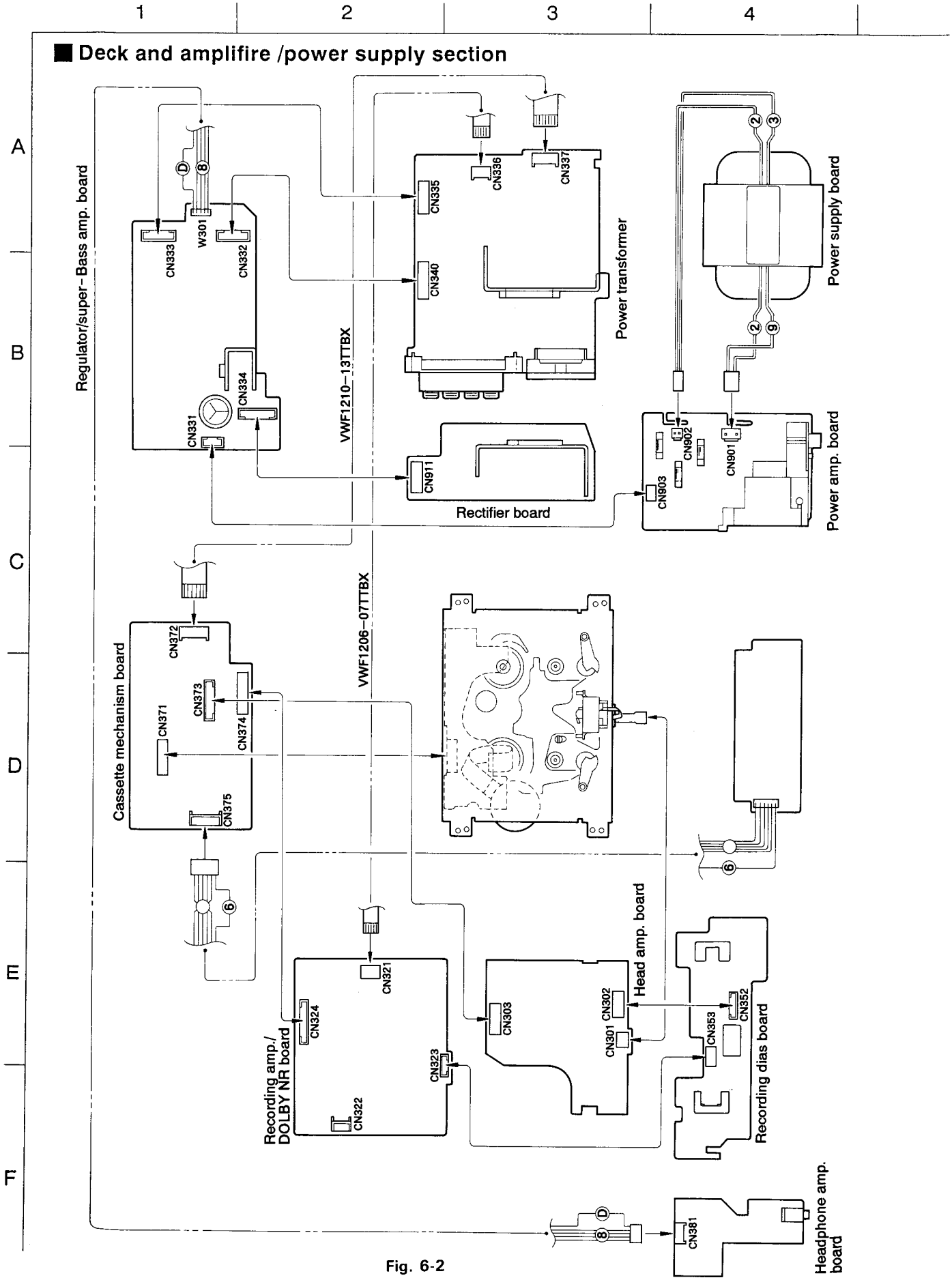

Fig. 6-2

www.manualscenter.com

7 Block diagram

Integrated circuit diagram

IC2 (LC72136) PLL

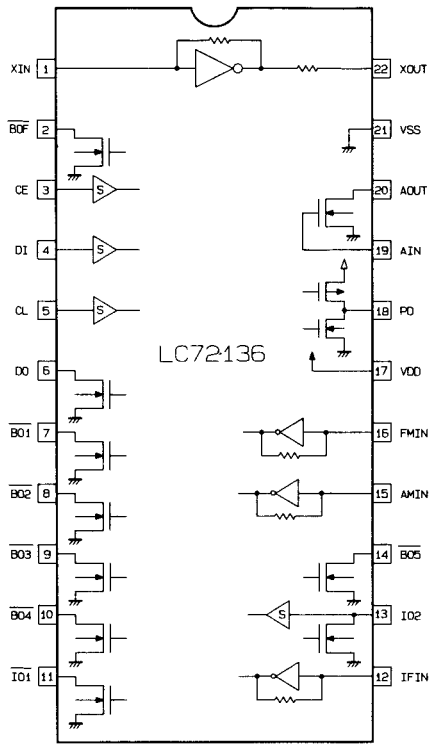

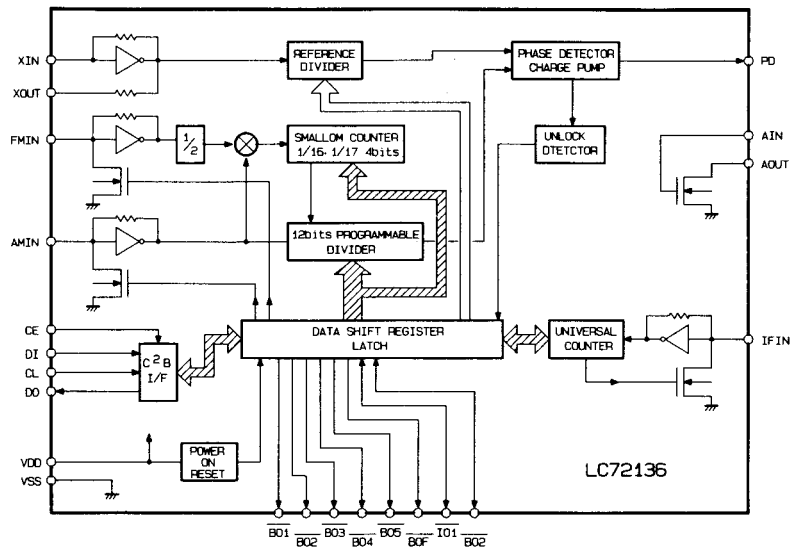

Fig. 7-1

IC1 (TA2057N) IF & MPX

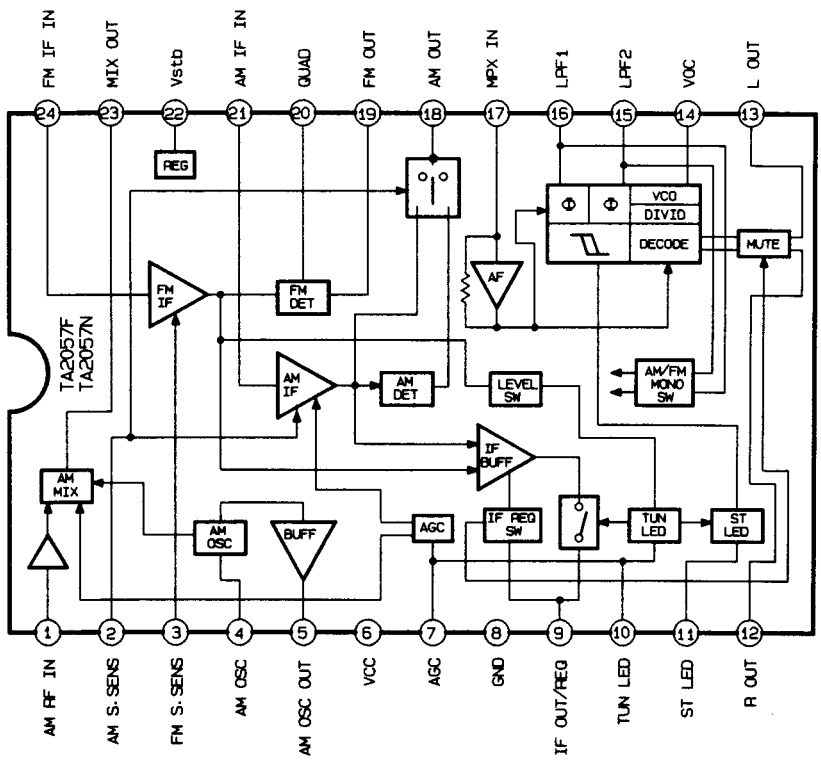

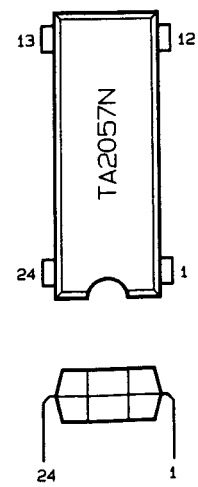

Fig. 7-2

■IC802 (TA8409S)

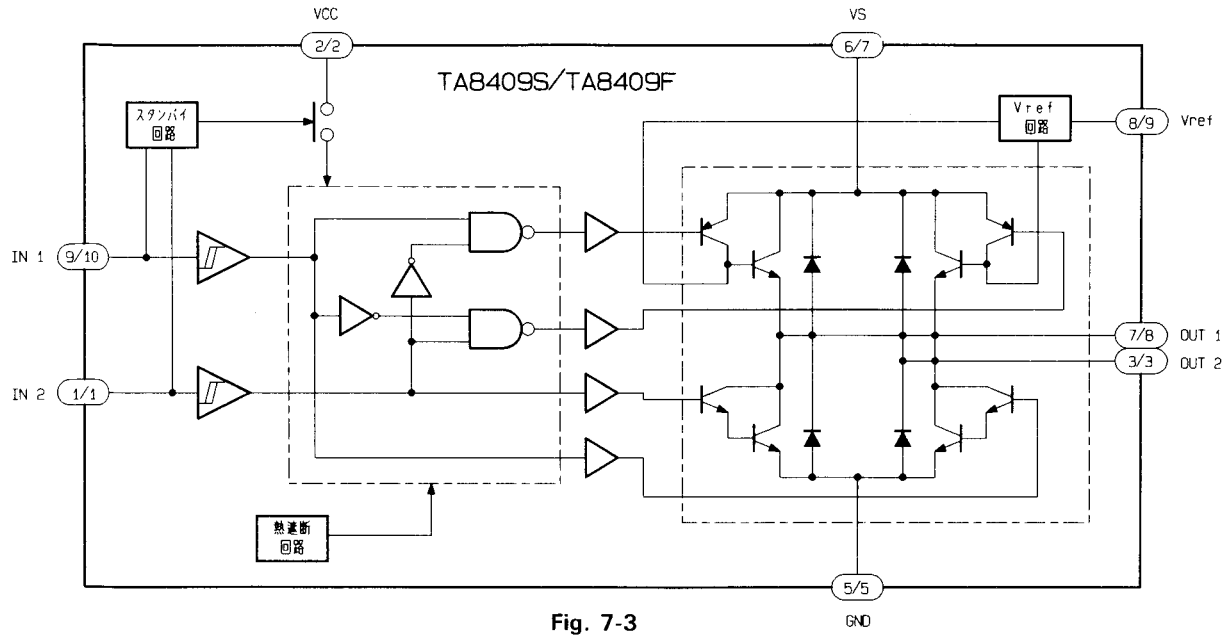

Fig. 7-3

■IC803 (BA6208A)

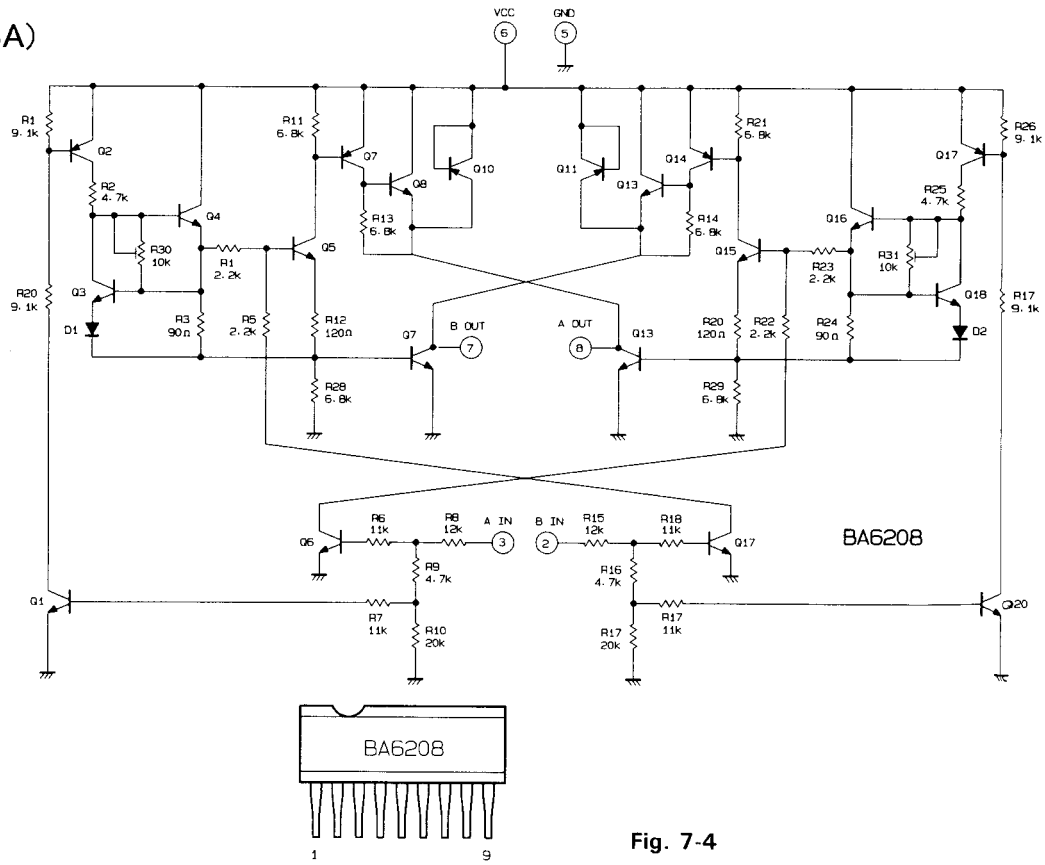

Fig. 7-4

■IC4 (TA7358S)

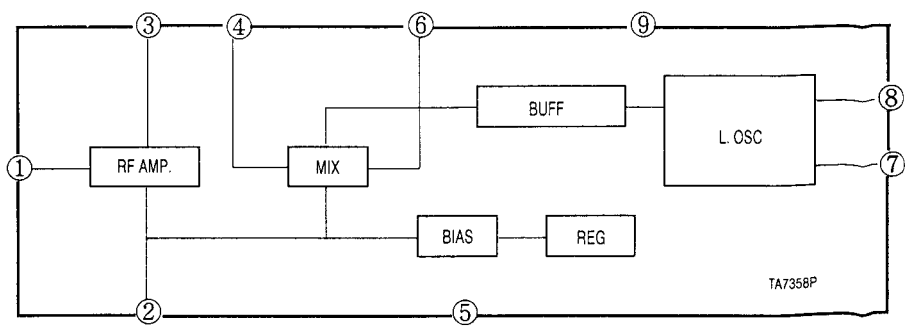

Fig. 7-5

www.manualscenter.com

■ IC336 (LA4525) Headphone amp.

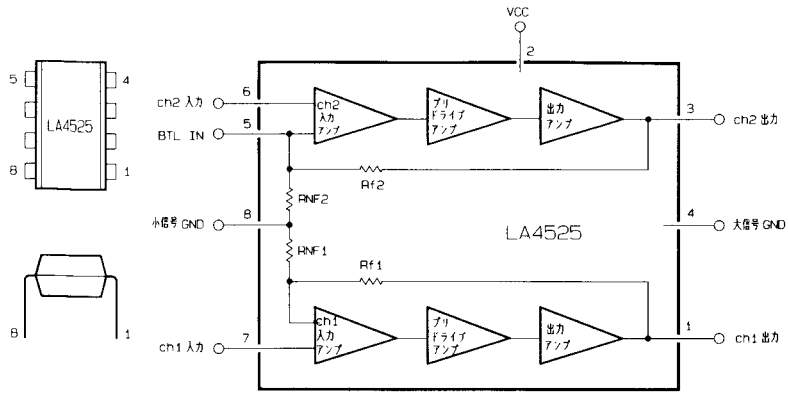

Fig. 7-6

■ IC302 (UPC1330HA) Rec／PB switch

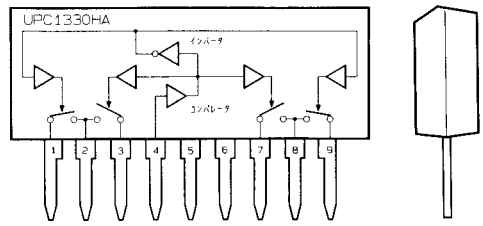

Fig. 7-7

■ IC335 (TA8220H) Power amp.

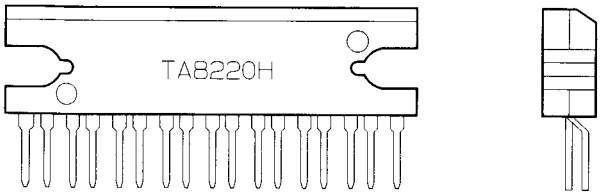

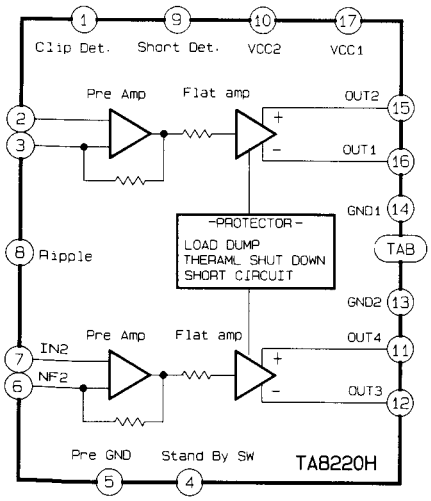

Fig. 7-8

■ IC322 (LA3220)

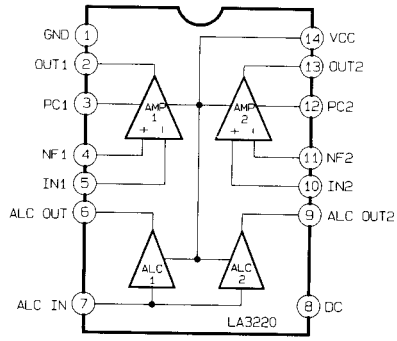

Fig. 7-9

■ IC334 (BH3854AFS)

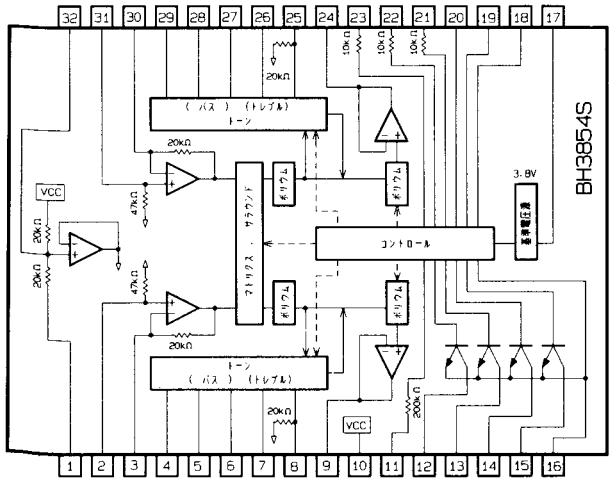

Fig. 7-10

■ IC301 (UPC1228HA)

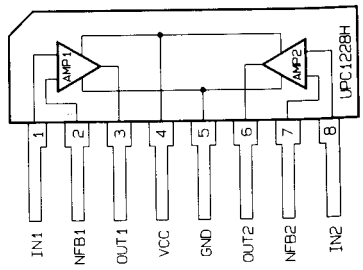

Fig. 7-11

■IC321 (HA12134A)

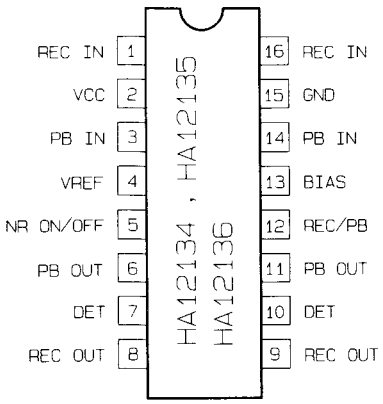

Fig. 7-12

■IC804 (BA10358N)

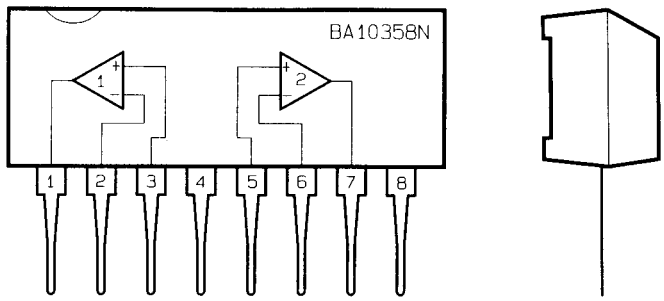

1. OUT1
2. -IN1
3. +IN1
4. GND
5. +IN2
6. -IN2
7. OUT2
8. VCC

Fig. 7-13

■IC702~IC704 (BA3121)

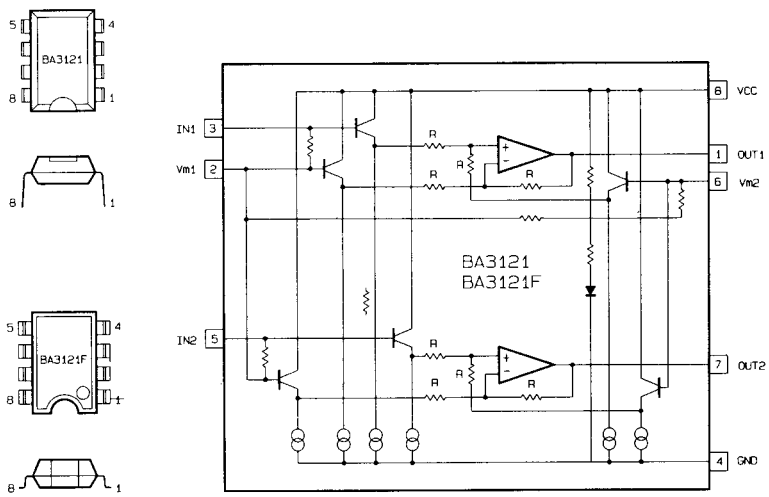

Fig. 7-14

■IC701 (BA15218F) Function amp.

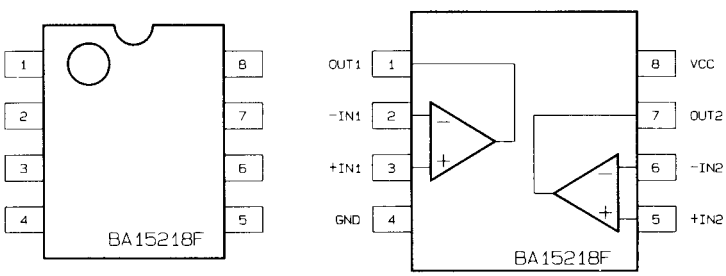

Fig. 7-15

www.manualscenter.com

■ MN171603 System microprocessor

No.	Signal name	I/O	Explanation for this signal	ACT
1	HALL	I	Tape playback / Tape end detect	
2	PLAY/MS	I	Cassette mechanism play switch detect / Music scan detect	
3	AVSS		AD converter reference GND voltage	
4	KEY 1	I	Key Input 1	
5	KEY 2	I	Key Input 2	
6	DOOR/RST	I	Door open / close / rest switch detect	
7	TAPE	I	Tape leaf switch detect	
8	VOLUME	I	Volume voltage detect	
9	SAFETY	I	Voltege moniter terminal	
10	METL	I	Level meter voltage detect L	
11	METR	I	Level meter voltage detect R	
12	AVDD		AD converter reference voltage Input	
13	VLC 1		LCD voltage drive terminal	
14	VLC 2			
15	VLC 3			
16	COM 3	O	LCD drive common out	
17	COM 2	O		
18	COM 1	O		
19	COM 0	O		
20	SEG 0	O	LCD drive segment out	
21	SEG 1	O		
22	SEG 2	O		
23	SEG 3	O		
24	SEG 4	O		
25	SEG 5	O		
26	SEG 6	O		
27	SEG 7	O		
28	SEG 8	O		
29	SEG 9	O		
30	SEG 10	O		
31	SEG 11	O		
32	SEG 12	O		
33	SEG 13	O		
34	SEG 14	O		
35	SEG 15	O		
36	SEG 16	O		
37	SEG 17	O		
38	SEG 18	O		
39	SEG 19	O		
40	SEG 20	O		
41	SEG 21	O		
42	SEG 22	O		
43	SEG 23	O		
44	SEG 24	O		
45	SEG 25	O		
46	SEG 26	O		
47	SEG 27	O		
48	VOL +	O	Electric volume drive (Volume up)	H
49	VOL –	O	Electric volume drive (Volume down)	H
50	VOLLD	O	Electric volume indicater drive (LED)	H
51	L.O.MUTE	O	Line output muting	L
52	S.BASS	O	Super – Bass pro control	H
53	F.TU	O	Function tuner mode	H
54	F.AUX	O	Function AUX mode	H
55	F.CD	O	Function CD mode	H
56	PERIOD	O	Tuner PLL strobe output	L
57	MT 0	O	CD door moter drive (close)	H
58	MT 1	O	CD door moter drive (open)	H
59	MTS	O	CD door moter speed control (slow speed)	L
60	MLD	O	CD comand load	L
61	MDATA	O	CD comand data	–
62	MCLK	O	CD comand clock	↑
63	XRST	O	CD LSI reset	L
64	BEAT	O	Beat – cut control	–
65	XKILL	O	Sub – clock stop	H
66	STSO	O	Sound IC strobe	H
67	POUT	O	Power supply control	H
68	RST	I	System reset Input	L
69	X1		Sub – clock Input 32.768 kHz	
70	X2		Sub – clock output 32.768 kHz	
71	VSS		GND	
72	OSC 1		Main – clock Input 4.194304 MHz	
73	OSC 2		Main – clock output 4.194304 MHz	
74	VDD		Power supply	
75	STAT	I	CD	
76	SQCK	O	CD Q cord read – out clock	↑
77	SUBQ	I	CD Q cord read – in clock	
78	BUP	I	Back – up detect	H
79	STTA	O	Tape strobe	L
80	CK	O	Serial clock	
81	SI	I	Serial data Input	
82	SO	O	Serial data output	
83	MPX	I	Multiplexer detect	L
84	REM	I	Rimocon Input	↓

Circuit diagram

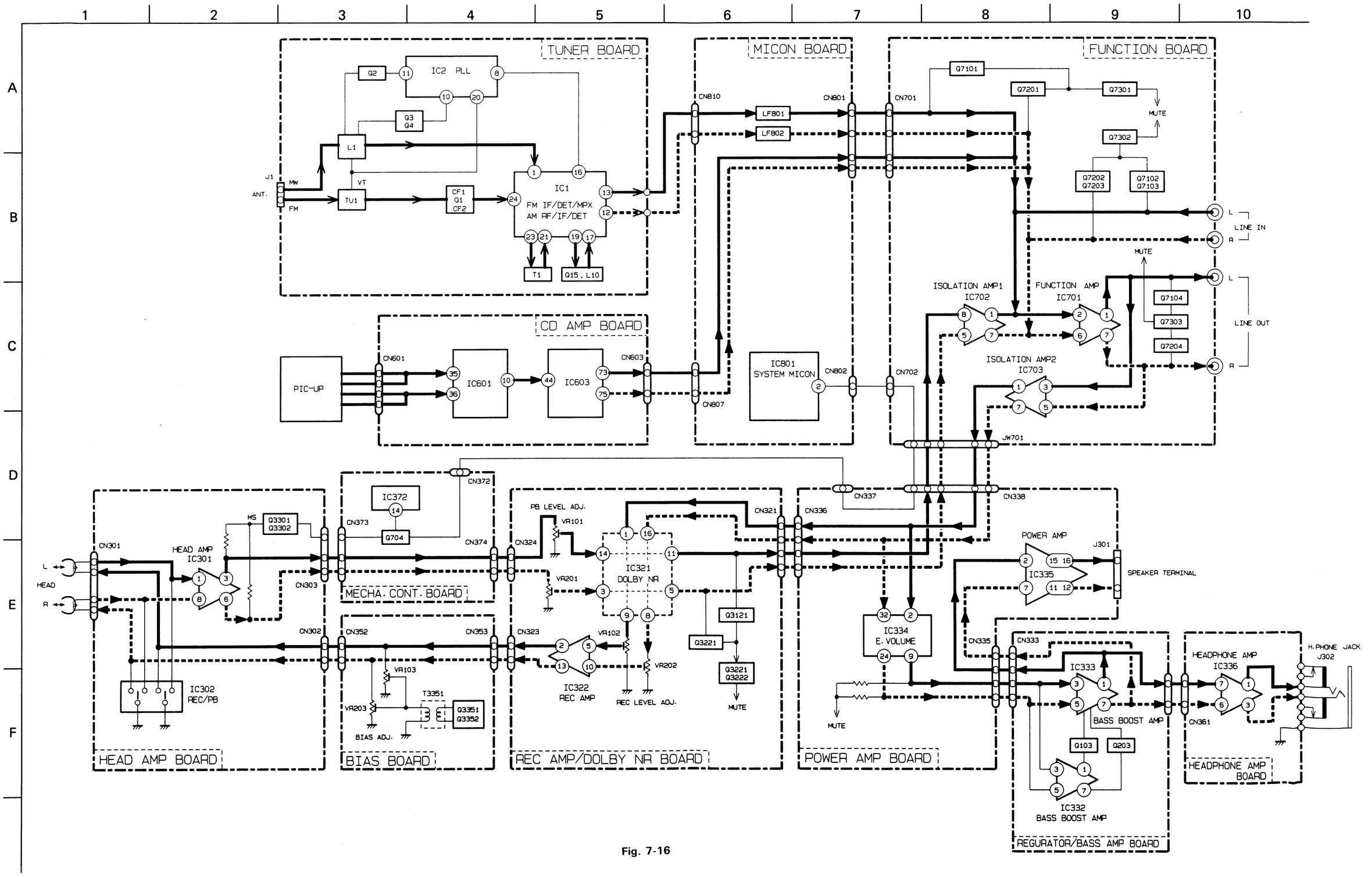

Fig. 7-16

www.manualscenter.com

8 Standard crcuit diagram

■ Tuner circuit

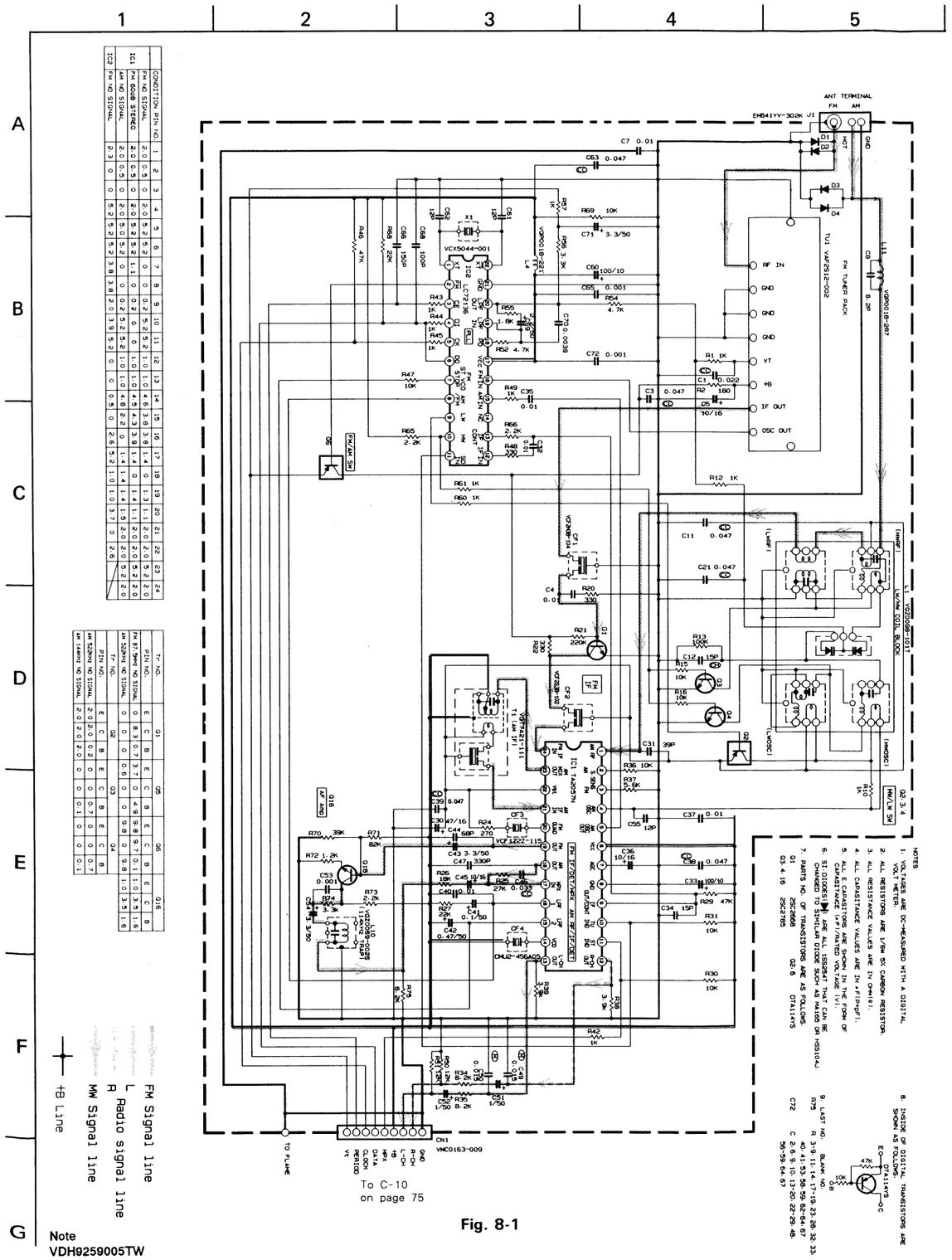

Note
VDH9259005TW

Fig. 8-1

■ CD amplifier/mechanism drive circuit

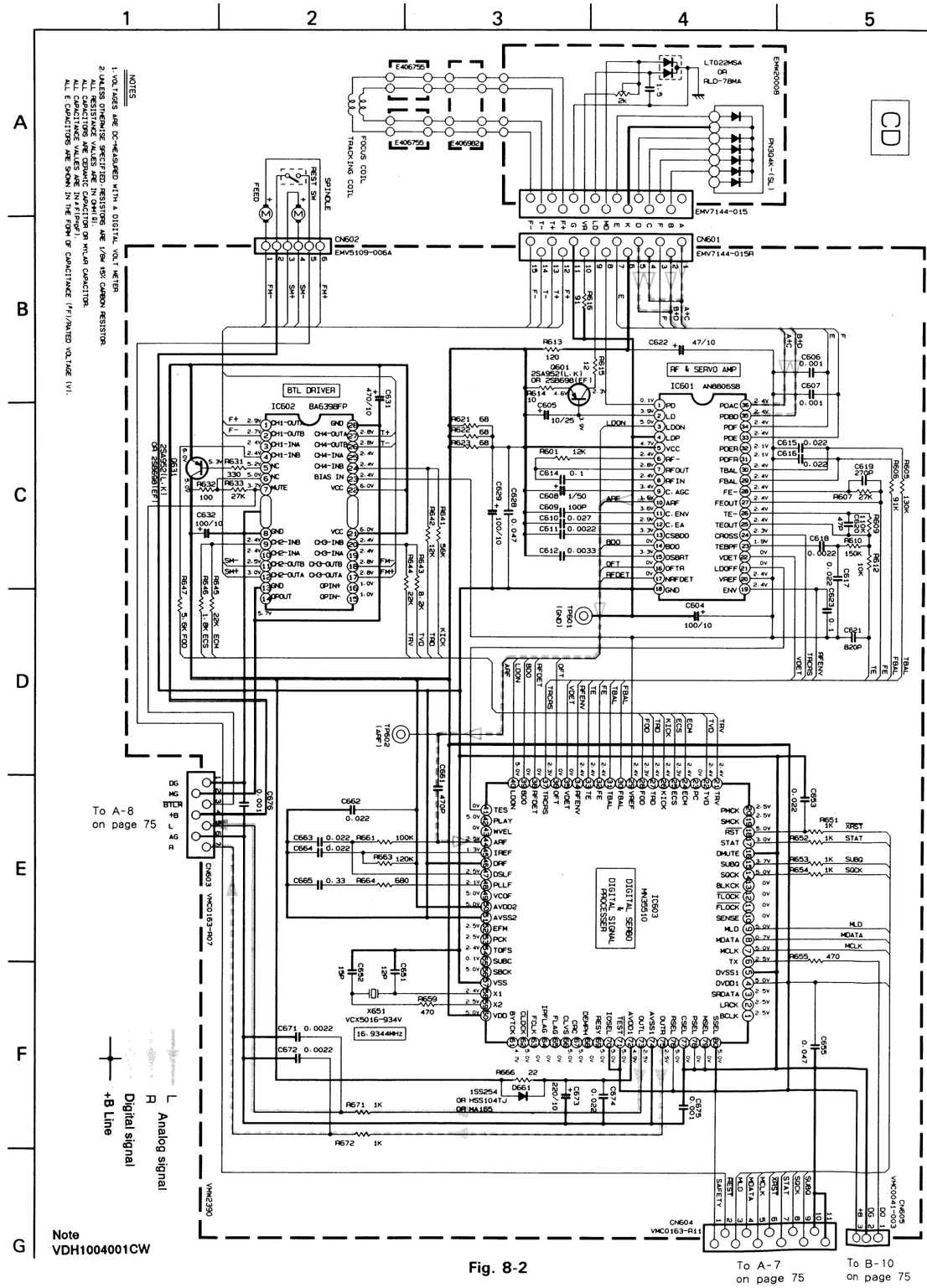

Note
VDH1004001CW

Fig. 8-2

www.manualscenter.com

■ Cassette amplifier circuit

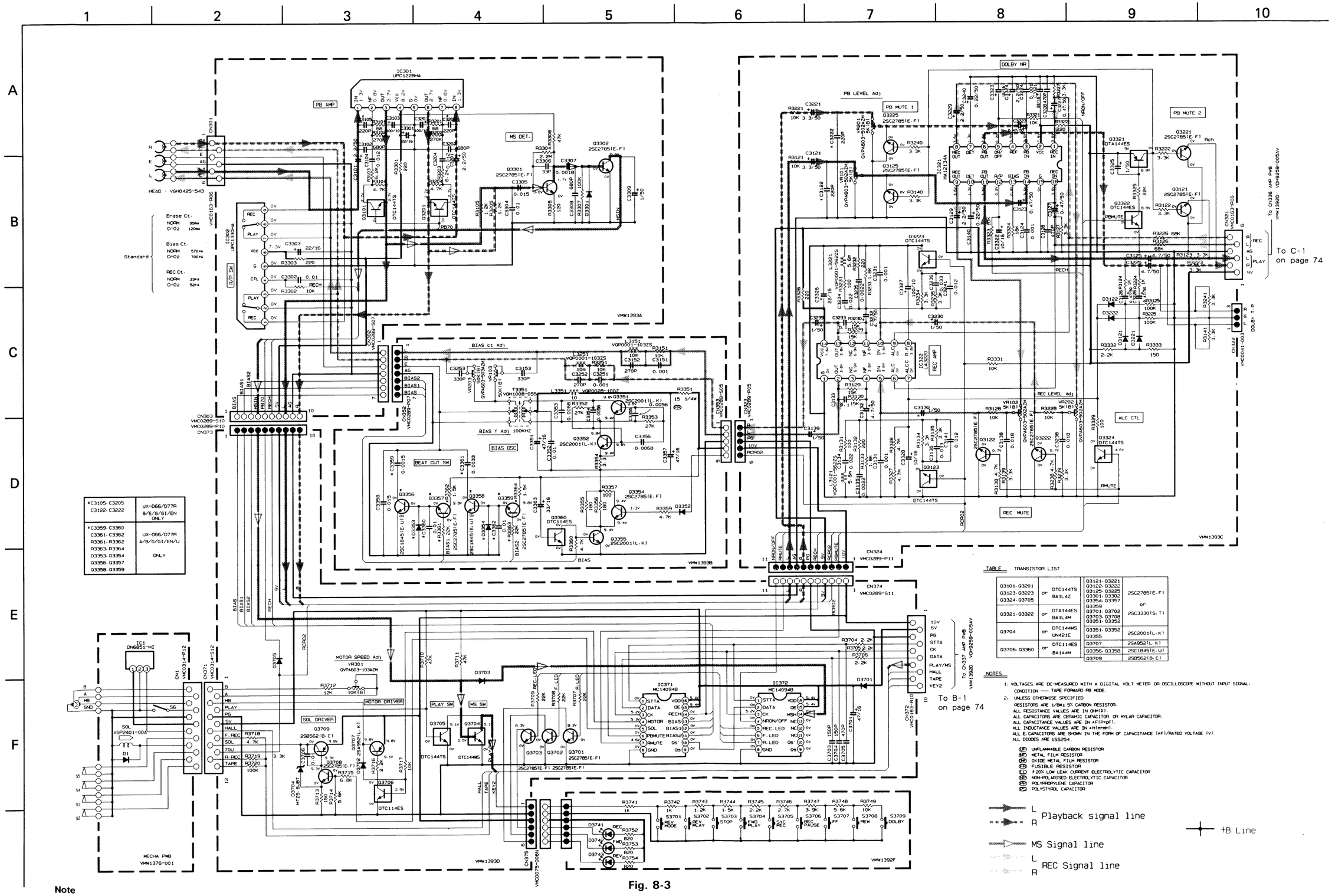

*C3105- C3205 C3122- C3222	UX-D66/D77R B/E/G/GI/EN ONLY
*C3359- C3360 C3361- C3362 R3361- R3362 R3363- R3364 Q3353- Q3354 Q3356- Q3357 Q3358- Q3359	UX-D66/D77R A/B/G/GI/EN/U ONLY

TABLE TRANSISTOR LIST

Q3101- Q3201 Q3123- Q3223 Q3324- Q3705	or	DTC144TS BA1L4Z	Q3121- Q3221 Q3122- Q3222 Q3125- Q3225 Q3301- Q3302 Q3354- Q3357	2SC2785(E-F) or
Q3321- Q3322	or	DTA144ES BA1L4M	Q3359 Q3701- Q3702 Q3703- Q3708 Q3351- Q3352	2SC3330(S-T)
Q3704	or	DTC144WS UN421E	Q3351- Q3352 Q3355	2SC2001(L-K)
Q3706- Q3360	or	DTC114ES BA1A4M	Q3707	2SA9521(L-K)
			Q3356- Q3358	2SC1845(E-U)
			Q3709	2SB562(B-C)

NOTES

1. VOLTAGES ARE DC-MEASURED WITH A DIGITAL VOLT METER OR OSCILLOSCOPE WITHOUT INPUT SIGNAL.
   CONDITION —— TAPE FORWARD PB MODE.
2. UNLESS OTHERWISE SPECIFIED
   RESISTORS ARE 1/6W± 5% CARBON RESISTOR.
   ALL RESISTANCE VALUES ARE IN Ω(MΩ).
   ALL CAPACITORS ARE CERAMIC CAPACITOR OR MYLAR CAPACITOR.
   ALL CAPACITANCE VALUES ARE IN μF(P=pF).
   ALL INDUCTANCE VALUES ARE IN μH(m=mH).
   ALL E CAPACITORS ARE SHOWN IN THE FORM OF CAPACITANCE (μF)/RATED VOLTAGE (V).
   ALL DIODES ARE 1SS254.

(F) UNFLAMMABLE CARBON RESISTOR
(MF) METAL FILM RESISTOR
(OM) OXIDE METAL FILM RESISTOR
(FU) FUSIBLE RESISTOR
(L) ±20% LOW LEAK CURRENT ELECTROLYTIC CAPACITOR
(NP) NON-POLARISED ELECTROLYTIC CAPACITOR
(PP) POLYPROPYLENE CAPACITOR
(PS) POLYSTYROL CAPACITOR

L / R Playback signal line
+B Line
MS Signal line
L / R REC Signal line

Fig. 8-3

Note
VDH9259005PV

■ Power amplifier circuit

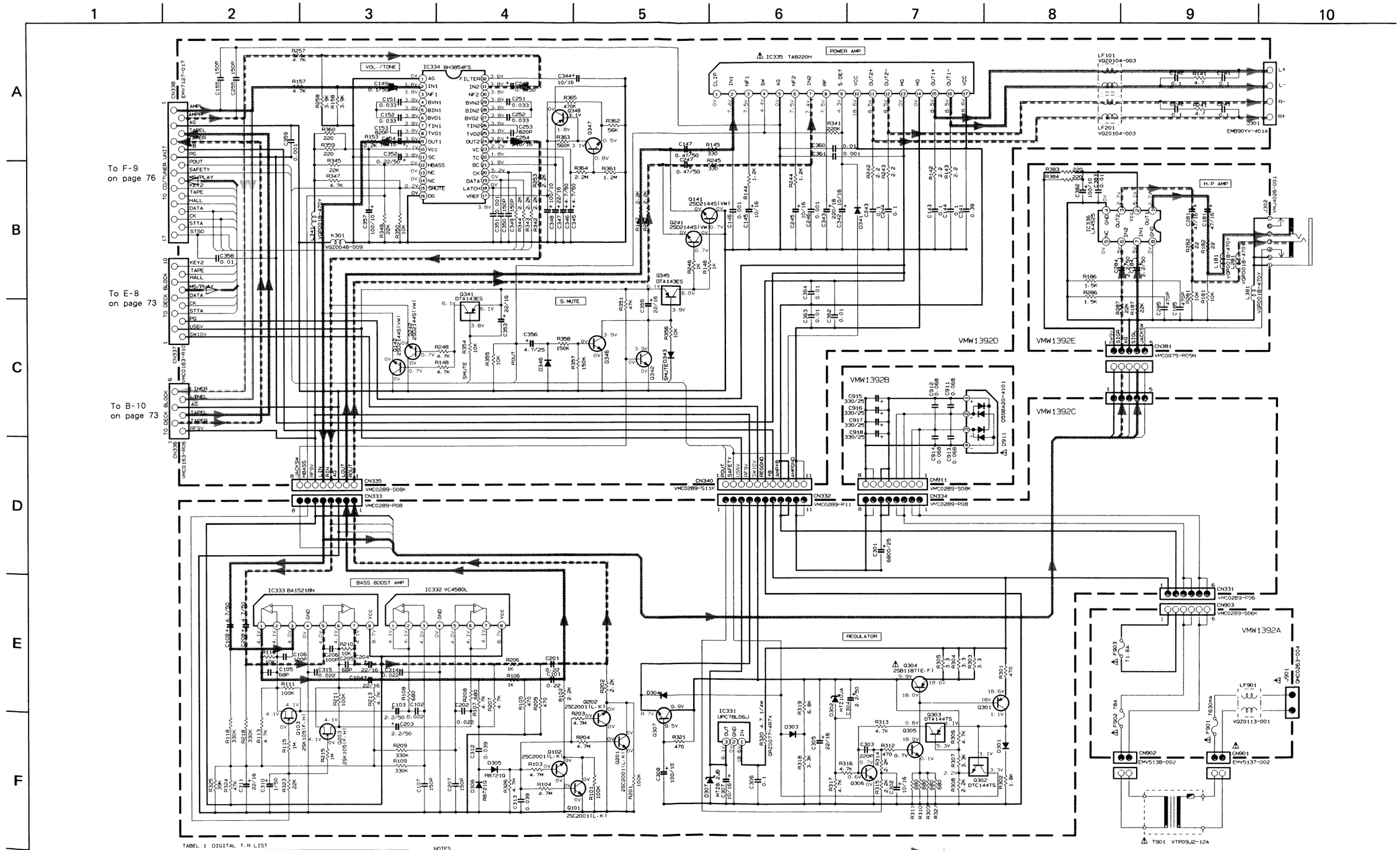

TABEL 1 DIGITAL T.R LIST

Q302		DTC144TS BA1L4Z	Q341 Q345		DTA143ES BN1L3M
Q303		DTA144TS BN1L4Z			

NOTES

1. VOLTAGES ARE DC-MEASURED WITH A DIGITAL VOLT METER OR OSCILLOSCOPE WITHOUT INPUT SIGNAL.
   CONDITION —— CD MODE

2. UNLESS OTHERWISE SPECIFIED·RESISTORS ARE 1/6W ±5% CARBON RESISTOR.
   ALL RESISTANCE VALUES ARE IN OHM(Ω).
   ALL CAPACITORS ARE CERAMIC CAPACITOR OR MYLAR CAPACITOR.
   ALL CAPACITANCE VALUES ARE IN μF(P=pF).
   ALL INDUCTANCE VALUES ARE IN μH(m=mH).
   ALL E.CAPACITORS ARE SHOWN IN THE FORM OF CAPACITANCE (μF)/RATED VOLTAGE (V).
   ALL DIODES ARE 1SS254 OR HSS104.
   ALL NPN TRANSISTORS ARE 2SC3330(S.T) OR 2SC2785(E.F).
   ALL PNP TRANSISTORS ARE 2SA1317(S.T) OR 2SA1175(HFE)

Note
VDH9259005AV

Fig. 8-4

www.manualscenter.com

System control circuit

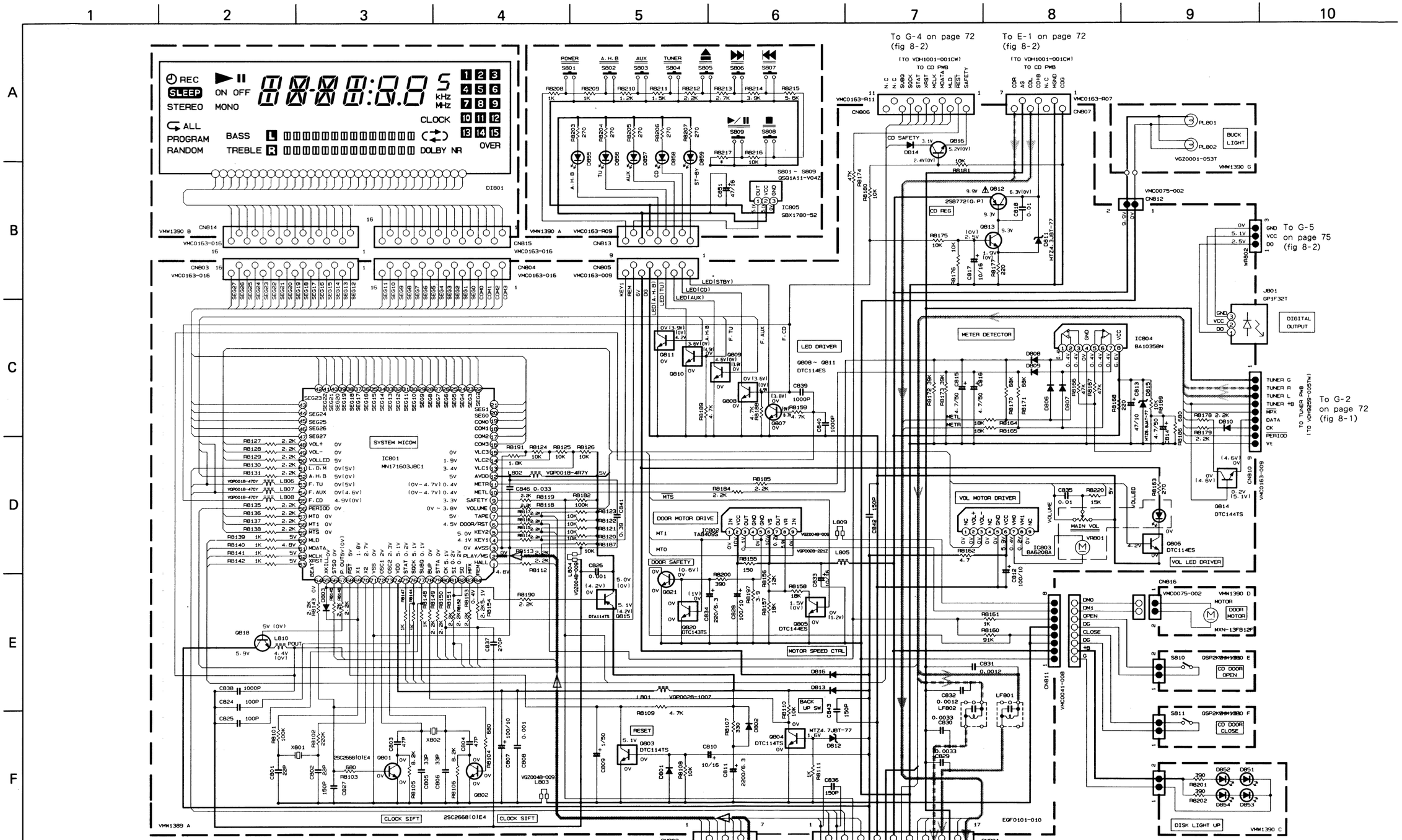

NOTES

1. VOLTAGES ARE DC-MEASURED WITH A DIGITAL VOLT METER OR OSCILLOSCOPE WITHOUT INPUT SIGNAL. CONDITION IS CD STOP MODE AND ( ) IS INVERT MODE.

2. UNLESS OTHERWISE SPECIFIEDRESISTORS ARE 1/6W ± 5% CARBON RESISTOR.
ALL RESISTANCE VALUES ARE IN OHM(Ω), OR MYLAR CAPACITOR.
ALL CAPACITORS ARE CERAMIC CAPACITOR
ALL CAPACITANCE VALUES ARE IN ×F(P=pF). OF CAPACITANCE (×F)/RATED VOLTAGE (V).
ALL INDUCTANCE VALUES ARE IN ×H(m=mH).
ALL E.CAPACITORS ARE SHOWN IN THE FORM
ALL DIODES ARE 1SS254T
ALL NPN TRANSISTORS ARE 2SC2785(E.F).

	E/B/G GI/EN	A/U
R8217	NO USE	18K

DTC114ES 10K | DTC144ES 47k | DTC143TS 4.7k | DTC114TS 10k

Fig. 8-5

Note
VDH9259005SV

www.manualscenter.com

Function circuit

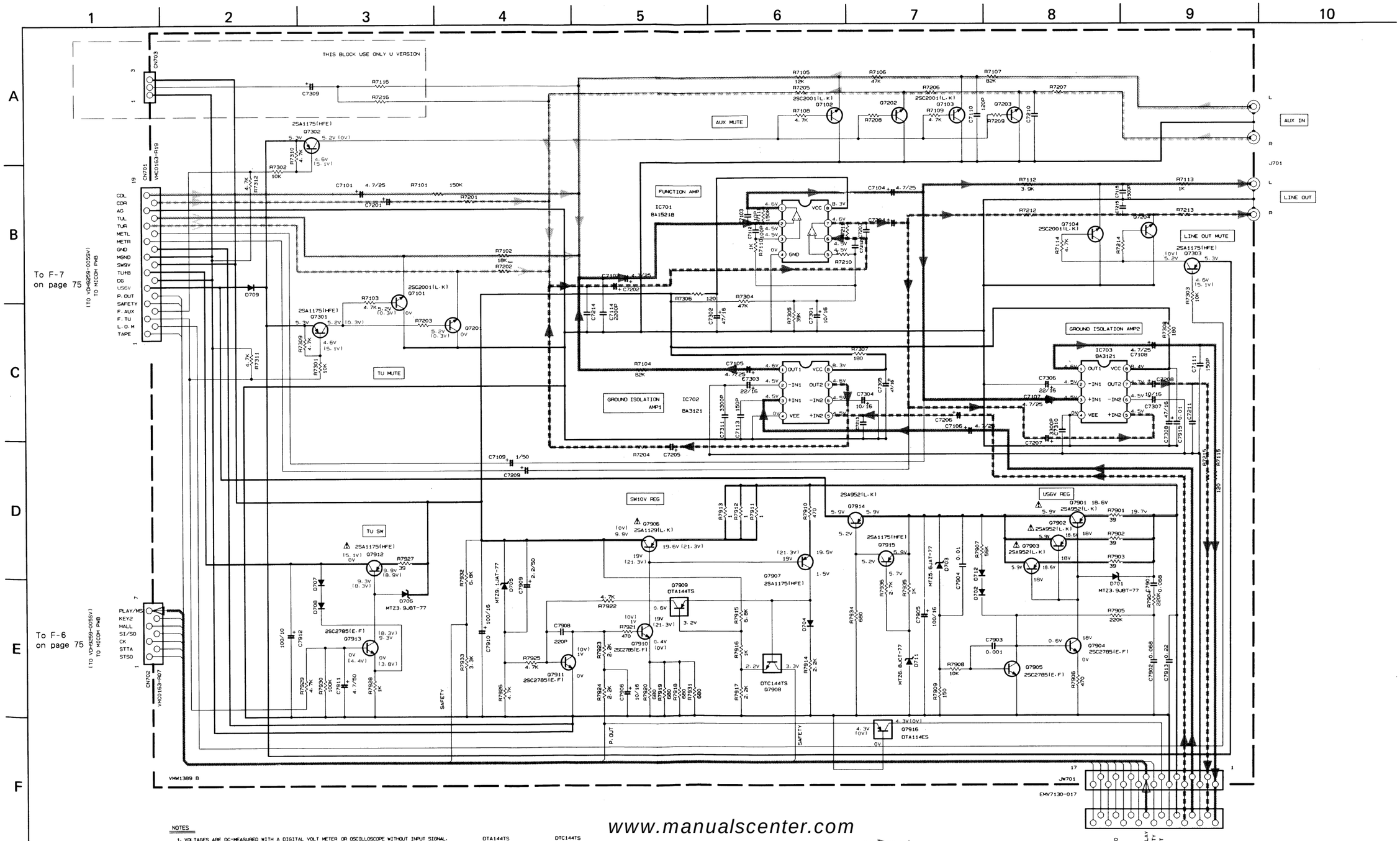

www.manualscenter.com

NOTES

1. VOLTAGES ARE DC-MEASURED WITH A DIGITAL VOLT METER OR OSCILLOSCOPE WITHOUT INPUT SIGNAL.
   CONDITION ---- CD STOP MODE AND ( ) IS INVERT MODE

2. UNLESS OTHERWISE SPECIFIED · RESISTORS ARE 1/6W ±5% CARBON RESISTOR.
   ALL RESISTANCE VALUES ARE IN OHM(Ω).
   ALL CAPACITORS ARE CERAMIC CAPACITOR OR MYLAR CAPACITOR.
   ALL CAPACITANCE VALUES ARE IN μF(P=pF).
   ALL INDUCTANCE VALUES ARE IN μH(m=mH).
   ALL E.CAPACITORS ARE SHOWN IN THE FORM OF CAPACITANCE (μF)/RATED VOLTAGE (V).
   ALL DIODES ARE 1SS254T.

DTA144TS DTC144TS

L R Playback signal line

MS Signal line

L R CD Signal line

L R AUX IN Signal line

L R Radio signal line

+B Line

Note
VDH9259005BV

Fig. 8-6

9 Location of p.c.board and parts list

1 2 3 4

A B C D E F

■ Microprocessor / function board

◆ Function board

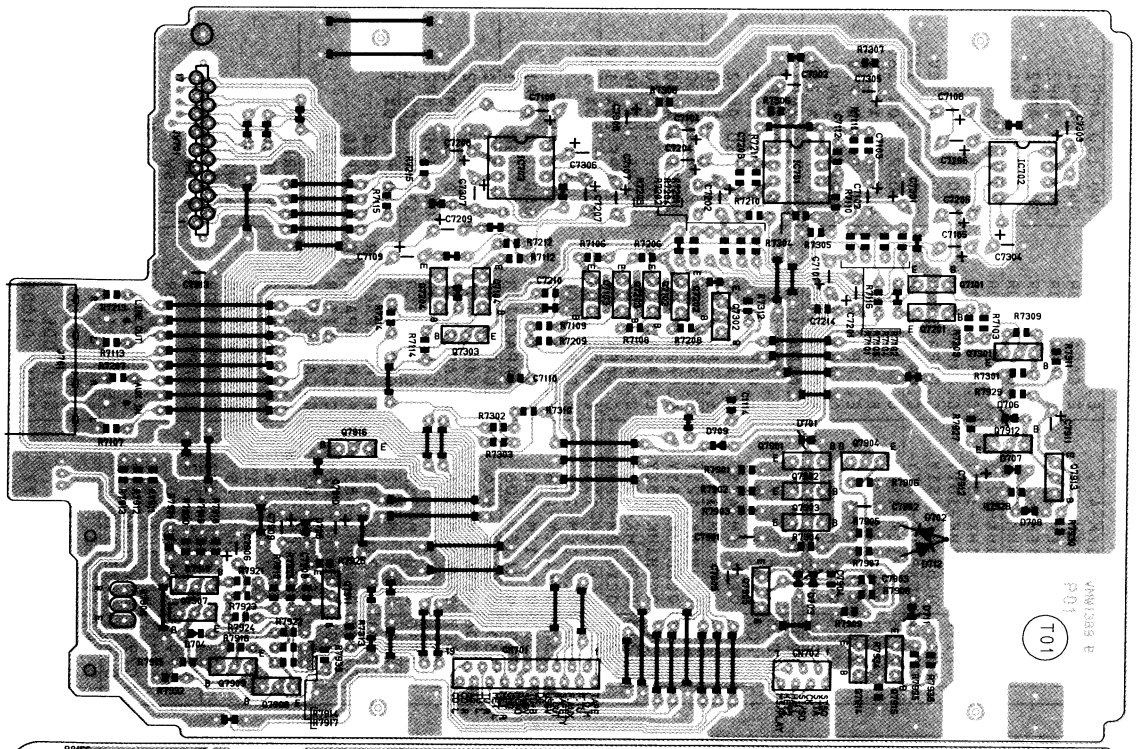

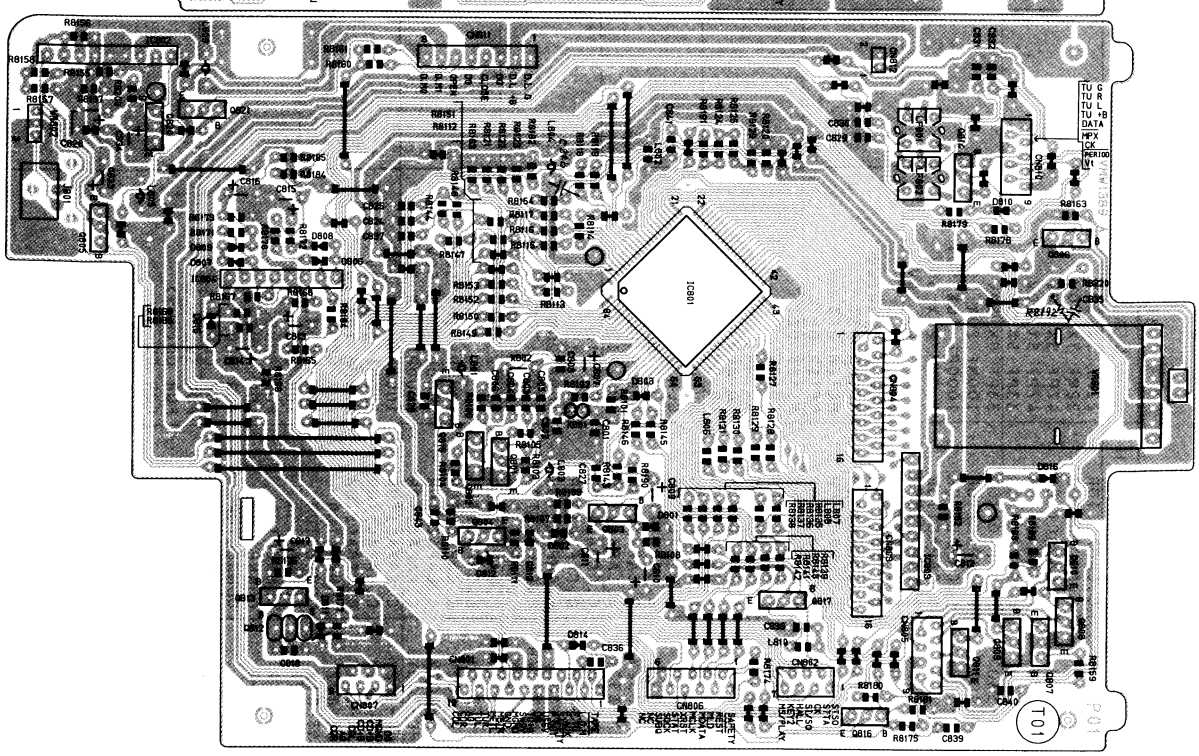

◆ Microprocessor board

Fig. 9-1

www.manualscenter.com

● Micro processor board parts list

BLOCK NO. 01

⚠	REF.	PARTS NO.	PARTS NAME	REMARKS	SUFFIX
	C 801	QCS11HJ-220	C.CAPACITOR	22PF 5% 50V	
	C 802	QCS11HJ-220	C.CAPACITOR	22PF 5% 50V	
	C 803	QCS11HJ-470	C.CAPACITOR	47PF 5% 50V	
	C 804	QCS11HJ-470	C.CAPACITOR	47PF 5% 50V	
	C 805	QCS11HJ-330	C.CAPACITOR	33PF 5% 50V	
	C 806	QCS11HJ-330	C.CAPACITOR	33PF 5% 50V	
	C 807	QET41AM-107	E.CAPACITOR	100MF 20% 10V	
	C 808	QCBB1HK-102Y	C.CAPACITOR	1000PF 10% 50V	
	C 809	QET41HM-105	E.CAPACITOR	1.0MF 20% 50V	
	C 810	QEK41CM-106	E.CAPACITOR	10MF 20% 16V	
	C 811	QETMOJM-228	E CAPACITOR	BUP	
	C 812	QET41AM-107	E.CAPACITOR	VOL MOT DRIVE	
	C 813	QET41AM-476	E.CAPACITOR	METER DET	
	C 814	QET41HM-475	E.CAPACITOR	METER DET	
	C 815	QET41HM-475	E.CAPACITOR	METER DET	
	C 816	QET41HM-475	E.CAPACITOR	METER DET	
	C 817	QET41CM-106	E.CAPACITOR	CD SW	
	C 818	QCVB1CN-103Y	C.CAPACITOR	CD SW	
	C 824	QCBB1HK-101Y	C.CAPACITOR	CD BUS	
	C 825	QCBB1HK-101Y	C.CAPACITOR	CD BUS	
	C 826	QCBB1HK-102Y	C.CAPACITOR	AVDD	
	C 827	QCBB1HK-151Y	C.CAPACITOR	CLK SHIFT	
	C 828	QET41AM-107	E.CAPACITOR	DOOR MOT DRIV	
	C 829	QCXB1CM-332Y	C.CAPACITOR	DOL FIL	
	C 830	QCXB1CM-332Y	C.CAPACITOR	DOL FIL	
	C 831	QCXB1CM-122Y	C.CAPACITOR	DOL FIL	
	C 832	QCXB1CM-122Y	C.CAPACITOR	DOL FIL	
	C 833	QET41CM-106	E.CAPACITOR	10MF 20% 16V	
	C 834	QETCOJM-227ZN	E.CAPACITOR	220MF 20% 6.3V	
	C 835	QCVB1CM-103Y	C.CAPACITOR	.010MF 20% 16V	
	C 836	QCBB1HK-151Y	C.CAPACITOR	150PF 10% 50V	
	C 837	QCBB1HK-271Y	C.CAPACITOR	270PF 10% 50V	
	C 838	QCBB1HK-102Y	C.CAPACITOR	1000PF 10% 50V	
	C 839	QCBB1HK-102Y	C.CAPACITOR	1000PF 10% 50V	
	C 840	QCBB1HK-102Y	C.CAPACITOR	1000PF 10% 50V	
	C 841	QCBB1HK-102Y	C.CAPACITOR	1000PF 10% 50V	
	C 842	QCBB1HK-151Y	C.CAPACITOR	150PF 10% 50V	
	C 843	QCBB1HK-151Y	C.CAPACITOR	150PF 10% 50V	
	CNF02	VMC0163-R07	CONNECTOR	FOR UCOM.2	
	CN701	VMC0163-R19	CONNECTOR	FOR UCOM.1	
	CN702	VMC0163-R07	CONNECTOR	FOR UCOM.2	
	CN801	VMC0163-R19	CONNECTOR	FOR FUNC.1	
	CN802	VMC0163-R07	CONNECTOR	FOR FUNC.2	
	CN803	VMC0163-016	CONNECTOR	FOR LCD	
	CN804	VMC0163-016	CONNECTOR	FOR LCD	
	CN805	VMC0163-009	CONNECTOR	FOR SW	
	CN806	VMC0163-R11	CONNECTOR	FOR CD(BUS)	
	CN807	VMC0163-R07	CONNECTOR	FOR CD	
	CN810	VMC0163-009	CONNECTOR	FOR TUNNER	
	CN811	VMC0041-008	CONNECTOR	FOR MOT/SW	
	CN812	VMC0075-002	CONNECTOR	FOR LAMP	
	C7101	QEK41EM-475	E.CAPACITOR	4.7MF 20% 25V	
	C7102	QEK41EM-475	E.CAPACITOR	4.7MF 20% 25V	
	C7103	QCS11HJ-100	C.CAPACITOR	10PF 5% 50V	
	C7104	QEK41EM-475	E.CAPACITOR	4.7MF 20% 25V	

BLOCK NO. 01

⚠	REF.	PARTS NO.	PARTS NAME	REMARKS	SUFFIX
	C7105	QEK41EM-475	E.CAPACITOR	GND ISO AMP1	
	C7106	QEK41EM-475	E.CAPACITOR	GND ISO AMP1	
	C7107	QEK41EM-475	E.CAPACITOR	GND ISO AMP2	
	C7108	QEK41EM-475	E.CAPACITOR	GND ISO AMP2	
	C7109	QEK41HM-105	E.CAPACITOR	1.0MF 20% 50V	
	C7110	QCBB1HK-121Y	C.CAPACITOR	120PF 10% 50V	
	C7111	QCBB1HK-151Y	C.CAPACITOR	150PF 10% 50V	
	C7112	QCBB1HK-101Y	C.CAPACITOR	100PF 10% 50V	
	C7113	QCBB1HK-151Y	C.CAPACITOR	150PF 10% 50V	
	C7114	QCXB1CM-222Y	C.CAPACITOR	2200PF 20% 16V	
	C7115	QCXB1CM-152Y	C.CAPACITOR	1500PF 20% 16V	
	C7201	QEK41EM-475	E.CAPACITOR	4.7MF 20% 25V	
	C7202	QEK41EM-475	E.CAPACITOR	4.7MF 20% 25V	
	C7203	QCS11HJ-100	C.CAPACITOR	10PF 5% 50V	
	C7204	QEK41EM-475	E.CAPACITOR	4.7MF 20% 25V	
	C7205	QEK41EM-475	E.CAPACITOR	GND ISO AMP1	
	C7206	QEK41EM-475	E.CAPACITOR	GND ISO AMP1	
	C7207	QEK41EM-475	E.CAPACITOR	GND ISO AMP2	
	C7208	QEK41EM-475	E.CAPACITOR	GND ISO AMP2	
	C7209	QEK41HM-105	E.CAPACITOR	1.0MF 20% 50V	
	C7210	QCBB1HK-121Y	C.CAPACITOR	120PF 10% 50V	
	C7211	QCBB1HK-151Y	C.CAPACITOR	150PF 10% 50V	
	C7212	QCBB1HK-101Y	C.CAPACITOR	100PF 10% 50V	
	C7213	QCBB1HK-151Y	C.CAPACITOR	150PF 10% 50V	
	C7214	QCXB1CM-222Y	C.CAPACITOR	2200PF 20% 16V	
	C7215	QCXB1CM-152Y	C.CAPACITOR	1500PF 20% 16V	
	C7301	QEK41CM-106	E.CAPACITOR	FUNCTION	
	C7302	QEK41CM-476	E.CAPACITOR	FUNCTION	
	C7303	QEK41CM-226	E.CAPACITOR	GND ISO AMP1	
	C7304	QEK41CM-106	E.CAPACITOR	GND ISO AMP1	
	C7305	QEK41CM-476	E.CAPACITOR	GND ISO AMP1	
	C7306	QEK41CM-226	E.CAPACITOR	GND ISO AMP2	
	C7307	QEK41CM-106	E.CAPACITOR	GND ISO AMP2	
	C7308	QEK41CM-476	E.CAPACITOR	GND ISO AMP2	
	C7310	QCXB1CM-332Y	C.CAPACITOR	3300PF 20% 16V	
	C7311	QCXB1CM-332Y	C.CAPACITOR	3300PF 20% 16V	
	C7901	QFV71HJ-683ZM	FILM CAPACITOR	US6VREG	
	C7902	QFV71HJ-683ZM	FILM CAPACITOR	US6VREG	
	C7903	QCBB1HK-102Y	C.CAPACITOR	US6VREG	
	C7904	QCVB1CM-103Y	C.CAPACITOR	US6VREG	
	C7905	QEK61CM-107ZN	E.CAPACITOR	US6VREG	
	C7906	QEK41CM-106	E.CAPACITOR	SW9VREG	
	C7908	QCBB1HK-221Y	C.CAPACITOR	SW9VREG	
	C7909	QEK41HM-225	E.CAPACITOR	SW9VREG	
	C7910	QEK61CM-107ZN	E.CAPACITOR	SW9VREG	
	C7911	QEK61HM-475ZN	E.CAPACITOR	TU SW	
	C7912	QEK51AM-107	E CAPACITOR	TU SW	
	C7913	QFV41HJ-224	FILM CAPACITOR	.22MF 5% 50V	
	C7915	QCVB1CN-103Y	C.CAPACITOR	.010MF 30% 16V	
	D 701	MTZ3.9JB	ZENER DIODE	US6VREG	
	D 702	1SS133	SI DIODE	US6VREG	
	D 703	MTZ5.6JA	ZENER DIODE	US6VREG	
	D 704	1SS133	SI DIODE	SW9VREG	
	D 705	MTZ10JAT-77	ZENER DIODE	SW9VREG	
	D 706	MTZ3.9JB	ZENER DIODE	TU SW	

BLOCK NO. 01

⚠	REF.	PARTS NO.	PARTS NAME	REMARKS	SUFFIX
	D 707	1SS133	SI DIODE	TU SW	
	D 708	1SS133	SI DIODE	TU SW	
	D 709	1SS133	SI DIODE		
	D 711	MTZ6.8JC	ZENER DIODE		
	D 712	1SS133	SI DIODE		
	D 801	1SS133	SI DIODE	RESET	
	D 802	1SS133	SI DIODE		
	D 803	1SS133	SI DIODE	XKILL	
	D 806	1SS133	SI DIODE	METER DET	
	D 807	1SS133	SI DIODE	METER DET	
	D 808	1SS133	SI DIODE	METER DET	
	D 809	1SS133	SI DIODE	METER DET	
	D 810	1SS133	SI DIODE	TU CK	
	D 811	MTZ4.3JB	ZENER DIODE	FOR CD+B	
	D 812	MTZ4.7JB	ZENER DIODE		
	D 813	1SS133	SI DIODE		
	D 814	1SS133	SI DIODE		
	D 815	MTZ6.8JAT-77	ZENER DIODE		
	D 816	1SS133	SI DIODE		
	ICF01	BA15218	IC	FUNCTION AMP	
	ICF03	BA3121	IC	GND ISOLAT AMP1	
	ICF04	BA3121	IC	GND ISOLAT AMP2	
	ICM01	MN171603J8C1	IC	SYSTEM MICON	
	IC701	BA15218	IC	FUNCTION AMP	
	IC702	BA3121	IC	GND ISOLAT AMP1	
	IC703	BA3121	IC	GND ISOLAT AMP2	
	IC801	MN171603J8C1	IC	SYSTEM MICON	
	IC802	TA8409S	IC	CD DOOR	
	IC803	BA6208A	IC	VOL MOT	
	IC804	BA10358N	IC	MET DETEC	
	J 701	EMN00TV-421AJ2	PIN JACK	AUX/L.OUT	
	J 801	GP1F32T	OPTICAL JACK	OPT DIG OUT	
	L 801	VQP0028-100Z	INDUCTOR	VDD	
	L 802	VQP0018-4R7	INDUCTOR	AVDD	
	L 803	VQZ0048-009	INDUCTOR	VSS	
	L 804	VQZ0048-009	INDUCTOR	AVSS	
	L 805	VQP0028-221Z	INDUCTOR		
	L 806	VQP0018-470	INDUCTOR		
	L 807	VQP0018-470	INDUCTOR		
	L 808	VQP0018-470	INDUCTOR		
	L 809	VQZ0048-009	INDUCTOR		
	L 810	VQP0018-221	INDUCTOR		
	LF801	EQF0101-010	FILTER	DOLBY FILTER	
	LF802	EQF0101-010	FILTER	DOLBY FILTER	
	Q 801	2SC2668(O)	TRANSISTOR	CLK SHIFT	
	Q 802	2SC2668(O)	TRANSISTOR	CLK SHIFT	
	Q 803	DTC114TSTP	TRANSISTOR	RESET	
	Q 804	DTC114TSTP	TRANSISTOR	BUP SW	
	Q 805	DTC144ES	TRANSISTOR	MOT SPD CTL	
	Q 806	DTC114ESTP	TRANSISTOR	VOL LED DRIV	
	Q 807	2SA1175	TRANSISTOR	LED DRIVER	
	Q 808	DTC114ESTP	TRANSISTOR	LED DRIVER	
	Q 809	DTC114YS	TRANSISTOR	LED DRIVER	
	Q 810	DTC114ESTP	TRANSISTOR	LED DRIVER	
	Q 811	DTC114ESTP	TRANSISTOR	LED DRIVER	

BLOCK NO. 01

⚠	REF.	PARTS NO.	PARTS NAME	REMARKS	SUFFIX
⚠	Q 812	2SB772(Q,P)	TRANSISTOR	CD SW	
	Q 813	2SC2785	TRANSISTOR	CD SW	
	Q 814	DTC144TS	TRANSISTOR	TU DATA	
	Q 815	DTA114TS	TRANSISTOR	A/D SWITCH	
	Q 816	2SC2785	TRANSISTOR	CD SAFETY	
	Q 818	2SC2785	TRANSISTOR		
	Q 820	DTC143TS	TRANSISTOR		
	Q 821	2SC2785	TRANSISTOR		
⚠	QF 01	2SA952(L,K)	TRANSISTOR	US6VREG	
⚠	QF 02	2SA952(L,K)	TRANSISTOR	US6VREG	
⚠	QF 03	2SA952(L,K)	TRANSISTOR	US6VREG	
	QF 11	2SC2785	TRANSISTOR	SW9VREG	
	Q7101	2SC2001(L,K)	TRANSISTOR	TU MUTE	
	Q7102	2SC2001(L,K)	TRANSISTOR	AUX MUTE	
	Q7103	2SC2001(L,K)	TRANSISTOR	AUX MUTE	
	Q7104	2SC2001(L,K)	TRANSISTOR	L.OUT MUTE	
	Q7201	2SC2001(L,K)	TRANSISTOR	TU MUTE	
	Q7202	2SC2001(L,K)	TRANSISTOR	AUX MUTE	
	Q7203	2SC2001(L,K)	TRANSISTOR	AUX MUTE	
	Q7204	2SC2001(L,K)	TRANSISTOR	L.OUT MUTE	
	Q7301	2SA1175	TRANSISTOR	TU MUTE	
	Q7302	2SA1175	TRANSISTOR	AUX MUTE	
	Q7303	2SA1175	TRANSISTOR	L.OUT MUTE	
⚠	Q7901	2SA952(L,K)	TRANSISTOR	US6VREG	
⚠	Q7902	2SA952(L,K)	TRANSISTOR	US6VREG	
⚠	Q7903	2SA952(L,K)	TRANSISTOR	US6VREG	
	Q7904	2SC2785	TRANSISTOR	US6VREG	
	Q7905	2SC2785	TRANSISTOR	US6VREG	
⚠	Q7906	2SA1129(K)	TRANSISTOR	SW9VREG	
	Q7907	2SA1175	TRANSISTOR	SW9VREG	
	Q7908	DTC144TS	TRANSISTOR	SW9VREG	
	Q7909	UN4110	TR I/M	SW9VREG	
	Q7910	2SC2785	TRANSISTOR	SW9VREG	
	Q7911	2SC2785	TRANSISTOR	SW9VREG	
	Q7912	2SA1175	TRANSISTOR	TU SW	
	Q7913	2SC2785	TRANSISTOR	TU SW	
	Q7914	2SA952(L,K)	TRANSISTOR		
	Q7916	DTA114ES	TRANSISTOR		
	R7101	QRD161J-154	CARBON RESISTOR	150K 5% 1/6W	
	R7102	QRD161J-183	CARBON RESISTOR	18K 5% 1/6W	
	R7103	QRD161J-472	CARBON RESISTOR	4.7K 5% 1/6W	
	R7104	QRD161J-823	CARBON RESISTOR	82K 5% 1/6W	
	R7105	QRD161J-123	CARBON RESISTOR	AUX IN	
	R7106	QRD161J-473	CARBON RESISTOR	AUX IN	
	R7107	QRD161J-823	CARBON RESISTOR	AUX IN	
	R7108	QRD161J-472	CARBON RESISTOR	AUX MUTE	
	R7109	QRD161J-472	CARBON RESISTOR	AUX MUTE	
	R7110	QRD161J-102	CARBON RESISTOR	1.0K 5% 1/6W	
	R7111	QRD161J-154	CARBON RESISTOR	150K 5% 1/6W	
	R7112	QRD161J-392	CARBON RESISTOR	LINE OUT	
	R7113	QRD161J-102	CARBON RESISTOR	LINE OUT	
	R7114	QRD161J-472	CARBON RESISTOR	L.O.MUTE	
	R7115	QRD161J-121	CARBON RESISTOR	120 5% 1/6W	
	R7201	QRD161J-154	CARBON RESISTOR	150K 5% 1/6W	
	R7202	QRD161J-183	CARBON RESISTOR	18K 5% 1/6W	

www.manualscenter.com

BLOCK NO. 01

⚠	REF.	PARTS NO.	PARTS NAME	REMARKS	SUFFIX
	R7203	QRD161J-472	CARBON RESISTOR	4.7K 5% 1/6W	
	R7204	QRD161J-823	CARBON RESISTOR	82K 5% 1/6W	
	R7205	QRD161J-123	CARBON RESISTOR	AUX IN	
	R7206	QRD161J-473	CARBON RESISTOR	AUX IN	
	R7207	QRD161J-823	CARBON RESISTOR	AUX IN	
	R7208	QRD161J-472	CARBON RESISTOR	AUX MUTE	
	R7209	QRD161J-472	CARBON RESISTOR	AUX MUTE	
	R7210	QRD161J-102	CARBON RESISTOR	1.0K 5% 1/6W	
	R7211	QRD161J-154	CARBON RESISTOR	150K 5% 1/6W	
	R7212	QRD161J-392	CARBON RESISTOR	LINE OUT	
	R7213	QRD161J-102	CARBON RESISTOR	LINE OUT	
	R7214	QRD161J-472	CARBON RESISTOR	L.O.MUTE	
	R7215	QRD161J-121	CARBON RESISTOR	120 5% 1/6W	
	R7301	QRD161J-103	CARBON RESISTOR	TU MUTE	
	R7302	QRD161J-103	CARBON RESISTOR	AUX MUTE	
	R7303	QRD161J-103	CARBON RESISTOR	L.O.MUTE	
	R7304	QRD161J-473	CARBON RESISTOR	FUNCTION	
	R7305	QRD161J-393	CARBON RESISTOR	FUNCTION	
	R7306	QRD161J-121	CARBON RESISTOR	FUNCTION	
	R7307	QRD161J-181	CARBON RESISTOR	GND ISO AMP1	
	R7308	QRD161J-181	CARBON RESISTOR	GND ISO AMP2	
	R7309	QRD161J-472	CARBON RESISTOR	4.7K 5% 1/6W	
	R7310	QRD161J-472	CARBON RESISTOR	4.7K 5% 1/6W	
	R7311	QRD161J-472	CARBON RESISTOR	4.7K 5% 1/6W	
	R7312	QRD161J-472	CARBON RESISTOR	4.7K 5% 1/6W	
	R7313	QRD167J-682	CARBON RESISTOR	6.8K 5% 1/6W	
	R7901	QRD161J-390	CARBON RESISTOR	US6VREG	
	R7902	QRD161J-390	CARBON RESISTOR	US6VREG	
	R7903	QRD161J-390	CARBON RESISTOR	US6VREG	
	R7904	QRD161J-224	CARBON RESISTOR	US6VREG	
	R7905	QRD161J-224	CARBON RESISTOR	US6VREG	
	R7906	QRD161J-471	CARBON RESISTOR	US6VREG	
	R7907	QRD161J-563	CARBON RESISTOR	US6VREG	
	R7908	QRD161J-103	CARBON RESISTOR	US6VREG	
	R7909	QRD161J-151	CARBON RESISTOR	US6VREG	
	R7910	QRD161J-471	CARBON RESISTOR	SW9REG	
	R7911	QRD161J-1R0	CARBON RESISTOR	SW9REG	
	R7912	QRD161J-1R0	CARBON RESISTOR	SW9REG	
	R7913	QRD161J-1R0	CARBON RESISTOR	SW9REG	
	R7914	QRD161J-222	CARBON RESISTOR	SW9REG	
	R7915	QRD167J-682	CARBON RESISTOR	SW9REG	
	R7916	QRD161J-102	CARBON RESISTOR	SW9REG	
	R7917	QRD161J-222	CARBON RESISTOR	SW9REG	
	R7918	QRD161J-681	CARBON RESISTOR	SW9REG	
	R7919	QRD161J-681	CARBON RESISTOR	SW9REG	
	R7920	QRD161J-681	CARBON RESISTOR	SW9REG	
	R7921	QRD161J-471	CARBON RESISTOR	SW9REG	
	R7922	QRD161J-472	CARBON RESISTOR	SW9REG	
	R7923	QRD161J-222	CARBON RESISTOR	SW9REG	
	R7924	QRD161J-222	CARBON RESISTOR	SW9REG	
	R7925	QRD161J-472	CARBON RESISTOR	SW9REG	
	R7926	QRD161J-472	CARBON RESISTOR	SW9REG	
	R7927	QRD161J-390	CARBON RESISTOR	TU SW	
	R7928	QRD161J-102	CARBON RESISTOR	TU SW	
	R7929	QRD161J-472	CARBON RESISTOR	TU SW	

BLOCK NO. 01

⚠	REF.	PARTS NO.	PARTS NAME	REMARKS	SUFFIX
	R7930	QRD161J-104	CARBON RESISTOR	TU SW	
	R7931	QRD161J-681	CARBON RESISTOR	680 5% 1/6W	
	R7932	QRD167J-682	CARBON RESISTOR	6.8K 5% 1/6W	
	R7933	QRD167J-332	CARBON RESISTOR	3.3K 5% 1/6W	
	R7934	QRD161J-681	CARBON RESISTOR	680 5% 1/6W	
	R7935	QRD161J-102	CARBON RESISTOR	1.0K 5% 1/6W	
	R7936	QRD161J-272	CARBON RESISTOR	2.7K 5% 1/6W	
	R8101	QRD161J-104	CARBON RESISTOR	100K 5% 1/6W	
	R8102	QRD161J-224	CARBON RESISTOR	220K 5% 1/6W	
	R8103	QRD161J-681	CARBON RESISTOR	680 5% 1/6W	
	R8104	QRD161J-681	CARBON RESISTOR	680 5% 1/6W	
	R8105	QRD161J-822	CARBON RESISTOR	8.2K 5% 1/6W	
	R8106	QRD161J-822	CARBON RESISTOR	8.2K 5% 1/6W	
	R8107	QRD161J-331	CARBON RESISTOE	330 5% 1/6W	
	R8108	QRD161J-103	CARBON RESISTOR	10K 5% 1/6W	
	R8109	QRD161J-472	CARBON RESISTOR	4.7K 5% 1/6W	
	R8110	QRD161J-103	CARBON RESISTOR	10K 5% 1/6W	
	R8111	QRD161J-102	CARBON RESISTOR	1.0K 5% 1/6W	
	R8112	QRD161J-222	CARBON RESISTOR	2.2K 5% 1/6W	
	R8113	QRD161J-222	CARBON RESISTOR	2.2K 5% 1/6W	
	R8114	QRD161J-222	CARBON RESISTOR	2.2K 5% 1/6W	
	R8115	QRD161J-222	CARBON RESISTOR	2.2K 5% 1/6W	
	R8116	QRD161J-222	CARBON RESISTOR	2.2K 5% 1/6W	
	R8117	QRD161J-222	CARBON RESISTOR	2.2K 5% 1/6W	
	R8118	QRD161J-222	CARBON RESISTOR	2.2K 5% 1/6W	
	R8119	QRD161J-222	CARBON RESISTOR	2.2K 5% 1/6W	
	R8120	QRD161J-103	CARBON RESISTOR	PULL UP	
	R8121	QRD161J-103	CARBON RESISTOR	PULL UP	
	R8122	QRD161J-103	CARBON RESISTOR	PULL UP	
	R8123	QRD161J-103	CARBON RESISTOR	PULL UP	
	R8124	QRD161J-103	CARBON RESISTOR	10K 5% 1/6W	
	R8125	QRD161J-103	CARBON RESISTOR	10K 5% 1/6W	
	R8126	QRD161J-103	CARBON RESISTOR	10K 5% 1/6W	
	R8127	QRD161J-222	CARBON RESISTOR	2.2K 5% 1/6W	
	R8128	QRD161J-222	CARBON RESISTOR	2.2K 5% 1/6W	
	R8129	QRD161J-222	CARBON RESISTOR	2.2K 5% 1/6W	
	R8130	QRD161J-222	CARBON RESISTOR	2.2K 5% 1/6W	
	R8131	QRD161J-222	CARBON RESISTOR	2.2K 5% 1/6W	
	R8135	QRD161J-222	CARBON RESISTOR	2.2K 5% 1/6W	
	R8136	QRD161J-222	CARBON RESISTOR	2.2K 5% 1/6W	
	R8137	QRD161J-222	CARBON RESISTOR	2.2K 5% 1/6W	
	R8138	QRD161J-222	CARBON RESISTOR	2.2K 5% 1/6W	
	R8139	QRD161J-102	CARBON RESISTOR	1.0K 5% 1/6W	
	R8140	QRD161J-102	CARBON RESISTOR	1.0K 5% 1/6W	
	R8141	QRD161J-102	CARBON RESISTOR	1.0K 5% 1/6W	
	R8142	QRD161J-102	CARBON RESISTOR	1.0K 5% 1/6W	
	R8143	QRD161J-222	CARBON RESISTOR	2.2K 5% 1/6W	
	R8144	QRD161J-102	CARBON RESISTOR	1.0K 5% 1/6W	
	R8145	QRD161J-222	CARBON RESISTOR	2.2K 5% 1/6W	
	R8146	QRD161J-222	CARBON RESISTOR	2.2K 5% 1/6W	
	R8147	QRD161J-102	CARBON RESISTOR	1.0K 5% 1/6W	
	R8148	QRD161J-102	CARBON RESISTOR	1.0K 5% 1/6W	
	R8149	QRD161J-222	CARBON RESISTOR	2.2K 5% 1/6W	
	R8150	QRD161J-222	CARBON RESISTOR	2.2K 5% 1/6W	
	R8151	QRD161J-222	CARBON RESISTOR	2.2K 5% 1/6W	

BLOCK NO. 01

⚠	REF.	PARTS NO.	PARTS NAME	REMARKS	SUFFIX
	R8152	QRD161J-222	CARBON RESISTOR	2.2K 5% 1/6W	
	R8153	QRD161J-222	CARBON RESISTOR	2.2K 5% 1/6W	
	R8154	QRD161J-222	CARBON RESISTOR	2.2K 5% 1/6W	
	R8155	QRD161J-151	CARBON RESISTOR	DOOR MOT DRIV	
	R8156	QRD161J-123	CARBON RESISTOR	DOOR MOT DRIV	
	R8157	QRD161J-183	CARBON RESISTOR	DOOR MOT DRIV	
	R8158	QRD161J-183	CARBON RESISTOR	DOOR MOT DRIV	
	R8159	QRD161J-472	CARBON RESISTOR	STBY LED DRIV	
	R8160	QRD161J-913	CARBON RESISTOR	DOOR CLOSE	
	R8161	QRD161J-102	CARBON RESISTOR	DOOR OPEN	
	R8162	QRD167J-4R7	CARBON RESISTOR	VOL MOT DRIVE	
	R8163	QRD161J-271	CARBON RESISTOR	VOL LED DRIVE	
	R8164	QRD161J-183	CARBON RESISTOR	METER DET	
	R8165	QRD161J-183	CARBON RESISTOR	METER DET	
	R8166	QRD161J-473	CARBON RESISTOR	METER DET	
	R8167	QRD161J-473	CARBON RESISTOR	METER DET	
	R8168	QRD161J-221	CARBON RESISTOR	METER DET	
	R8169	QRD161J-103	CARBON RESISTOR	METER DET	
	R8170	QRD161J-683	CARBON RESISTOR	METER DET	
	R8171	QRD161J-683	CARBON RESISTOR	METER DET	
	R8172	QRD161J-393	CARBON RESISTOR	METER DET	
	R8173	QRD161J-393	CARBON RESISTOR	METER DET	
	R8174	QRD161J-473	CARBON RESISTOR	CD REST	
	R8175	QRD161J-103	CARBON RESISTOR	CD SW	
	R8176	QRD161J-103	CARBON RESISTOR	CD SW	
	R8177	QRD161J-221	CARBON RESISTOR	CD SW	
	R8178	QRD161J-222	CARBON RESISTOR	TU DATA	
	R8179	QRD161J-222	CARBON RESISTOR	TU CK	
	R8180	QRD161J-103	CARBON RESISTOR	CD SAFETY	
	R8181	QRD161J-103	CARBON RESISTOR	CD SAFETY	
	R8182	QRD161J-104	CARBON RESISTOR	SAFETY P.UP	
	R8184	QRD161J-222	CARBON RESISTOR	2.2K 5% 1/6W	
	R8185	QRD161J-222	CARBON RESISTOR	2.2K 5% 1/6W	
	R8186	QRD161J-681	CARBON RESISTOR	680 5% 1/6W	
	R8187	QRD161J-103	CARBON RESISTOR	10K 5% 1/6W	
	R8188	QRD161J-472	CARBON RESISTOR	4.7K 5% 1/6W	
	R8189	QRD161J-472	CARBON RESISTOR	4.7K 5% 1/6W	
	R8190	QRD161J-222	CARBON RESISTOR	2.2K 5% 1/6W	
	R8191	QRD161J-182	CARBON RESISTOR	1.8K 5% 1/6W	
	R8197	QRD161J-3R9	CARBON RESISTOR	3.9 5% 1/6W	
	R8200	QRD161J-391	CARBON RESISTOR	390 5% 1/6W	
	R8220	QRD161J-153	CARBON RESISTOR	15K 5% 1/6W	
	VR801	VCV1001-163	V.RESISTOR	MAIN VOL	
	X 801	VCX5000-002	CRYSTAL	SUB	
	X 802	CSA4.19MG933	CERA LOCK	MAIN	

www.manualscenter.com

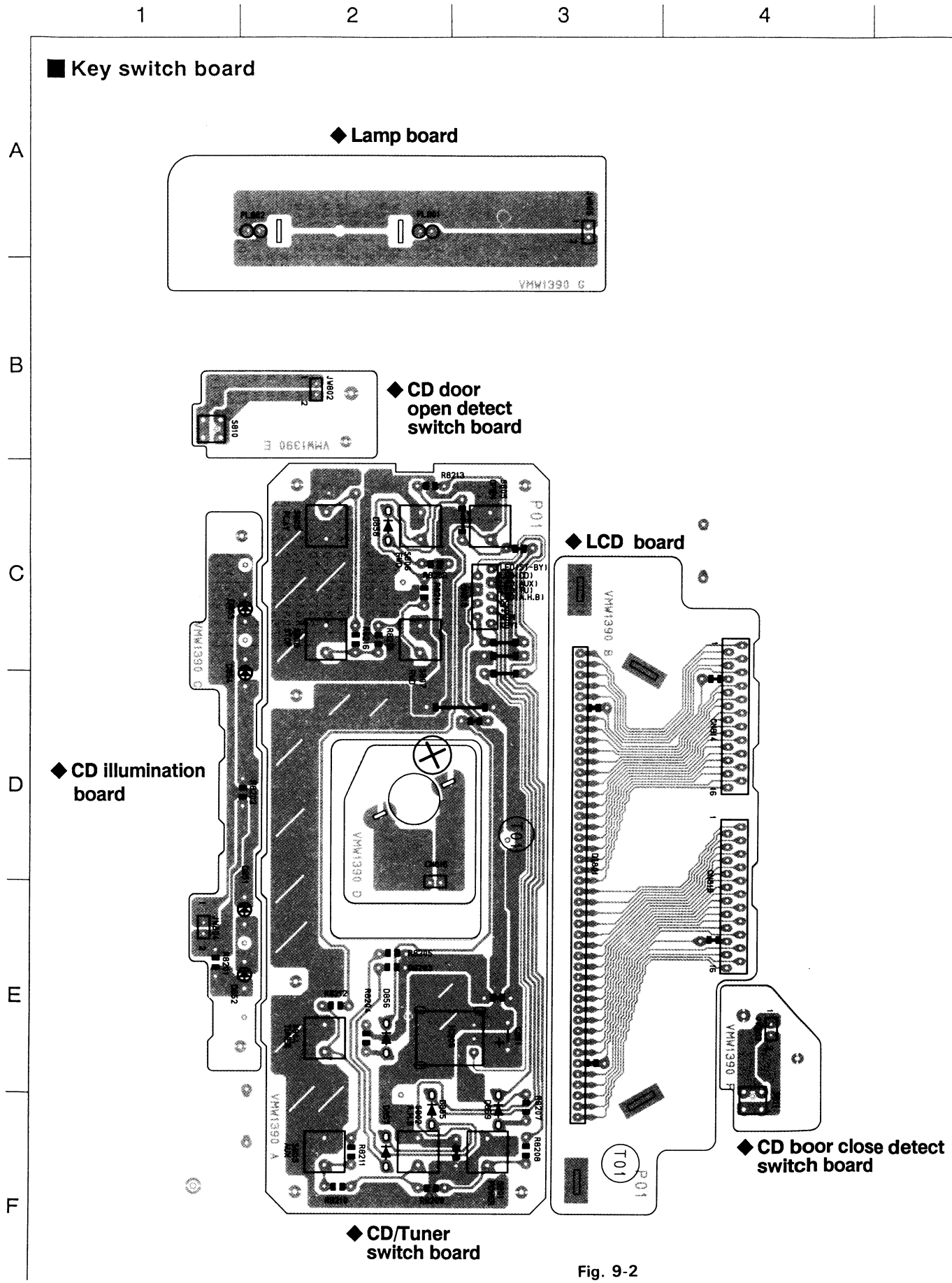

Fig. 9-2

www.manualscenter.com

● Key switch board parts list

BLOCK NO. 02

⚠	REF.	PARTS NO.	PARTS NAME	REMARKS	SUFFIX
	C 851	QEK41CM-476	E.CAPACITOR	47MF 20% 16V	
	CN813	VMC0163-R09	CONNECTOR	TO MICON	
	CN814	VMC0163-016	CONNECTOR		
	CN815	VMC0163-016	CONNECTOR		
	CN816	VMC0075-002	CONNECTOR		
	D 851	SLZ-481C09-T6	LED	DISK LIGHT UP	
	D 852	SLZ-381F09-T6	LED	DISK LIGHT UP	
	D 853	SLZ-381F09-T6	LED	DISK LIGHT UP	
	D 854	SLZ-481C09-T6	LED	DISK LIGHT UP	
	D 855	SLR-325VCT31	LED	A.H.B	
	D 856	SLR-325MCT31	LED	F.TU	
	D 857	SLR-325MCT31	LED	F.AUX	
	D 858	SLR-325MCT31	LED	F.CD	
	D 859	SLR-325VCT31	LED	STAND-BY	
	DI801	VGL1182-001	LCD	LCD	
	IC805	SBX1780-52	RM RECIVER		
	PL801	VGZ0001-053	LAMP		
	PL802	VGZ0001-053	LAMP		
	R8201	QRD161J-391	CARBON RESISTOR	390 5% 1/6W	
	R8202	QRD161J-391	CARBON RESISTOR	390 5% 1/6W	
	R8203	QRD161J-271	CARBON RESISTOR	270 5% 1/6W	
	R8204	QRD161J-271	CARBON RESISTOR	270 5% 1/6W	
	R8205	QRD161J-271	CARBON RESISTOR	270 5% 1/6W	
	R8206	QRD161J-271	CARBON RESISTOR	270 5% 1/6W	
	R8207	QRD161J-271	CARBON RESISTOR	270 5% 1/6W	
	R8208	QRD161J-102	CARBON RESISTOR	1.0K 5% 1/6W	
	R8209	QRD161J-102	CARBON RESISTOR	1.0K 5% 1/6W	
	R8210	QRD161J-122	CARBON RESISTOR	1.2K 5% 1/6W	
	R8211	QRD161J-152	CARBON RESISTOR	1.5K 5% 1/6W	
	R8212	QRD161J-222	CARBON RESISTOR	2.2K 5% 1/6W	
	R8213	QRD161J-272	CARBON RESISTOR	2.7K 5% 1/6W	
	R8214	QRD161J-392	CARBON RESISTOR	3.9K 5% 1/6W	
	R8215	QRD167J-562	CARBON RESISTOR	5.6K 5% 1/6W	
	R8216	QRD161J-103	CARBON RESISTOR	10K 5% 1/6W	
	S 801	QSQ1A11-V04Z	TACT SWITCH	POWER	
	S 802	QSQ1A11-V04Z	TACT SWITCH	A.H.B	
	S 803	QSQ1A11-V04Z	TACT SWITCH	AUX	
	S 804	QSQ1A11-V04Z	TACT SWITCH	TUNER	
	S 805	QSQ1A11-V04Z	TACT SWITCH	DOOR OPEN	
	S 806	QSQ1A11-V04Z	TACT SWITCH	FFD	
	S 807	QSQ1A11-V04Z	TACT SWITCH	RFD	
	S 808	QSQ1A11-V04Z	TACT SWITCH	STOP	
	S 809	QSQ1A11-V04Z	TACT SWITCH	PLAY	
	S 810	QSP2K21-V01	PUSH SWITCH	DOOR OPEN SW	
	S 811	QSP2K21-V01	PUSH SWITCH	DOOR CLOSE SW	

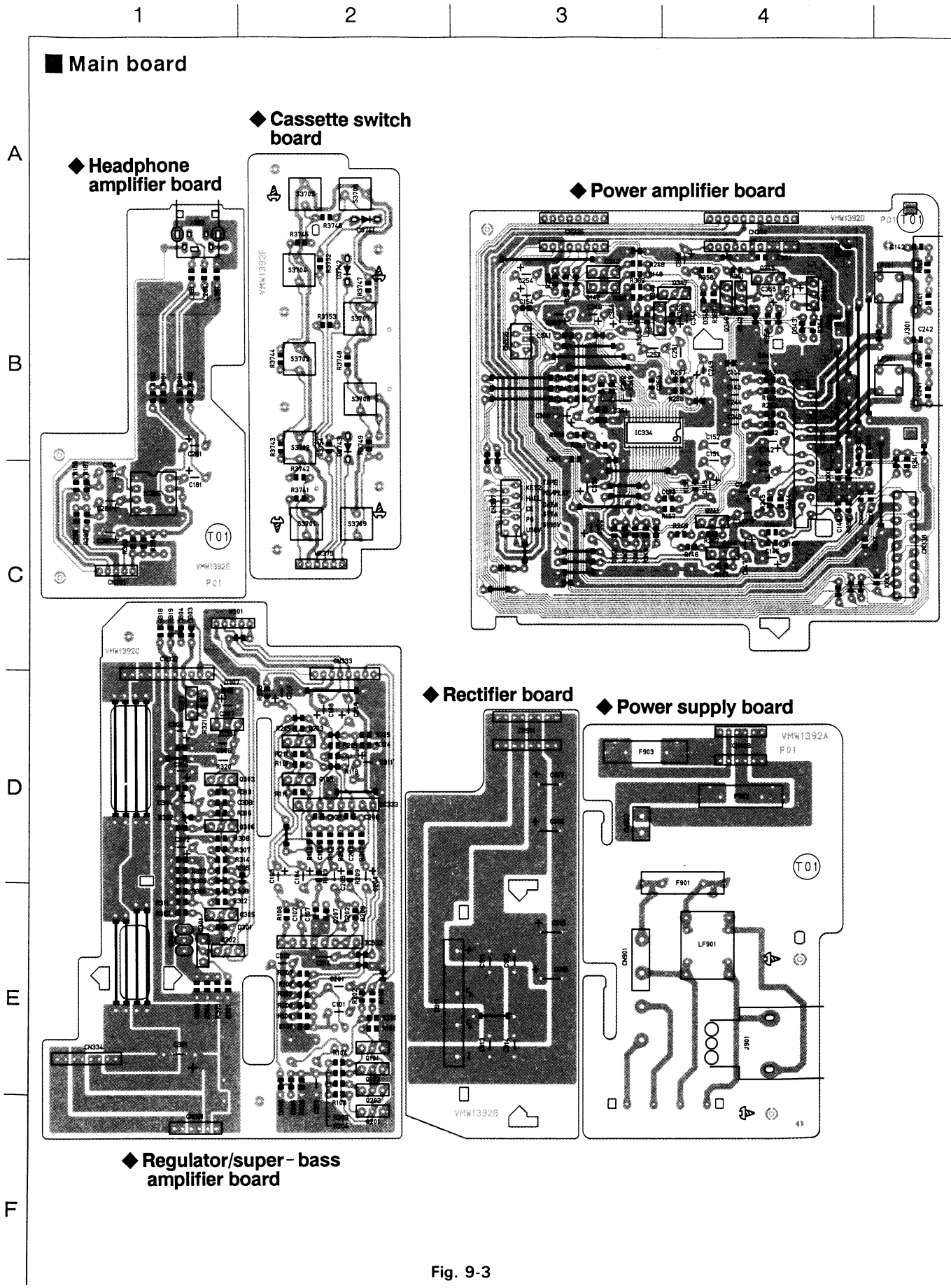

Fig. 9-3

www.manualscenter.com

● Main board parts list

BLOCK NO. 04

⚠	REF.	PARTS NO.	PARTS NAME	REMARKS	SUFFIX
	C 101	QFV41HJ-224	FILM CAPACITOR	.22MF 5% 50V	
	C 102	QFV81HJ-223	FILM CAPACITOR	.022MF 5% 50V	
	C 103	QEK41HM-225	E.CAPACITOR	2.2MF 20% 50V	
	C 104	QEK41CM-226	E.CAPACITOR	22MF 20% 16V	
	C 105	QCS11HJ-680	C.CAPACITOR	68PF 5% 50V	
	C 106	QCBB1HK-101Y	C.CAPACITOR	100PF 10% 50V	
	C 107	QCBB1HK-151Y	C.CAPACITOR	150PF 10% 50V	
	C 108	QEK61HM-475ZN	E.CAPACITOR	4.7MF 20% 50V	
	C 141	QCFB1HZ-104Y	C.CAPACITOR	.10MF +80:-20%	
	C 142	QCFB1HZ-104Y	C.CAPACITOR	.10MF +80:-20%	
	C 143	QCC11EM-104V	C.CAPACITOR	.10MF 20% 25V	
	C 144	QCC11EM-104V	C.CAPACITOR	.10MF 20% 25V	
	C 145	QEK41CM-106	E.CAPACITOR	10MF 20% 16V	
	C 146	QCBB1HK-102Y	C.CAPACITOR	1000PF 10% 50V	
	C 147	QEK41HM-474	E.CAPACITOR	.47MF 20% 50V	
	C 149	QEK41HM-104	E.CAPACITOR	.10MF 20% 50V	
	C 151	QFV41HJ-333	FILM CAPACITOR	.033MF 5% 50V	
	C 152	QFV41HJ-333	FILM CAPACITOR	.033MF 5% 50V	
	C 153	QCVB1CM-103Y	C.CAPACITOR	.010MF 20% 16V	
	C 154	QEK41CM-106	E.CAPACITOR	10MF 20% 16V	
	C 155	QCBB1HK-151Y	C.CAPACITOR	150PF 10% 50V	
	C 181	QEK41CM-476	E.CAPACITOR	47MF 20% 16V	
	C 184	QEK41HM-225	E.CAPACITOR	2.2MF 20% 50V	
	C 185	QCBB1HK-471Y	C.CAPACITOR	470PF 10% 50V	
	C 201	QFV41HJ-224	FILM CAPACITOR	.22MF 5% 50V	
	C 202	QFV81HJ-223	FILM CAPACITOR	.022MF 5% 50V	
	C 203	QEK41HM-225	E.CAPACITOR	2.2MF 20% 50V	
	C 204	QEK41CM-226	E.CAPACITOR	22MF 20% 16V	
	C 205	QCS11HJ-680	C.CAPACITOR	68PF 5% 50V	
	C 206	QCBB1HK-101Y	C.CAPACITOR	100PF 10% 50V	
	C 207	QCBB1HK-151Y	C.CAPACITOR	150PF 10% 50V	
	C 208	QEK61HM-475ZN	E.CAPACITOR	4.7MF 20% 50V	
	C 241	QCFB1HZ-104Y	C.CAPACITOR	.10MF +80:-20%	
	C 242	QCFB1HZ-104Y	C.CAPACITOR	.10MF +80:-20%	
	C 243	QCC11EM-104V	C.CAPACITOR	.10MF 20% 25V	
	C 244	QCC11EM-104V	C.CAPACITOR	.10MF 20% 25V	
	C 245	QEK41CM-106	E.CAPACITOR	10MF 20% 16V	
	C 246	QCBB1HK-102Y	C.CAPACITOR	1000PF 10% 50V	
	C 247	QEK41HM-474	E.CAPACITOR	.47MF 20% 50V	
	C 249	QEK41HM-104	E.CAPACITOR	.10MF 20% 50V	
	C 251	QFV41HJ-333	FILM CAPACITOR	.033MF 5% 50V	
	C 252	QFV41HJ-333	FILM CAPACITOR	.033MF 5% 50V	
	C 253	QCVB1CM-103Y	C.CAPACITOR	.010MF 20% 16V	
	C 254	QEK41CM-106	E.CAPACITOR	10MF 20% 16V	
	C 255	QCBB1HK-151Y	C.CAPACITOR	150PF 10% 50V	
	C 281	QEK41CM-476	E.CAPACITOR	47MF 20% 16V	
	C 284	QEK41HM-225	E.CAPACITOR	2.2MF 20% 50V	
	C 285	QCBB1HK-471Y	C.CAPACITOR	470PF 10% 50V	
⚠	C 301	QETB1EM-688N	E.CAPACITOR	6800MF 20% 25V	
	C 302	QEK41CM-106	E.CAPACITOR	10MF 20% 16V	
	C 303	QCBB1HK-221Y	C.CAPACITOR	220PF 10% 50V	
	C 304	QEK41HM-225	E.CAPACITOR	2.2MF 20% 50V	
	C 305	QEK41CM-226	E.CAPACITOR	22MF 20% 16V	
	C 306	QCC11EM-104V	C.CAPACITOR	.10MF 20% 25V	
	C 307	QEK41CM-106	E.CAPACITOR	10MF 20% 16V	

BLOCK NO. 04

⚠	REF.	PARTS NO.	PARTS NAME	REMARKS	SUFFIX
	C 308	QEK61AM-107ZM	E.CAPACITOR	100MF 20% 10V	
	C 310	QEK41HM-105	E.CAPACITOR	1.0MF 20% 50V	
	C 311	QEK41CM-226	E.CAPACITOR	22MF 20% 16V	
	C 312	QFV11HJ-393AZM	FILM CAPACITOR	.039MF 5% 50V	
	C 313	QFV11HJ-393AZM	FILM CAPACITOR	.039MF 5% 50V	
	C 314	QCC11EM-223V	C.CAPACITOR	.022MF 20% 25V	
	C 315	QCC11EM-223V	C.CAPACITOR	.022MF 20% 25V	
	C 341	QFV71HJ-394ZM	FILM CAPACITOR	.39MF 5% 50V	
	C 342	QEK41CM-106	E.CAPACITOR	10MF 20% 16V	
	C 343	QET41CM-227	E.CAPACITOR	220MF 20% 16V	
	C 344	QEK41CM-106	E.CAPACITOR	10MF 20% 16V	
	C 345	QEK61HM-475ZN	E.CAPACITOR	4.7MF 20% 50V	
	C 346	QEK61HM-475ZN	E.CAPACITOR	4.7MF 20% 50V	
	C 347	QEK41CM-226	E.CAPACITOR	22MF 20% 16V	
	C 348	QEK61AM-107ZM	E.CAPACITOR	100MF 20% 10V	
	C 349	QCBB1HK-151Y	C.CAPACITOR	150PF 10% 50V	
	C 350	QCBB1HK-151Y	C.CAPACITOR	150PF 10% 50V	
	C 351	QCBB1HK-102Y	C.CAPACITOR	1000PF 10% 50V	
	C 352	QETC1HM-224ZN	E.CAPACITOR	.22MF 20% 50V	
	C 353	QEK41CM-226	E.CAPACITOR	22MF 20% 16V	
	C 355	QEK41CM-226	E.CAPACITOR	22MF 20% 16V	
	C 356	QEK41EM-475	E.CAPACITOR	4.7MF 20% 25V	
	C 357	QEK51AM-107	E CAPACITOR	100MF 20% 10V	
	C 358	QCVB1CM-103Y	C.CAPACITOR	.010MF 20% 16V	
	C 359	QCBB1HK-102Y	C.CAPACITOR	1000PF 10% 50V	
	C 360	QCVB1CM-103Y	C.CAPACITOR	.010MF 20% 16V	
	C 361	QCBB1HK-102Y	C.CAPACITOR	1000PF 10% 50V	
	C 362	QCVB1CM-103Y	C.CAPACITOR	.010MF 20% 16V	
	C 363	QCVB1CM-103Y	C.CAPACITOR	.010MF 20% 16V	
	C 364	QCVB1CM-103Y	C.CAPACITOR	.010MF 20% 16V	
	C 382	QEK51AM-107	E CAPACITOR	100MF 20% 10V	
	C 383	QCVB1CM-103Y	C.CAPACITOR	.010MF 20% 16V	
	C 911	QFV71HJ-683ZM	FILM CAPACITOR	.068MF 5% 50V	
	C 912	QFV71HJ-683ZM	FILM CAPACITOR	.068MF 5% 50V	
	C 913	QFV71HJ-683ZM	FILM CAPACITOR	.068MF 5% 50V	
	C 914	QFV71HJ-683ZM	FILM CAPACITOR	.068MF 5% 50V	
	CN331	VMC0289-P06	CONNECTOR		
	CN332	VMC0289-P11	CONNECTOR		
	CN333	VMC0289-P08	CONNECTOR		
	CN334	VMC0289-P08	CONNECTOR		
	CN335	VMC0289-S08K	CONNECTOR		
	CN336	VMC0163-R06	CONNECTOR		
	CN337	VMC0163-R10	CONNECTOR		
	CN338	EMV7127-017	CONNECTOR		
	CN340	VMC0289-S11K	CONNECTOR		
	CN381	VMC0075-R05N	CONNECTOR		
⚠	CN901	EMV5137-002	CONNECTOR		
⚠	CN902	EMV5138-002	CONNECTOR		
	CN903	VMC0289-S06K	CONNECTOR		
	CN911	VMC0289-S08K	CONNECTOR		
	D 301	1SS133	SI DIODE		
	D 302	MTZ10JAT-77	ZENER DIODE		
	D 303	1SS133	SI DIODE		
	D 304	1SS133	SI DIODE		
	D 305	RB721Q	DIODE		

BLOCK NO. 04

⚠	REF.	PARTS NO.	PARTS NAME	REMARKS	SUFFIX
	D 306	RB721Q	DIODE		
	D 307	MTZ8.2JB	ZENER DIODE		
	D 341	1SS133	SI DIODE		
	D 343	1SS133	SI DIODE		
	D 346	1SS133	SI DIODE		
⚠	D 911	D5SBA20-4101	SI DIODE		
	D3741	SLR-325VCT31	LED		
	D3742	SLR-325MCT31	LED		
	D3743	SLR-325MCT31	LED		
	F.CLI	VMZ0125-001Z	FUSE CLIP		
⚠	IC331	UPC78L06J	IC		
	IC332	VC4580L	IC		
	IC333	BA15218N	IC		
	IC334	BH3854AFS	IC		
⚠	IC335	TA8220H	IC		
	IC336	LA4525	IC		
⚠	J 301	EMB90YV-401A	S.TERMIMAL		
	J 302	VMJ4026-001	HEADPHONE JACK		
⚠	J 901	QMC0263-004BS	AC SOCKET		
	K 301	VQZ0048-009	INDUCTOR		
	L 181	VQP0018-470	INDUCTOR		
	L 281	VQP0018-470	INDUCTOR		
	L 341	VQP0018-470	INDUCTOR		
	L 381	VQP0018-470	INDUCTOR		
	LF101	VQZ0104-003	INDUCTOR		
	LF201	VQZ0104-003	INDUCTOR		
⚠	LF901	VQZ0113-001	INDUCTOR		
	Q 101	2SC2001(L,K)	TRANSISTOR		
	Q 102	2SC2001(L,K)	TRANSISTOR		
	Q 103	2SK105(E,F,H)	TRANSISTOR(FET)		
	Q 141	2SD2144S(VW)	TRANSISTOR		
	Q 142	2SD2144S(VW)	TRANSISTOR		
	Q 201	2SC2001(L,K)	TRANSISTOR		
	Q 202	2SC2001(L,K)	TRANSISTOR		
	Q 203	2SK105(E,F,H)	TRANSISTOR(FET)		
	Q 241	2SD2144S(VW)	TRANSISTOR		
	Q 242	2SD2144S(VW)	TRANSISTOR		
	Q 301	2SA1175	TRANSISTOR		
	Q 302	DTC144TS	TRANSISTOR		
	Q 303	UN4110	TRANSISTOR		
⚠	Q 304	2SB1133(R,S)	TRANSISTOR		
	Q 305	2SC2785	TRANSISTOR		
	Q 306	2SC2785	TRANSISTOR		
	Q 307	2SC2785	TRANSISTOR		
	Q 341	DTA143ES	TRANSISTOR		
	Q 342	2SC2785	TRANSISTOR		
	Q 345	DTA143ES	TRANSISTOR		
	Q 346	2SC2785	TRANSISTOR		
	Q 347	2SC2785	TRANSISTOR		
	Q 348	2SA1175	TRANSISTOR		
	R 101	QRD161J-104	CARBON RESISTOR	100K 5% 1/6W	
	R 102	QRD161J-222	CARBON RESISTOR	2.2K 5% 1/6W	
	R 103	QRD161J-475	CARBON RESISTOR	4.7M 5% 1/6W	
	R 104	QRD161J-475	CARBON RESISTOR	4.7M 5% 1/6W	
	R 105	QRD161J-471	CARBON RESISTOR	470 5% 1/6W	

BLOCK NO. 04

⚠	REF.	PARTS NO.	PARTS NAME	REMARKS	SUFFIX
	R 106	QRD161J-102	CARBON RESISTOR	1.0K 5% 1/6W	
	R 107	QRD161J-472	CARBON RESISTOR	4.7K 5% 1/6W	
	R 108	QRD161J-681	CARBON RESISTOR	680 5% 1/6W	
	R 109	QRD161J-334	CARBON RESISTOR	330K 5% 1/6W	
	R 110	QRD161J-103	CARBON RESISTOR	10K 5% 1/6W	
	R 111	QRD161J-104	CARBON RESISTOR	100K 5% 1/6W	
	R 113	QRD161J-472	CARBON RESISTOR	4.7K 5% 1/6W	
	R 115	QRD161J-105	CARBON RESISTOR	1.0M 5% 1/6W	
	R 118	QRD161J-334	CARBON RESISTOR	330K 5% 1/6W	
	R 141	QRD167J-4R7	CARBON RESISTOR	4.7 5% 1/6W	
	R 142	QRD161J-2R2	CARBON RESISTOR	2.2 5% 1/6W	
	R 143	QRD161J-2R2	CARBON RESISTOR	2.2 5% 1/6W	
	R 144	QRD161J-122	CARBON RESISTOR	1.2K 5% 1/6W	
	R 145	QRD161J-331	CARBON RESISTOE	330 5% 1/6W	
	R 146	QRD161J-102	CARBON RESISTOR	1.0K 5% 1/6W	
	R 147	QRD161J-222	CARBON RESISTOR	2.2K 5% 1/6W	
	R 148	QRD161J-472	CARBON RESISTOR	4.7K 5% 1/6W	
	R 153	QRD161J-222	CARBON RESISTOR	2.2K 5% 1/6W	
	R 157	QRD161J-472	CARBON RESISTOR	4.7K 5% 1/6W	
	R 158	QRD161J-392	CARBON RESISTOR	3.9K 5% 1/6W	
	R 181	QRD161J-103	CARBON RESISTOR	10K 5% 1/6W	
	R 182	QRD161J-220	CARBON RESISTOR	22 5% 1/6W	
	R 186	QRD161J-152	CARBON RESISTOR	1.5K 5% 1/6W	
	R 187	QRD161J-223	CARBON RESISTOR	22K 5% 1/6W	
	R 201	QRD161J-104	CARBON RESISTOR	100K 5% 1/6W	
	R 202	QRD161J-222	CARBON RESISTOR	2.2K 5% 1/6W	
	R 203	QRD161J-475	CARBON RESISTOR	4.7M 5% 1/6W	
	R 204	QRD161J-475	CARBON RESISTOR	4.7M 5% 1/6W	
	R 205	QRD161J-471	CARBON RESISTOR	470 5% 1/6W	
	R 206	QRD161J-102	CARBON RESISTOR	1.0K 5% 1/6W	
	R 207	QRD161J-472	CARBON RESISTOR	4.7K 5% 1/6W	
	R 208	QRD161J-681	CARBON RESISTOR	680 5% 1/6W	
	R 209	QRD161J-334	CARBON RESISTOR	330K 5% 1/6W	
	R 210	QRD161J-103	CARBON RESISTOR	10K 5% 1/6W	
	R 211	QRD161J-104	CARBON RESISTOR	100K 5% 1/6W	
	R 213	QRD161J-472	CARBON RESISTOR	4.7K 5% 1/6W	
	R 215	QRD161J-105	CARBON RESISTOR	1.0M 5% 1/6W	
	R 218	QRD161J-334	CARBON RESISTOR	330K 5% 1/6W	
	R 241	QRD167J-4R7	CARBON RESISTOR	4.7 5% 1/6W	
	R 242	QRD161J-2R2	CARBON RESISTOR	2.2 5% 1/6W	
	R 243	QRD161J-2R2	CARBON RESISTOR	2.2 5% 1/6W	
	R 244	QRD161J-122	CARBON RESISTOR	1.2K 5% 1/6W	
	R 245	QRD161J-331	CARBON RESISTOE	330 5% 1/6W	
	R 246	QRD161J-102	CARBON RESISTOR	1.0K 5% 1/6W	
	R 247	QRD161J-222	CARBON RESISTOR	2.2K 5% 1/6W	
	R 248	QRD161J-472	CARBON RESISTOR	4.7K 5% 1/6W	
	R 253	QRD161J-222	CARBON RESISTOR	2.2K 5% 1/6W	
	R 257	QRD161J-472	CARBON RESISTOR	4.7K 5% 1/6W	
	R 258	QRD161J-392	CARBON RESISTOR	3.9K 5% 1/6W	
	R 281	QRD161J-103	CARBON RESISTOR	10K 5% 1/6W	
	R 282	QRD161J-220	CARBON RESISTOR	22 5% 1/6W	
	R 286	QRD161J-152	CARBON RESISTOR	1.5K 5% 1/6W	
	R 287	QRD161J-223	CARBON RESISTOR	22K 5% 1/6W	
	R 301	QRD161J-471	CARBON RESISTOR	470 5% 1/6W	
	R 302	QRD161J-182	CARBON RESISTOR	1.8K 5% 1/6W	

BLOCK NO. 04

⚠	REF.	PARTS NO.	PARTS NAME	REMARKS	SUFFIX
	R 303	QRD161J-3R3	CARBON RESISTOR	3.3 5% 1/6W	
	R 304	QRD161J-3R3	CARBON RESISTOR	3.3 5% 1/6W	
	R 305	QRD161J-3R3	CARBON RESISTOR	3.3 5% 1/6W	
	R 306	QRD161J-472	CARBON RESISTOR	4.7K 5% 1/6W	
	R 307	QRD167J-332	CARBON RESISTOR	3.3K 5% 1/6W	
	R 308	QRD161J-222	CARBON RESISTOR	2.2K 5% 1/6W	
	R 309	QRD161J-681	CARBON RESISTOR	680 5% 1/6W	
	R 310	QRD161J-681	CARBON RESISTOR	680 5% 1/6W	
	R 311	QRD161J-681	CARBON RESISTOR	680 5% 1/6W	
	R 312	QRD161J-471	CARBON RESISTOR	470 5% 1/6W	
	R 313	QRD161J-472	CARBON RESISTOR	4.7K 5% 1/6W	
	R 314	QRD161J-222	CARBON RESISTOR	2.2K 5% 1/6W	
	R 315	QRD161J-222	CARBON RESISTOR	2.2K 5% 1/6W	
	R 316	QRD161J-472	CARBON RESISTOR	4.7K 5% 1/6W	
	R 317	QRD161J-472	CARBON RESISTOR	4.7K 5% 1/6W	
	R 318	QRD167J-332	CARBON RESISTOR	3.3K 5% 1/6W	
	R 319	QRD167J-682	CARBON RESISTOR	6.8K 5% 1/6W	
	R 320	QRZ0077-4R7X	FUSE RESISTOR	4.7 1/0W	
	R 321	QRD161J-471	CARBON RESISTOR	470 5% 1/6W	
	R 323	QRD161J-223	CARBON RESISTOR	22K 5% 1/6W	
	R 324	QRD161J-473	CARBON RESISTOR	47K 5% 1/6W	
	R 325	QRD161J-393	CARBON RESISTOR	39K 5% 1/6W	
	R 326	QRD161J-475	CARBON RESISTOR	4.7M 5% 1/6W	
	R 327	QRD161J-681	CARBON RESISTOR	680 5% 1/6W	
	R 341	QRD161J-224	CARBON RESISTOR	220K 5% 1/6W	
	R 342	QRD161J-222	CARBON RESISTOR	2.2K 5% 1/6W	
	R 343	QRD161J-222	CARBON RESISTOR	2.2K 5% 1/6W	
	R 344	QRD161J-222	CARBON RESISTOR	2.2K 5% 1/6W	
	R 345	QRD161J-223	CARBON RESISTOR	22K 5% 1/6W	
	R 347	QRD161J-472	CARBON RESISTOR	4.7K 5% 1/6W	
	R 348	QRD161J-223	CARBON RESISTOR	22K 5% 1/6W	
	R 350	QRD161J-103	CARBON RESISTOR	10K 5% 1/6W	
	R 351	QRD161J-473	CARBON RESISTOR	47K 5% 1/6W	
	R 354	QRD161J-103	CARBON RESISTOR	10K 5% 1/6W	
	R 355	QRD161J-103	CARBON RESISTOR	10K 5% 1/6W	
	R 356	QRD161J-103	CARBON RESISTOR	10K 5% 1/6W	
	R 357	QRD161J-154	CARBON RESISTOR	150K 5% 1/6W	
	R 358	QRD161J-154	CARBON RESISTOR	150K 5% 1/6W	
	R 359	QRD161J-221	CARBON RESISTOR	220 5% 1/6W	
	R 360	QRD161J-221	CARBON RESISTOR	220 5% 1/6W	
	R 361	QRD161J-125	CARBON RESISTOR	1.2M 5% 1/6W	
	R 362	QRD161J-563	CARBON RESISTOR	56K 5% 1/6W	
	R 363	QRD161J-564	CARBON RESISTOR	560K 5% 1/6W	
	R 364	QRD161J-225	CARBON RESISTOR	2.2M 5% 1/6W	
	R 365	QRD161J-474	CARBON RESISTOR	470K 5% 1/6W	
	R 383	QRD161J-221	CARBON RESISTOR	220 5% 1/6W	
	R 384	QRD161J-221	CARBON RESISTOR	220 5% 1/6W	
	R3741	QRD161J-102	CARBON RESISTOR	1.0K 5% 1/6W	
	R3742	QRD161J-102	CARBON RESISTOR	1.0K 5% 1/6W	
	R3743	QRD161J-122	CARBON RESISTOR	1.2K 5% 1/6W	
	R3744	QRD161J-152	CARBON RESISTOR	1.5K 5% 1/6W	
	R3745	QRD161J-222	CARBON RESISTOR	2.2K 5% 1/6W	
	R3746	QRD161J-272	CARBON RESISTOR	2.7K 5% 1/6W	
	R3747	QRD161J-392	CARBON RESISTOR	3.9K 5% 1/6W	
	R3748	QRD167J-562	CARBON RESISTOR	5.6K 5% 1/6W	

BLOCK NO. 04

⚠	REF.	PARTS NO.	PARTS NAME	REMARKS	SUFFIX
	R3749	QRD161J-103	CARBON RESISTOR	10K 5% 1/6W	
	R3752	QRD161J-821	CARBON RESISTOR	820 5% 1/6W	
	R3753	QRD161J-821	CARBON RESISTOR	820 5% 1/6W	
	R3754	QRD161J-821	CARBON RESISTOR	820 5% 1/6W	
	S3701	QSQ1A11-V04Z	TACT SWITCH		
	S3702	QSQ1A11-V04Z	TACT SWITCH		
	S3703	QSQ1A11-V04Z	TACT SWITCH		
	S3704	QSQ1A11-V04Z	TACT SWITCH		
	S3705	QSQ1A11-V04Z	TACT SWITCH		
	S3706	QSQ1A11-V04Z	TACT SWITCH		
	S3707	QSQ1A11-V04Z	TACT SWITCH		
	S3708	QSQ1A11-V04Z	TACT SWITCH		
	S3709	QSQ1A11-V04Z	TACT SWITCH		

www.manualscenter.com

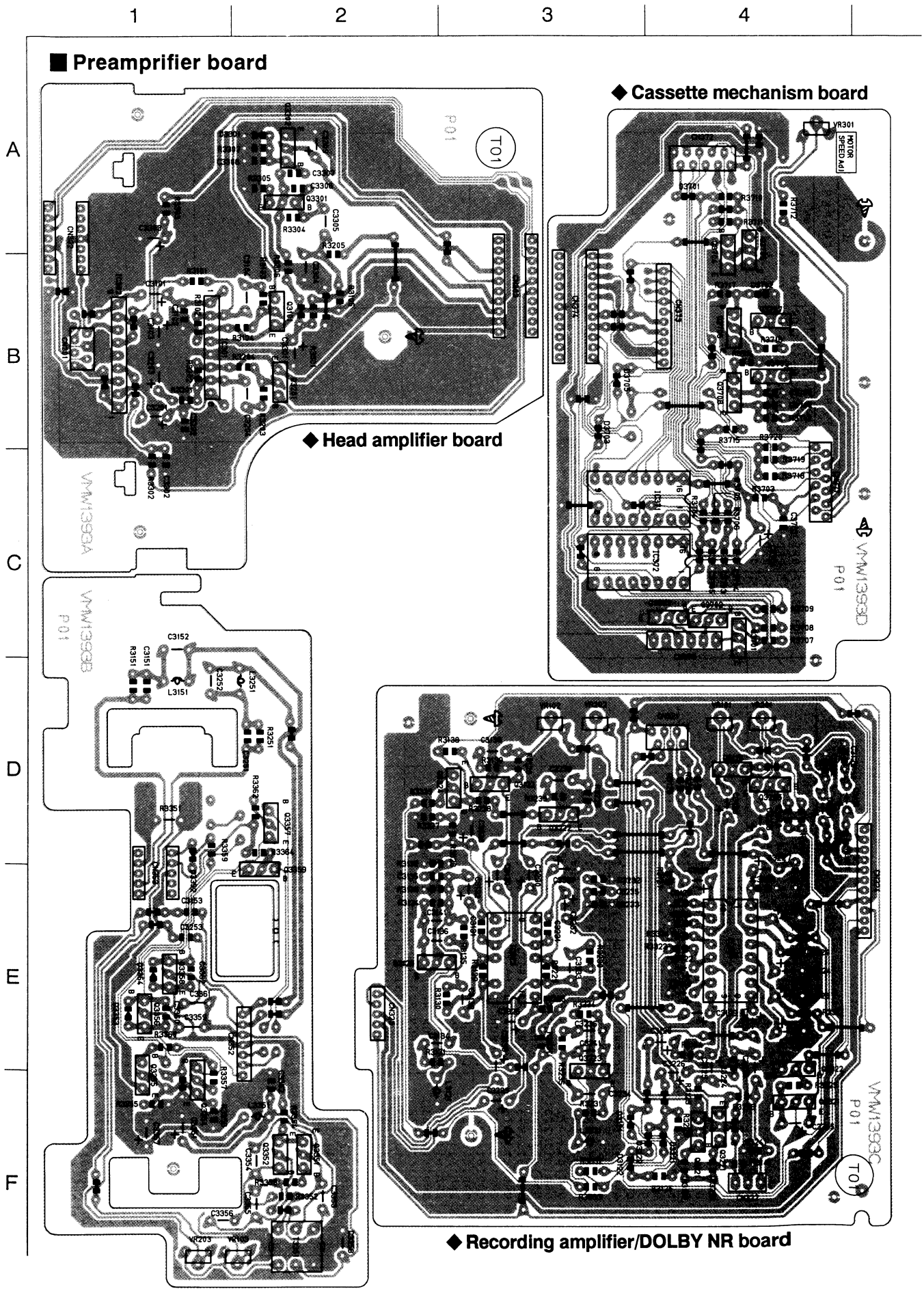

Fig. 9-4

www.manualscenter.com

● Pre-amprifier board parts list

BLOCK NO. 05

⚠	REF.	PARTS NO.	PARTS NAME	REMARKS	SUFFIX
	CN301	VMC0163-R06	CONNECTOR		
	CN302	VMC0289-S07	CONNECTOR		
	CN303	VMC0289-S10K	CONNECTOR		
	CN321	VMC0163-R06	CONNECTOR		
	CN322	VMC0041-003	CONNECTOR		
	CN323	VMC0289-P05	CONNECTOR		
	CN324	VMC0289-P11	CONNECTOR		
	CN352	VMC0289-P07	CONNECTOR		
	CN353	VMC0289-S05K	CONNECTOR		
	CN371	VMC0314-S12	CONNECTOR		
	CN372	VMC0163-R10	CONNECTOR		
	CN373	VMC0289-P10	CONNECTOR		
	CN374	VMC0289-S11K	CONNECTOR		
	CN375	VMC0041-006	CONNECTOR		
	C3101	QEK41HM-225	E.CAPACITOR	2.2MF 20% 50V	
	C3102	QCBB1HK-681Y	C.CAPACITOR	680PF 10% 50V	
	C3103	QEK51AM-107	E CAPACITOR	100MF 20% 10V	
	C3104	QFV41HJ-123ZM	FILM CAPACITOR	.012MF 5% 50V	
	C3105	QCBB1HK-221Y	C.CAPACITOR	220PF 10% 50V	
	C3121	QER61HM-335ZM	E.CAPACITOR	3.3MF 20% 50V	
	C3122	QCBB1HK-221Y	C.CAPACITOR	220PF 10% 50V	
	C3123	QER61HM-474ZM	E.CAPACITOR	.47MF 20% 50V	
	C3124	QCBB1HK-102Y	C.CAPACITOR	1000PF 10% 50V	
	C3125	QEK51HM-475	E CAPACITOR	4.7MF 20% 50V	
	C3126	QEK41HM-474	E.CAPACITOR	.47MF 20% 50V	
	C3127	QEK41HM-474	E.CAPACITOR	.47MF 20% 50V	
	C3128	QCBB1HK-471Y	C.CAPACITOR	470PF 10% 50V	
	C3129	QEK41HM-225	E.CAPACITOR	2.2MF 20% 50V	
	C3130	QEK41HM-105	E.CAPACITOR	1.0MF 20% 50V	
	C3131	QCBB1HK-102Y	C.CAPACITOR	1000PF 10% 50V	
	C3132	QEK51HM-475	E CAPACITOR	4.7MF 20% 50V	
	C3133	QCC11EM-104V	C.CAPACITOR	.10MF 20% 25V	
	C3134	QFV81HJ-223	FILM CAPACITOR	.022MF 5% 50V	
	C3135	QCXB1CM-222Y	C.CAPACITOR	2200PF 20% 16V	
	C3136	QFV41HJ-333	FILM CAPACITOR	.033MF 5% 50V	
	C3138	QFV81HJ-183	FILM CAPACITOR	.018MF 5% 50V	
	C3139	QER41HM-105VM	E.CAPACITOR	1.0MF 20% 50V	
	C3140	QEK41HM-224	E.CAPACITOR	.22MF 20% 50V	
	C3141	QFV41HJ-123ZM	FILM CAPACITOR	.012MF 5% 50V	
	C3151	QCBB1HK-102Y	C.CAPACITOR	1000PF 10% 50V	
	C3152	QCS11HJ-271	C.CAPACITOR	270PF 5% 50V	
	C3153	QCBB1HK-331Y	C.CAPACITOR	330PF 10% 50V	
	C3201	QEK41HM-225	E.CAPACITOR	2.2MF 20% 50V	
	C3202	QCBB1HK-681Y	C.CAPACITOR	680PF 10% 50V	
	C3203	QEK51AM-107	E CAPACITOR	100MF 20% 10V	
	C3204	QFV41HJ-123ZM	FILM CAPACITOR	.012MF 5% 50V	
	C3205	QCBB1HK-221Y	C.CAPACITOR	220PF 10% 50V	
	C3221	QER61HM-335ZM	E.CAPACITOR	3.3MF 20% 50V	
	C3222	QCBB1HK-221Y	C.CAPACITOR	220PF 10% 50V	
	C3223	QER61HM-474ZM	E.CAPACITOR	.47MF 20% 50V	
	C3224	QCBB1HK-102Y	C.CAPACITOR	1000PF 10% 50V	
	C3225	QEK51HM-475	E CAPACITOR	4.7MF 20% 50V	
	C3226	QEK41HM-474	E.CAPACITOR	.47MF 20% 50V	
	C3227	QEK41HM-474	E.CAPACITOR	.47MF 20% 50V	
	C3228	QCBB1HK-471Y	C.CAPACITOR	470PF 10% 50V	

BLOCK NO. 05

⚠	REF.	PARTS NO.	PARTS NAME	REMARKS	SUFFIX
	C3229	QEK41HM-225	E.CAPACITOR	2.2MF 20% 50V	
	C3230	QEK41HM-105	E.CAPACITOR	1.0MF 20% 50V	
	C3231	QCBB1HK-102Y	C.CAPACITOR	1000PF 10% 50V	
	C3232	QEK51HM-475	E CAPACITOR	4.7MF 20% 50V	
	C3233	QCC11EM-104V	C.CAPACITOR	.10MF 20% 25V	
	C3234	QFV81HJ-223	FILM CAPACITOR	.022MF 5% 50V	
	C3235	QCXB1CM-222Y	C.CAPACITOR	2200PF 20% 16V	
	C3236	QFV41HJ-333	FILM CAPACITOR	.033MF 5% 50V	
	C3238	QFV81HJ-183	FILM CAPACITOR	.018MF 5% 50V	
	C3239	QER41HM-105VM	E.CAPACITOR	1.0MF 20% 50V	
	C3240	QEK41HM-224	E.CAPACITOR	.22MF 20% 50V	
	C3241	QFV41HJ-123ZM	FILM CAPACITOR	.012MF 5% 50V	
	C3251	QCBB1HK-102Y	C.CAPACITOR	1000PF 10% 50V	
	C3252	QCS11HJ-271	C.CAPACITOR	270PF 5% 50V	
	C3253	QCBB1HK-331Y	C.CAPACITOR	330PF 10% 50V	
	C3301	QEK41CM-226	E.CAPACITOR	22MF 20% 16V	
	C3302	QCVB1CM-103Y	C.CAPACITOR	.010MF 20% 16V	
	C3303	QEK41CM-226	E.CAPACITOR	22MF 20% 16V	
	C3304	QFV71HJ-103	FILM CAPACITOR	.010MF 5% 50V	
	C3305	QFV41HJ-153ZM	FILM CAPACITOR	.015MF 5% 50V	
	C3306	QCS11HJ-330	C.CAPACITOR	33PF 5% 50V	
	C3307	QCXB1CM-182Y	C.CAPACITOR	1800PF 20% 16V	
	C3308	QCBB1HK-681Y	C.CAPACITOR	680PF 10% 50V	
	C3309	QEK41HM-105	E.CAPACITOR	1.0MF 20% 50V	
	C3321	QEK41CM-226	E.CAPACITOR	22MF 20% 16V	
	C3322	QEK41CM-106	E.CAPACITOR	10MF 20% 16V	
	C3323	QEK41CM-106	E.CAPACITOR	10MF 20% 16V	
	C3324	QEK41HM-225	E.CAPACITOR	2.2MF 20% 50V	
	C3325	QEK41HM-105	E.CAPACITOR	1.0MF 20% 50V	
	C3326	QEK41CM-226	E.CAPACITOR	22MF 20% 16V	
	C3327	QEK61AM-107ZM	E.CAPACITOR	100MF 20% 10V	
	C3328	QEK41CM-106	E.CAPACITOR	10MF 20% 16V	
	C3351	QEK41CM-476	E.CAPACITOR	47MF 20% 16V	
	C3352	QCVB1CM-103Y	C.CAPACITOR	.010MF 20% 16V	
	C3353	QFN41HJ-682	M CAPACITOR	6800PF 5% 50V	
	C3354	QFN81HJ-562	M.CAPACITOR	5600PF 5% 50V	
	C3355	QFN81HJ-562	M.CAPACITOR	5600PF 5% 50V	
	C3356	QFN41HJ-682	M CAPACITOR	6800PF 5% 50V	
	C3357	QEK41CM-476	E.CAPACITOR	47MF 20% 16V	
	C3358	QFP32AJ-153ZM	PP.CAPACITOR	.015MF 5% 100V	
	C3359	QFN81HJ-152	M.CAPACITOR	1500PF 5% 50V	
	C3360	QCVB1CM-103Y	C.CAPACITOR	.010MF 20% 16V	
	C3361	QFN41HJ-332	M CAPACITOR	3300PF 5% 50V	
	C3362	QCVB1CM-103Y	C.CAPACITOR	.010MF 20% 16V	
	C3701	QEK41CM-476	E.CAPACITOR	47MF 20% 16V	
	C3702	QCVB1CM-103Y	C.CAPACITOR	.010MF 20% 16V	
	C3703	QCBB1HK-151Y	C.CAPACITOR	150PF 10% 50V	
	C3704	QCBB1HK-151Y	C.CAPACITOR	150PF 10% 50V	
	C3705	QCBB1HK-471Y	C.CAPACITOR	470PF 10% 50V	
	C3706	QCVB1CM-103Y	C.CAPACITOR	.010MF 20% 16V	
	D3121	1SS133	SI DIODE		
	D3122	1SS133	SI DIODE		
	D3221	1SS133	SI DIODE		
	D3222	1SS133	SI DIODE		
	D3301	1SS133	SI DIODE		

BLOCK NO. 05

⚠	REF.	PARTS NO.	PARTS NAME	REMARKS	SUFFIX
	D3352	1SS133	SI DIODE		
	D3353	1SS133	SI DIODE		
	D3354	1SS133	SI DIODE		
	D3701	1SS133	SI DIODE		
	D3702	1SS133	SI DIODE		
	D3703	1SS133	SI DIODE		
	D3704	MTZ5.6JB	ZENER DIODE		
	D3705	1SS133	SI DIODE		
	IC301	UPC1228HA	IC		
	IC302	UPC1330HA	IC		
	IC321	HA12134A	IC		
	IC322	LA3220	IC		
	IC371	MC14094BCP	IC		
	IC372	MC14094BCP	IC		
	L3121	VQP0001-562ZS	INDUCTOR		
	L3151	VQP0001-103S	INDUCTOR	AC NL	
	L3221	VQP0001-562ZS	INDUCTOR		
	L3251	VQP0001-103S	INDUCTOR	AC NL	
	L3351	VQP0028-100Z	INDUCTOR		
	Q3101	DTC144TS	TRANSISTOR		
	Q3121	2SC2785	TRANSISTOR		
	Q3122	2SC2785	TRANSISTOR		
	Q3123	DTC144TS	TRANSISTOR		
	Q3125	2SC2785	TRANSISTOR		
	Q3201	DTC144TS	TRANSISTOR		
	Q3221	2SC2785	TRANSISTOR		
	Q3222	2SC2785	TRANSISTOR		
	Q3223	DTC144TS	TRANSISTOR		
	Q3225	2SC2785	TRANSISTOR		
	Q3301	2SC2785	TRANSISTOR		
	Q3302	2SC2785	TRANSISTOR		
	Q3321	DTA144ES	TRANSISTOR		
	Q3322	DTC144ES	TRANSISTOR		
	Q3324	DTC144TS	TRANSISTOR		
	Q3351	2SC2001(L,K)	TRANSISTOR		
	Q3352	2SC2001(L,K)	TRANSISTOR		
	Q3354	2SC2785	TRANSISTOR		
	Q3355	2SC2001(L,K)	TRANSISTOR		
	Q3356	2SC1845	TRANSISTOR		
	Q3357	2SC2785	TRANSISTOR		
	Q3358	2SC1845	TRANSISTOR		
	Q3359	2SC2785	TRANSISTOR		
	Q3701	2SC2785	TRANSISTOR		
	Q3702	2SC2785	TRANSISTOR		
	Q3703	2SC2785	TRANSISTOR		
	Q3704	DTC144WSTP	TRANSISTOR		
	Q3705	DTC144TS	TRANSISTOR		
	Q3706	DTC114ESTP	TRANSISTOR		
	Q3707	2SA952(L,K)	TRANSISTOR		
	Q3708	2SC2785	TRANSISTOR		
	Q3709	2SB562(C)	TRANSISTOR		
	R3101	QRD161J-680	CARBON RESISTOR	68 5% 1/6W	
	R3102	QRD161J-274	CARBON RESISTOR	270K 5% 1/6W	
	R3103	QRD161J-622	CARBON RESISTOR	6.2K 5% 1/6W	
	R3104	QRD161J-472	CARBON RESISTOR	4.7K 5% 1/6W	

BLOCK NO. 05

⚠	REF.	PARTS NO.	PARTS NAME	REMARKS	SUFFIX
	R3105	QRD161J-122	CARBON RESISTOR	1.2K 5% 1/6W	
	R3121	QRD161J-103	CARBON RESISTOR	10K 5% 1/6W	
	R3122	QRD167J-332	CARBON RESISTOR	3.3K 5% 1/6W	
	R3123	QRD167J-332	CARBON RESISTOR	3.3K 5% 1/6W	
	R3124	QRD161J-102	CARBON RESISTOR	1.0K 5% 1/6W	
	R3125	QRD161J-104	CARBON RESISTOR	100K 5% 1/6W	
	R3126	QRD161J-683	CARBON RESISTOR	68K 5% 1/6W	
	R3127	QRD167J-332	CARBON RESISTOR	3.3K 5% 1/6W	
	R3128	QRD161J-103	CARBON RESISTOR	10K 5% 1/6W	
	R3129	QRD161J-153	CARBON RESISTOR	15K 5% 1/6W	
	R3130	QRD161J-153	CARBON RESISTOR	15K 5% 1/6W	
	R3131	QRD161J-101	CARBON RESISTOR	100 5% 1/6W	
	R3132	QRD161J-221	CARBON RESISTOR	220 5% 1/6W	
	R3133	QRD161J-182	CARBON RESISTOR	1.8K 5% 1/6W	
	R3134	QRD167J-332	CARBON RESISTOR	3.3K 5% 1/6W	
	R3135	QRD167J-332	CARBON RESISTOR	3.3K 5% 1/6W	
	R3138	QRD161J-472	CARBON RESISTOR	4.7K 5% 1/6W	
	R3139	QRD167J-332	CARBON RESISTOR	3.3K 5% 1/6W	
	R3140	QRD167J-332	CARBON RESISTOR	3.3K 5% 1/6W	
	R3141	QRD167J-332	CARBON RESISTOR	3.3K 5% 1/6W	
	R3151	QRD161J-103	CARBON RESISTOR	10K 5% 1/6W	
	R3201	QRD161J-680	CARBON RESISTOR	68 5% 1/6W	
	R3202	QRD161J-274	CARBON RESISTOR	270K 5% 1/6W	
	R3203	QRD161J-622	CARBON RESISTOR	6.2K 5% 1/6W	
	R3204	QRD161J-472	CARBON RESISTOR	4.7K 5% 1/6W	
	R3205	QRD161J-122	CARBON RESISTOR	1.2K 5% 1/6W	
	R3221	QRD161J-103	CARBON RESISTOR	10K 5% 1/6W	
	R3222	QRD167J-332	CARBON RESISTOR	3.3K 5% 1/6W	
	R3223	QRD167J-332	CARBON RESISTOR	3.3K 5% 1/6W	
	R3224	QRD161J-102	CARBON RESISTOR	1.0K 5% 1/6W	
	R3225	QRD161J-104	CARBON RESISTOR	100K 5% 1/6W	
	R3226	QRD161J-683	CARBON RESISTOR	68K 5% 1/6W	
	R3227	QRD167J-332	CARBON RESISTOR	3.3K 5% 1/6W	
	R3228	QRD161J-103	CARBON RESISTOR	10K 5% 1/6W	
	R3229	QRD161J-153	CARBON RESISTOR	15K 5% 1/6W	
	R3230	QRD161J-153	CARBON RESISTOR	15K 5% 1/6W	
	R3231	QRD161J-101	CARBON RESISTOR	100 5% 1/6W	
	R3232	QRD161J-221	CARBON RESISTOR	220 5% 1/6W	
	R3233	QRD161J-182	CARBON RESISTOR	1.8K 5% 1/6W	
	R3234	QRD167J-332	CARBON RESISTOR	3.3K 5% 1/6W	
	R3235	QRD167J-332	CARBON RESISTOR	3.3K 5% 1/6W	
	R3238	QRD161J-472	CARBON RESISTOR	4.7K 5% 1/6W	
	R3239	QRD167J-332	CARBON RESISTOR	3.3K 5% 1/6W	
	R3240	QRD167J-332	CARBON RESISTOR	3.3K 5% 1/6W	
	R3241	QRD167J-332	CARBON RESISTOR	3.3K 5% 1/6W	
	R3251	QRD161J-103	CARBON RESISTOR	10K 5% 1/6W	
	R3301	QRD161J-221	CARBON RESISTOR	220 5% 1/6W	
	R3302	QRD161J-103	CARBON RESISTOR	10K 5% 1/6W	
	R3303	QRD161J-221	CARBON RESISTOR	220 5% 1/6W	
	R3304	QRD161J-225	CARBON RESISTOR	2.2M 5% 1/6W	
	R3305	QRD161J-121	CARBON RESISTOR	120 5% 1/6W	
	R3306	QRD161J-473	CARBON RESISTOR	47K 5% 1/6W	
	R3307	QRD161J-104	CARBON RESISTOR	100K 5% 1/6W	
	R3321	QRD161J-103	CARBON RESISTOR	10K 5% 1/6W	
	R3322	QRD161J-221	CARBON RESISTOR	220 5% 1/6W	

www.manualscenter.com

BLOCK NO. 05

⚠	REF.	PARTS NO.	PARTS NAME	REMARKS	SUFFIX
	R3323	QRD161J-103	CARBON RESISTOR	10K 5% 1/6W	
	R3324	QRD161J-183	CARBON RESISTOR	18K 5% 1/6W	
	R3325	QRD161J-223	CARBON RESISTOR	22K 5% 1/6W	
	R3326	QRD161J-221	CARBON RESISTOR	220 5% 1/6W	
	R3327	QRD161J-475	CARBON RESISTOR	4.7M 5% 1/6W	
	R3328	QRD161J-475	CARBON RESISTOR	4.7M 5% 1/6W	
	R3329	QRD161J-101	CARBON RESISTOR	100 5% 1/6W	
	R3331	QRD161J-103	CARBON RESISTOR	10K 5% 1/6W	
	R3332	QRD161J-222	CARBON RESISTOR	2.2K 5% 1/6W	
	R3333	QRD161J-151	CARBON RESISTOR	150 5% 1/6W	
	R3351	QRZ0077-150X	F RESISTOR	15 1/0W	
	R3352	QRD161J-273	CARBON RESISTOR	27K 5% 1/6W	
	R3353	QRD161J-273	CARBON RESISTOR	27K 5% 1/6W	
	R3354	QRD161J-3R3	CARBON RESISTOR	3.3 5% 1/6W	
	R3355	QRD161J-181	CARBON RESISTOR	180 5% 1/6W	
	R3356	QRD161J-181	CARBON RESISTOR	180 5% 1/6W	
	R3357	QRD161J-101	CARBON RESISTOR	100 5% 1/6W	
	R3359	QRD161J-472	CARBON RESISTOR	4.7K 5% 1/6W	
	R3360	QRD161J-472	CARBON RESISTOR	4.7K 5% 1/6W	
	R3361	QRD161J-223	CARBON RESISTOR	22K 5% 1/6W	
	R3362	QRD161J-152	CARBON RESISTOR	1.5K 5% 1/6W	
	R3363	QRD161J-223	CARBON RESISTOR	22K 5% 1/6W	
	R3364	QRD161J-152	CARBON RESISTOR	1.5K 5% 1/6W	
	R3703	QRD161J-221	CARBON RESISTOR	220 5% 1/6W	
	R3704	QRD161J-222	CARBON RESISTOR	2.2K 5% 1/6W	
	R3705	QRD161J-222	CARBON RESISTOR	2.2K 5% 1/6W	
	R3706	QRD161J-222	CARBON RESISTOR	2.2K 5% 1/6W	
	R3707	QRD161J-223	CARBON RESISTOR	22K 5% 1/6W	
	R3708	QRD161J-223	CARBON RESISTOR	22K 5% 1/6W	
	R3709	QRD161J-223	CARBON RESISTOR	22K 5% 1/6W	
	R3710	QRD161J-473	CARBON RESISTOR	47K 5% 1/6W	
	R3711	QRD161J-473	CARBON RESISTOR	47K 5% 1/6W	
	R3712	QRD161J-123	CARBON RESISTOR	12K 5% 1/6W	
	R3713	QRD161J-151	CARBON RESISTOR	150 5% 1/6W	
	R3714	QRD167J-562	CARBON RESISTOR	5.6K 5% 1/6W	
	R3715	QRD167J-682	CARBON RESISTOR	6.8K 5% 1/6W	
	R3716	QRD161J-222	CARBON RESISTOR	2.2K 5% 1/6W	
	R3717	QRD161J-103	CARBON RESISTOR	10K 5% 1/6W	
	R3718	QRD161J-472	CARBON RESISTOR	4.7K 5% 1/6W	
	R3719	QRD167J-332	CARBON RESISTOR	3.3K 5% 1/6W	
	R3720	QRD161J-104	CARBON RESISTOR	100K 5% 1/6W	
	T3351	VQH1008-055	OSC COIL(BIAS)		
	VR101	QVPA603-502AZM	SEMI.V.RESISTOR		
	VR102	QVPA603-502AZM	SEMI.V.RESISTOR		
	VR103	QVPA603-503A	SEMI.V.RESISTOR		
	VR201	QVPA603-502AZM	SEMI.V.RESISTOR		
	VR202	QVPA603-502AZM	SEMI.V.RESISTOR		
	VR203	QVPA603-503A	SEMI.V.RESISTOR		
	VR301	QVPA603-103M	SEMI.V.RESISTOR		

1 2 3 4

A B C D E F

■ CD amprifier board

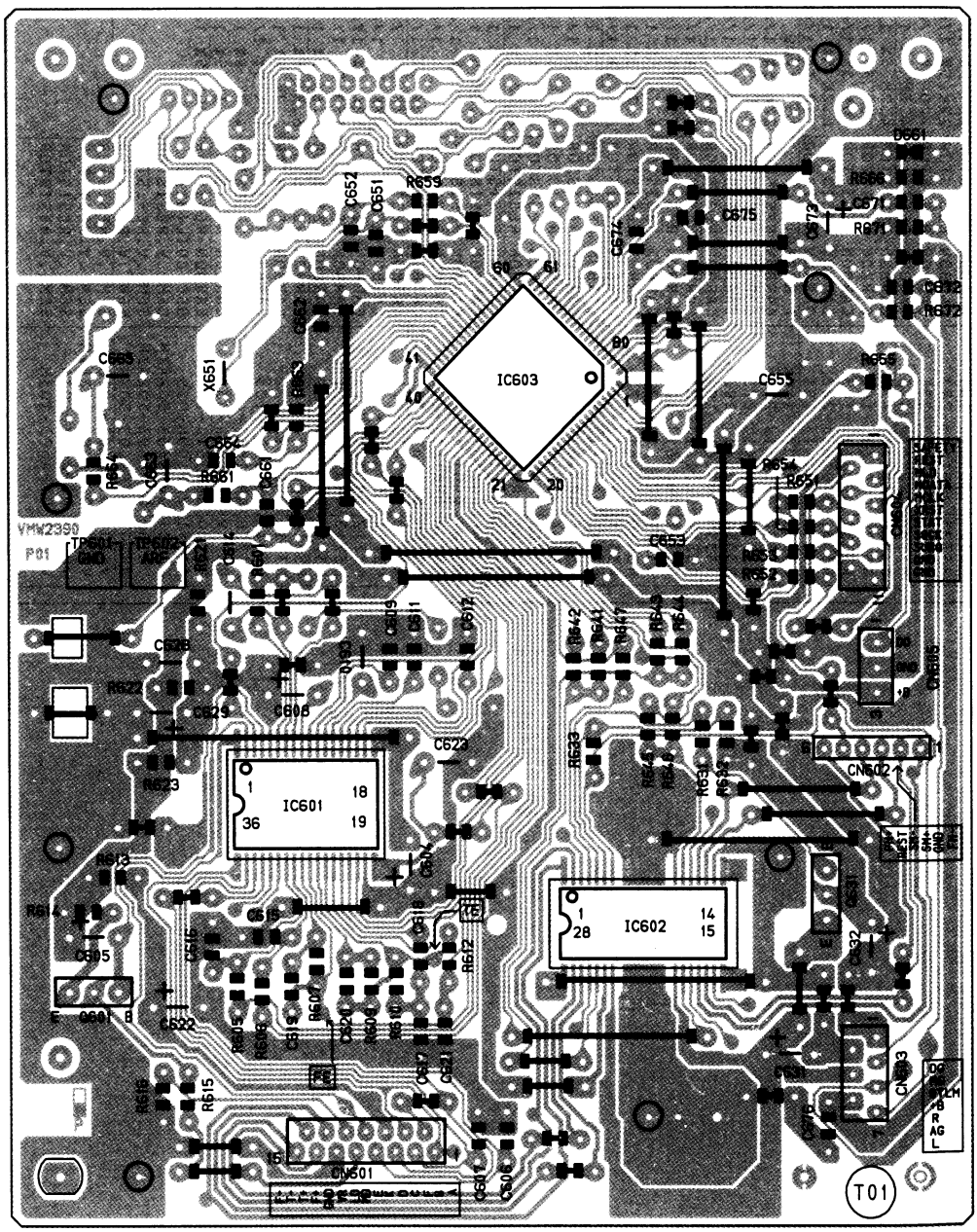

www.manualscenter.com

Fig. 9-5

● CD amplifier board parts list

BLOCK NO. 06

⚠	REF.	PARTS NO.	PARTS NAME	REMARKS	SUFFIX
	C 604	QEK61AM-107Z	E.CAPACITOR	100MF 20% 10V	
	C 605	QET41EM-106	E.CAPACITOR	10MF 20% 25V	
	C 606	QCBB1HK-102Y	C.CAPACITOR	1000PF 10% 50V	
	C 607	QCBB1HK-102Y	C.CAPACITOR	1000PF 10% 50V	
	C 608	QET41HM-105	E.CAPACITOR	1.0MF 20% 50V	
	C 609	QCBB1HK-101Y	C.CAPACITOR	100PF 10% 50V	
	C 610	QFLC1HJ-273ZM	M.CAPACITOR	.027MF 5% 50V	
	C 611	QCXB1CM-222Y	C.CAPACITOR	2200PF 20% 16V	
	C 612	QCXB1CM-332Y	C.CAPACITOR	3300PF 20% 16V	
	C 614	QFLC1HJ-104ZM	M.CAPACITOR	.10MF 5% 50V	
	C 615	QCHB1EZ-223	C.CAPACITOR	.022MF +80:-20%	
	C 616	QCHB1EZ-223	C.CAPACITOR	.022MF +80:-20%	
	C 617	QCHB1EZ-223	C.CAPACITOR	.022MF +80:-20%	
	C 618	QCXB1CM-222Y	C.CAPACITOR	2200PF 20% 16V	
	C 619	QCBB1HK-271Y	C.CAPACITOR	270PF 10% 50V	
	C 620	QCS11HJ-470	C.CAPACITOR	47PF 5% 50V	
	C 621	QCBB1HK-821Y	C.CAPACITOR	820PF 10% 50V	
	C 622	QET41AM-476	E.CAPACITOR	47MF 20% 10V	
	C 623	QFLC1HJ-104ZM	M.CAPACITOR	.10MF 5% 50V	
	C 628	QCC11EM-473V	C.CAPA. I.M	.047MF 20% 25V	
	C 629	QET41AM-107	E.CAPACITOR	100MF 20% 10V	
	C 631	QET41AM-477	E.CAPACITOR	470MF 20% 10V	
	C 632	QET41AM-107	E.CAPACITOR	100MF 20% 10V	
	C 651	QCS11HJ-120	C.CAPACITOR	12PF 5% 50V	
	C 652	QCS11HJ-150	C.CAPACITOR	15PF 5% 50V	
	C 653	QCHB1EZ-223	C.CAPACITOR	.022MF +80:-20%	
	C 655	QCC11EM-473V	C.CAPA. I.M	.047MF 20% 25V	
	C 661	QCBB1HK-471Y	C.CAPACITOR	470PF 10% 50V	
	C 662	QCHB1EZ-223	C.CAPACITOR	.022MF +80:-20%	
	C 663	QFLC1HJ-223ZM	M.CAPACITOR	.022MF 5% 50V	
	C 664	QCHB1EZ-223	C.CAPACITOR	.022MF +80:-20%	
	C 665	QFV71HJ-334ZM	FILM CAPACITOR	.33MF 5% 50V	
	C 671	QCXB1CM-222Y	C.CAPACITOR	2200PF 20% 16V	
	C 672	QCXB1CM-222Y	C.CAPACITOR	2200PF 20% 16V	
	C 673	QET41AM-227	E.CAPACITOR	220MF 20% 10V	
	C 674	QCHB1EZ-223	C.CAPACITOR	.022MF +80:-20%	
	C 675	QCBB1HK-102Y	C.CAPACITOR	1000PF 10% 50V	
	C 676	QCBB1HK-102Y	C.CAPACITOR	1000PF 10% 50V	
	CN601	EMV7144-015R	15PIN CONNECTOR	TO RF	
	CN602	EMV5109-006A	6P PLUG ASSY	TO MOTOR	
	CN603	VMC0163-R07	CONNECTOR	TO AUDIO	
	CN604	VMC0163-R11	CONNECTOR	TO MICON	
	CN605	VMC0041-003	CONNECTOR	TO DIGITAL OUT	
	D 661	1SS133	SI DIODE		
	IC601	AN8806SB	IC	RF AMP	
⚠	IC602	BA6398FP	IC	DRIVER	
	IC603	MN35510	IC	1CHIP PROCESSER	
	Q 601	2SA952(L,K)	TRANSISTOR		
⚠	Q 631	2SA952(L,K)	TRANSISTOR		
	R 601	QRD161J-123	CARBON RESISTOR	12K 5% 1/6W	
	R 605	QRD167J-134	CARBON RESISTOR	130K 5% 1/6W	
	R 606	QRD161J-913	CARBON RESISTOR	91K 5% 1/6W	
	R 607	QRD161J-273	CARBON RESISTOR	27K 5% 1/6W	
	R 609	QRD161J-114	CARBON RESISTOR	110K 5% 1/6W	
	R 610	QRD161J-154	CARBON RESISTOR	150K 5% 1/6W	

BLOCK NO. 06

⚠	REF.	PARTS NO.	PARTS NAME	REMARKS	SUFFIX
	R 612	QRD161J-103	CARBON RESISTOR	10K 5% 1/6W	
	R 613	QRD161J-121	CARBON RESISTOR	120 5% 1/6W	
	R 614	QRD161J-100	CARBON RESISTOR	10 5% 1/6W	
	R 615	QRD161J-120	CARBON RESISTOR	12 5% 1/6W	
	R 616	QRD161J-910Y	CARBON RESISTOR	91 5% 1/6W	
	R 621	QRD161J-680	CARBON RESISTOR	68 5% 1/6W	
	R 622	QRD161J-680	CARBON RESISTOR	68 5% 1/6W	
	R 623	QRD161J-680	CARBON RESISTOR	68 5% 1/6W	
	R 631	QRD161J-331	CARBON RESISTOE	330 5% 1/6W	
	R 632	QRD161J-101	CARBON RESISTOR	100 5% 1/6W	
	R 633	QRD161J-273	CARBON RESISTOR	27K 5% 1/6W	
	R 641	QRD161J-563	CARBON RESISTOR	56K 5% 1/6W	
	R 642	QRD161J-123	CARBON RESISTOR	12K 5% 1/6W	
	R 643	QRD161J-822	CARBON RESISTOR	8.2K 5% 1/6W	
	R 644	QRD161J-223	CARBON RESISTOR	22K 5% 1/6W	
	R 645	QRD161J-223	CARBON RESISTOR	22K 5% 1/6W	
	R 646	QRD161J-182	CARBON RESISTOR	1.8K 5% 1/6W	
	R 647	QRD167J-562	CARBON RESISTOR	5.6K 5% 1/6W	
	R 651	QRD161J-102	CARBON RESISTOR	1.0K 5% 1/6W	
	R 652	QRD161J-102	CARBON RESISTOR	1.0K 5% 1/6W	
	R 653	QRD161J-102	CARBON RESISTOR	1.0K 5% 1/6W	
	R 654	QRD161J-102	CARBON RESISTOR	1.0K 5% 1/6W	
	R 655	QRD161J-471	CARBON RESISTOR	470 5% 1/6W	
	R 659	QRD161J-471	CARBON RESISTOR	470 5% 1/6W	
	R 661	QRD161J-104	CARBON RESISTOR	100K 5% 1/6W	
	R 663	QRD161J-124	CARBON RESISTOR	120K 5% 1/6W	
	R 664	QRD161J-681	CARBON RESISTOR	680 5% 1/6W	
	R 666	QRD161J-220	CARBON RESISTOR	22 5% 1/6W	
	R 671	QRD161J-102	CARBON RESISTOR	1.0K 5% 1/6W	
	R 672	QRD161J-102	CARBON RESISTOR	1.0K 5% 1/6W	
	X 651	VCX5016-934V	CRYSTAL	16.9344MHZ	

1 2 3 4

A B C D E F

■ Tuner board

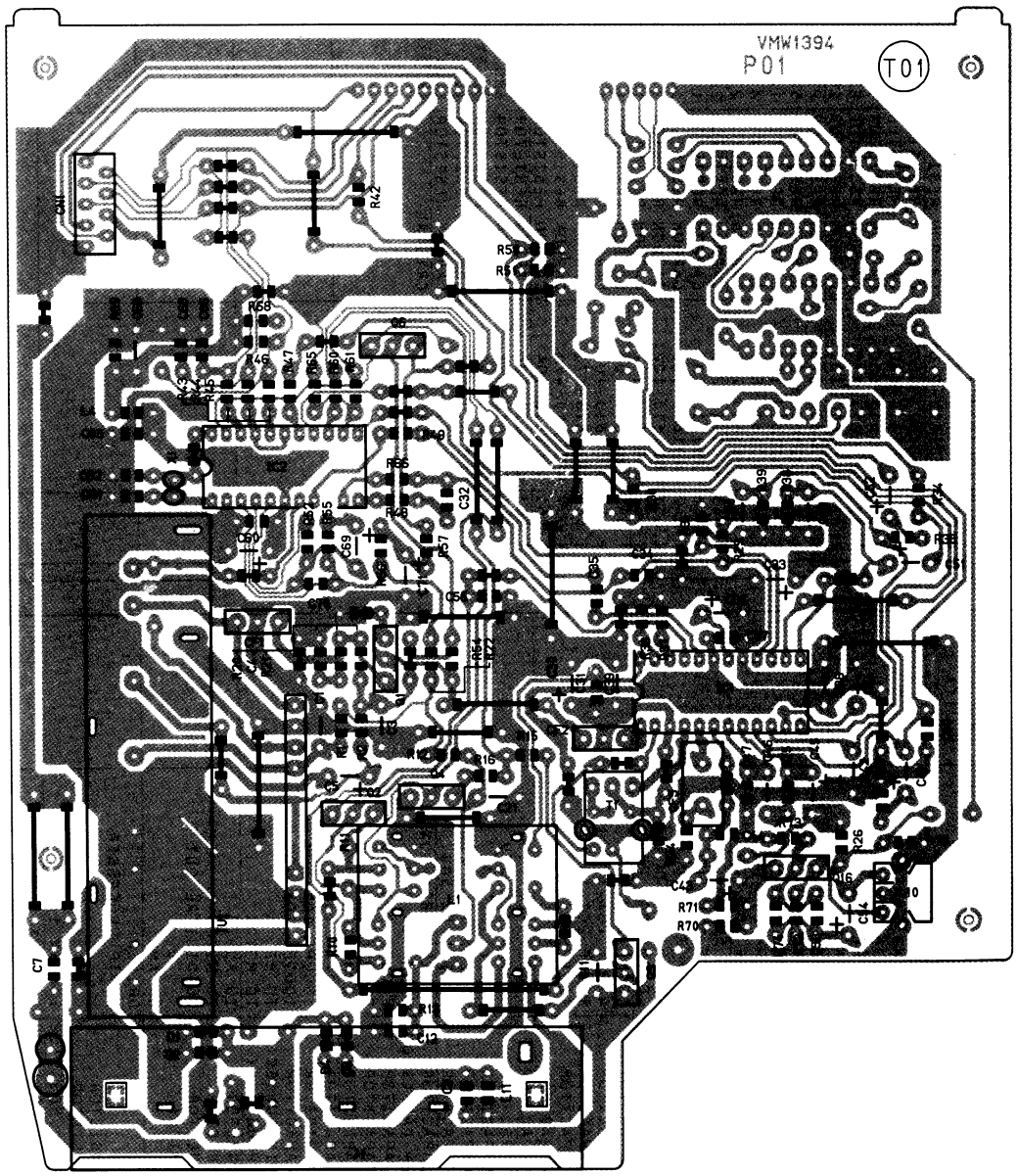

www.manualscenter.com

Fig. 9-6

● Tuner board parts list

BLOCK NO. 03

⚠	REF.	PARTS NO.	PARTS NAME	REMARKS	SUFFIX
	IC 2	LC72136	IC		
	J 1	EMB41YV-302K	ANT TERMINAL	AM/FM ANT	
	L 1	VQZ0098-101	COIL BLOCK	MW/LW RF/OSC	
	L 4	VQP0018-221	INDUCTOR		
	L 10	VQZ0069-002S	TRAP COIL	114KHZ TRAP	
	L 11	VQP0018-2R7	INDUCTOR		
	Q 1	2SC2668(O)	TRANSISTOR		
	Q 2	DTA114YS	TRANSISTOR		
	Q 3	2SC3330	TRANSISTOR		
	Q 4	2SC3330	TRANSISTOR		
	Q 6	DTA114YS	TRANSISTOR		
	Q 16	2SC3330	TRANSISTOR		
	R 1	QRD161J-102	CARBON RESISTOR	1.0K 5% 1/6W	
	R 2	QRD161J-181	CARBON RESISTOR	180 5% 1/6W	
	R 10	QRD161J-102	CARBON RESISTOR	1.0K 5% 1/6W	
	R 12	QRD161J-102	CARBON RESISTOR	1.0K 5% 1/6W	
	R 13	QRD161J-104	CARBON RESISTOR	100K 5% 1/6W	
	R 15	QRD161J-103	CARBON RESISTOR	10K 5% 1/6W	
	R 16	QRD161J-103	CARBON RESISTOR	10K 5% 1/6W	
	R 20	QRD161J-331	CARBON RESISTOE	330 5% 1/6W	
	R 21	QRD161J-224	CARBON RESISTOR	220K 5% 1/6W	
	R 22	QRD161J-331	CARBON RESISTOE	330 5% 1/6W	
	R 24	QRD161J-271	CARBON RESISTOR	270 5% 1/6W	
	R 25	QRD161J-273	CARBON RESISTOR	27K 5% 1/6W	
	R 26	QRD161J-183	CARBON RESISTOR	18K 5% 1/6W	
	R 27	QRD161J-223	CARBON RESISTOR	22K 5% 1/6W	
	R 29	QRD161J-473	CARBON RESISTOR	47K 5% 1/6W	
	R 30	QRD161J-103	CARBON RESISTOR	10K 5% 1/6W	
	R 31	QRD161J-103	CARBON RESISTOR	10K 5% 1/6W	
	R 34	QRD161J-822	CARBON RESISTOR	8.2K 5% 1/6W	
	R 35	QRD161J-822	CARBON RESISTOR	8.2K 5% 1/6W	
	R 36	QRD161J-103	CARBON RESISTOR	10K 5% 1/6W	
	R 37	QRD167J-562	CARBON RESISTOR	5.6K 5% 1/6W	
	R 38	QRD161J-392	CARBON RESISTOR	3.9K 5% 1/6W	
	R 39	QRD161J-392	CARBON RESISTOR	3.9K 5% 1/6W	
	R 42	QRD161J-102	CARBON RESISTOR	1.0K 5% 1/6W	
	R 43	QRD161J-102	CARBON RESISTOR	1.0K 5% 1/6W	
	R 44	QRD161J-102	CARBON RESISTOR	1.0K 5% 1/6W	
	R 45	QRD161J-102	CARBON RESISTOR	1.0K 5% 1/6W	
	R 46	QRD161J-473	CARBON RESISTOR	47K 5% 1/6W	
	R 47	QRD161J-103	CARBON RESISTOR	10K 5% 1/6W	
	R 48	QRD161J-331	CARBON RESISTOE	330 5% 1/6W	
	R 49	QRD161J-102	CARBON RESISTOR	1.0K 5% 1/6W	
	R 50	QRD161J-123	CARBON RESISTOR	12K 5% 1/6W	
	R 51	QRD161J-123	CARBON RESISTOR	12K 5% 1/6W	
	R 52	QRD161J-472	CARBON RESISTOR	4.7K 5% 1/6W	
	R 54	QRD161J-472	CARBON RESISTOR	4.7K 5% 1/6W	
	R 55	QRD161J-182	CARBON RESISTOR	1.8K 5% 1/6W	
	R 56	QRD167J-332	CARBON RESISTOR	3.3K 5% 1/6W	
	R 57	QRD161J-102	CARBON RESISTOR	1.0K 5% 1/6W	
	R 60	QRD161J-102	CARBON RESISTOR	1.0K 5% 1/6W	
	R 61	QRD161J-102	CARBON RESISTOR	1.0K 5% 1/6W	
	R 65	QRD161J-222	CARBON RESISTOR	2.2K 5% 1/6W	
	R 66	QRD161J-222	CARBON RESISTOR	2.2K 5% 1/6W	
	R 68	QRD161J-223	CARBON RESISTOR	22K 5% 1/6W	

BLOCK NO. 03

⚠	REF.	PARTS NO.	PARTS NAME	REMARKS	SUFFIX
	C 1	QCC11EM-223V	C.CAPACITOR	.022MF 20% 25V	
	C 3	QCC11EM-473V	C.CAPACITOR	.047MF 20% 25V	
	C 4	QCVB1CN-103Y	C.CAPACITOR	.010MF 30% 16V	
	C 5	QEK41CM-106	E.CAPACITOR	10MF 20% 16V	
	C 7	QCVB1CN-103Y	C.CAPACITOR	.010MF 30% 16V	
	C 8	QCSB1HK-8R2Y	C.CAPACITOR	8.2PF 10% 50V	
	C 11	QCC11EM-473V	C.CAPACITOR	.047MF 20% 25V	
	C 12	QCS11HJ-150	C.CAPACITOR	15PF 5% 50V	
	C 21	QCC11EM-473V	C.CAPACITOR	.047MF 20% 25V	
	C 30	QEK41CM-476	E.CAPACITOR	47MF 20% 16V	
	C 31	QCS31HJ-390Z	C.CAPACITOR	39PF 5% 50V	
	C 32	QCVB1CN-103Y	C.CAPACITOR	.010MF 30% 16V	
	C 33	QEK61AM-107Z	E.CAPACITOR	100MF 20% 10V	
	C 34	QCS11HJ-150	C.CAPACITOR	15PF 5% 50V	
	C 35	QCVB1CN-103Y	C.CAPACITOR	.010MF 30% 16V	
	C 36	QEK41CM-106	E.CAPACITOR	10MF 20% 16V	
	C 37	QCVB1CN-103Y	C.CAPACITOR	.010MF 30% 16V	
	C 38	QCC11EM-473V	C.CAPACITOR	.047MF 20% 25V	
	C 39	QCC11EM-473V	C.CAPACITOR	.047MF 20% 25V	
	C 40	QCVB1CN-103Y	C.CAPACITOR	.010MF 30% 16V	
	C 41	QEK41HM-104	E.CAPACITOR	.10MF 20% 50V	
	C 42	QEK41HM-474	E.CAPACITOR	.47MF 20% 50V	
	C 43	QEK61HM-335ZN	E.CAPACITOR	3.3MF 20% 50V	
	C 44	QCS11HJ-680	C.CAPACITOR	68PF 5% 50V	
	C 45	QEK41CM-106	E.CAPACITOR	10MF 20% 16V	
	C 46	QCC31EM-333ZV	C.CAPACITOR	.033MF 20% 25V	
	C 47	QCBB1HK-331Y	C.CAPACITOR	330PF 10% 50V	
	C 49	QFLC1HJ-153ZM	M.CAPACITOR	.015MF 5% 50V	
	C 50	QFLC1HJ-153ZM	M.CAPACITOR	.015MF 5% 50V	
	C 51	QEK41HM-105	E.CAPACITOR	1.0MF 20% 50V	
	C 52	QEK41HM-105	E.CAPACITOR	1.0MF 20% 50V	
	C 53	QCBB1HK-102Y	C.CAPACITOR	1000PF 10% 50V	
	C 54	QEK61HM-335ZN	E.CAPACITOR	3.3MF 20% 50V	
	C 55	QCS11HJ-120	C.CAPACITOR	12PF 5% 50V	
	C 60	QEK61AM-107Z	E.CAPACITOR	100MF 20% 10V	
	C 61	QCS11HJ-120	C.CAPACITOR	12PF 5% 50V	
	C 62	QCS11HJ-120	C.CAPACITOR	12PF 5% 50V	
	C 63	QCC11EM-473V	C.CAPACITOR	.047MF 20% 25V	
	C 65	QCBB1HK-102Y	C.CAPACITOR	1000PF 10% 50V	
	C 66	QCBB1HK-151Y	C.CAPACITOR	150PF 10% 50V	
	C 68	QCBB1HK-101Y	C.CAPACITOR	100PF 10% 50V	
	C 69	QEK41HM-225	E.CAPACITOR	2.2MF 20% 50V	
	C 70	QCXB1CM-392YM	C.CAPA. I.M	3900PF 20% 16V	
	C 71	QEK61HM-335ZN	E.CAPACITOR	3.3MF 20% 50V	
	C 72	QCBB1HK-102Y	C.CAPACITOR	1000PF 10% 50V	
	CF 1	VCF2M3B-104	CERAMIC FILTER	FM IF	
	CF 2	VCF2S3B-102	C FILTER	FM IF	
	CF 3	VCF1Z2Z-115Z	CERAMIC FILTER		
	CF 4	CMU2-456A05	CERA LOCK		
	CN 1	VMC0163-009	CONNECTOR		
	D 1	1SS133	SI DIODE		
	D 2	1SS133	SI DIODE		
	D 3	1SS133	SI DIODE		
	D 4	1SS133	SI DIODE		
	IC 1	TA2057N	IC		

■ Cassette mechanism board

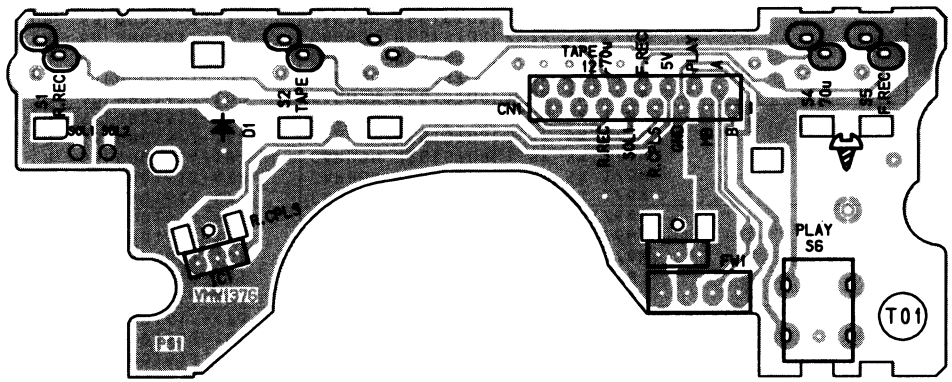

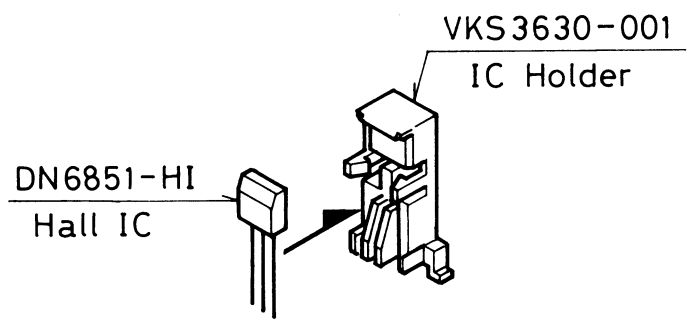

● Cassette mechanism board parts list

BLOCK NO. 07MM

⚠	REF.	PARTS NO.	PARTS NAME	REMARKS	QTY	SUFFIX	CLR
		VMW1376-001X	P.W.B 1/10		1		
	CN 1	VMC0314-P12	CONNECTOR		1		
	D 1	1SR139-100	SI DIODE		1		
	FW 1	VWSC04-11A13K	TM FLAT WIRE		1		
	IC 1	DN6851-HI	HALL IC		1		
	ICHOL	VKS3630-001MM	IC HOLDER		1		
	S 1	MXS00220MVL0	CASSETTE SWITCH		4		
	S 2	MXS00220MVL0	CASSETTE SWITCH		1		
	S 4	MXS00220MVL0	CASSETTE SWITCH		1		
	S 5	MXS00220MVL0	CASSETTE SWITCH		1		
	S 6	QSEC001-E03	SWITCH		1		

BLOCK NO. 03

⚠	REF.	PARTS NO.	PARTS NAME	REMARKS	SUFFIX
	R 69	QRD161J-103	CARBON RESISTOR	10K 5% 1/6W	
	R 70	QRD161J-393	CARBON RESISTOR	39K 5% 1/6W	
	R 71	QRD161J-823	CARBON RESISTOR	82K 5% 1/6W	
	R 72	QRD161J-122	CARBON RESISTOR	1.2K 5% 1/6W	
	R 73	QRD161J-222	CARBON RESISTOR	2.2K 5% 1/6W	
	R 74	QRD167J-332	CARBON RESISTOR	3.3K 5% 1/6W	
	R 75	QRD161J-822	CARBON RESISTOR	8.2K 5% 1/6W	
	T 1	VQT7A21-111	IFT		
	TU 1	VAF2S12-002	FRONT END	FM TU	
	X 1	VCX5044-001	CRYSTAL		

www.manualscenter.com

10 Exploded view of enclosure assembly and parts list

■ CD/tuner section

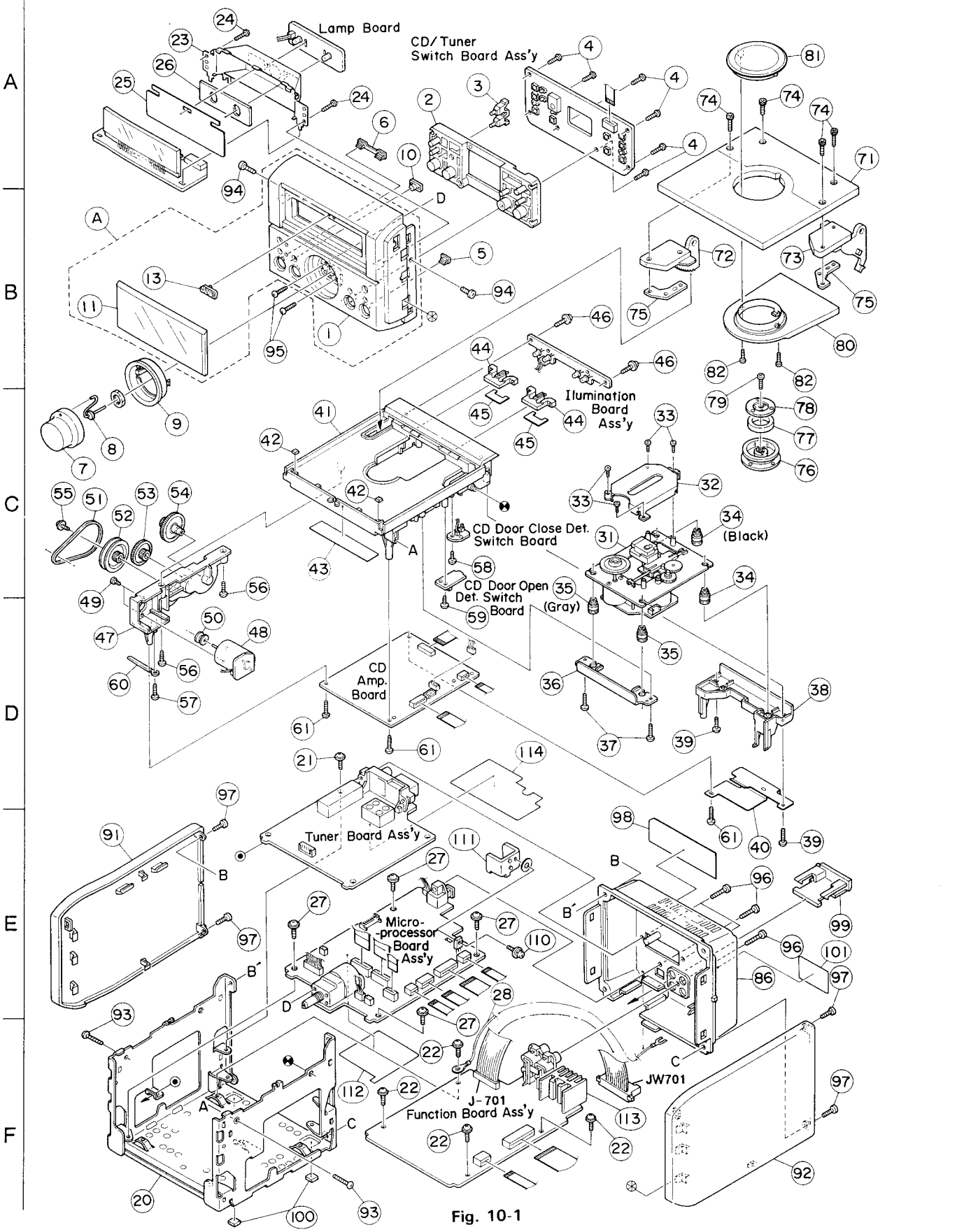

Fig. 10-1

www.manualscenter.com

● CD / Tuner section parts list

BLOCK NO. M1MM

⚠	REF.	PARTS NO.	PARTS NAME	REMARKS	QTY	SUFFIX	CLR
	A	ZCUXD66K-FTN	FRONT PANEL ASS	NO.1,11,13	1		
	1	VJG1354-001	FRONT PANEL(T)		1		
	2	VXP3722-001	BUTTON(CD)		1		
	3	VJK4458-001	LED LENS(CD)		1		
	4	SBSF2610Z	SCREW	BUTTON	6		
	5	VJK4452-001	BUTTON LENS(A)	PLAY/PAUSE	1		
	6	VJK4453-001	BUTTON LENS(B)	AUX,TUN/BA	1		
	7	VXL4440-001	MAIN VOLUME		1		
	8	VJK4454-001	VOL.INDICATOR	MAIN VOL	1		
	9	VJD5469-002	VOLUME ESC.		1		
	10	E408131-001	REMOTE LENS		1		
	11	VJK3662-001	LCD LENS		1		
	13	E406971-221	JVC MARK		1		
	20	VKL1433-001	BOTTOM CHASSIS		1		
	21	GBST3006Z	SCREW	TU PWB+CHASSIS	1		
	22	GBST3006Z	SCREW	FUNC PWB+CHASSI	4		
	23	VYH3881-001	LAMP CASE		1		
	24	SBSF2610Z	SCREW	L.CASE+F.PANEL	2		
	25	VYTT664-001	LCD FILTER		1		
	26	VYH8034-001	REFLECTOR	FOR LAMP CASE	1		
	27	GBST3006Z	SCREW	CPU PWB+CHASSIS	4		
	28	VMZ0146-001	E.WIRE ASS'Y	FOR FTZ	1		
	31	----------	CD MECHA	OPTIMA-6	1		
	32	VJD5410-005	PICK COVER		1		
	33	SDSF2006M	SCREW	CD MECHA+P.COVE	4		
	34	E75609-001	INSULATOR		2		
	35	E75609-002	INSULATOR		2		
	36	VYH7815-001	CD MECHA HOLDER		1		
	37	SBSF3010Z	SCREW	CASE+HOLDER	2		
	38	VYH3790-002	CD MECHA HOLDER		1		
	39	SBSF3010Z	SCREW	CASE+HOLDER	2		
	40	VMA3215-001	SHIELD(CD)	FOR CD MECA WIR	1		
	41	VJD1199-001	CD CASE		1		
	42	VYSR102-059	SPACER	RUBBER FOR CASE	2		
	43	E406709-001	LASER CAUTION		1		
	44	VJK4455-001	CD LED LENS		2		
	45	VYH8013-001	LED SHEET	FOR CD LED LENS	2		
	46	SBSF2610Z	SCREW	CASE+LED PWB	2		
	47	VYH3785-001	GEAR BKT		1		
	48	MXN-13FB12F	DC MOTOR ASS'Y	CD DOOR	1		
	49	SPSP3004Z	SCREW	MOTOR+GEAR BKT	2		
	50	VYH7699-001	PULLEY	MOTOR	1		
	51	VKB3000-144Y	BELT		1		
	52	VYH7356-002	PULLEY		1		
	53	VYH7357-001	GEAR(A)		1		
	54	VYH7358-001	GEAR(B)		1		
	55	GBSF3006Z	SCREW	PULLEY+GEAR BKT	1		
	56	SBSF3010Z	SCREW	CD CASE+GEAR BK	2		
	57	SBSF3010Z	SCREW	FOR WIRE CLANP	1		
	58	SBSF3010Z	SCREW	SW PWB+CD CASE	1		
	59	SBSF3010Z	SCREW	SW-PWB+CD CASE	1		
	60	VKZ4001-110	WIRE CLAMP		1		
	61	SBSF3010Z	SCREW	CD AMP PWB+CD	3		
	71	VJT3376-001	CD DOOR		1		
	72	VYH7985-001	CD DOOR HOL(L)		1		

BLOCK NO. M1MM

⚠	REF.	PARTS NO.	PARTS NAME	REMARKS	QTY	SUFFIX	CLR
	73	VYH7986-001	CD DOOR HOL(R)		1		
	74	VKZ4765-001	S.BOLT(DIN)		4		
	75	VYH7987-001	STOPPER PLATE		2		
	76	VYH3726-001	CLAMPER		1		
	77	VYH7313-003	MAGNET		1		
	78	VYH7677-201	YOKE		1		
	79	SDSF2606Z	SCREW	FOR CLAMPER	1		
	80	VJK3663-001	CD ILLUMI LENS		1		
	81	VJT4227-002	TOP ORNAMENT		1		
	82	SDSF2006M	SCREW	TOP ORN+CLP HOL	2		
	86	VJG1355-001	REAR PANEL(T)		1		
	91	VJC2548-001	SIDE PANEL(L)		1		
	92	VJC2549-001	SIDE PANEL(R)		1		
	93	SBSF3010Z	SCREW	CD+CHASSIS UNIT	2		
	94	SBST3006Z	SCREW	F.PANEL+CHASSIS	2		
	95	SDST3006Z	SCREW	F.PANEL+VOLUME	2		
	96	SDSF3010M	SCREW	R.PANEL+JACK	4		
	97	SDST3008M	SCREW	R.PANEL+S.PANEL	4		
⚠	98	VYN9259-S101	NAME PLATE		1		
	99	VYH7991-001	WIRE HOLDER		1		
	100	E75896-009	FELT SPACER	TO BOTTOM	2		
	101	E70891-001	CLASS 1 LABEL		1		
	110	DPSP3008Z	SCREW		1		
	111	VYH8010-001	HEAT SINK		1		
	112	VMA4663-001	SHIELD SHEET		1		
	113	VYH7734-002	HEAT SINC	FOR Q7906	1		
	114	VMA4661-001	SHIELD		1		
⚠	J-701	EMV7130-017	WIRE HOLDER	FOR JW701 BOARD	1		
⚠	JW701	VMP0092-001	SYSTEM WIRE ASY	FOR SYSTEM WIRE	1		

www.manualscenter.com

■ Dcek and amplifire/ power supply section

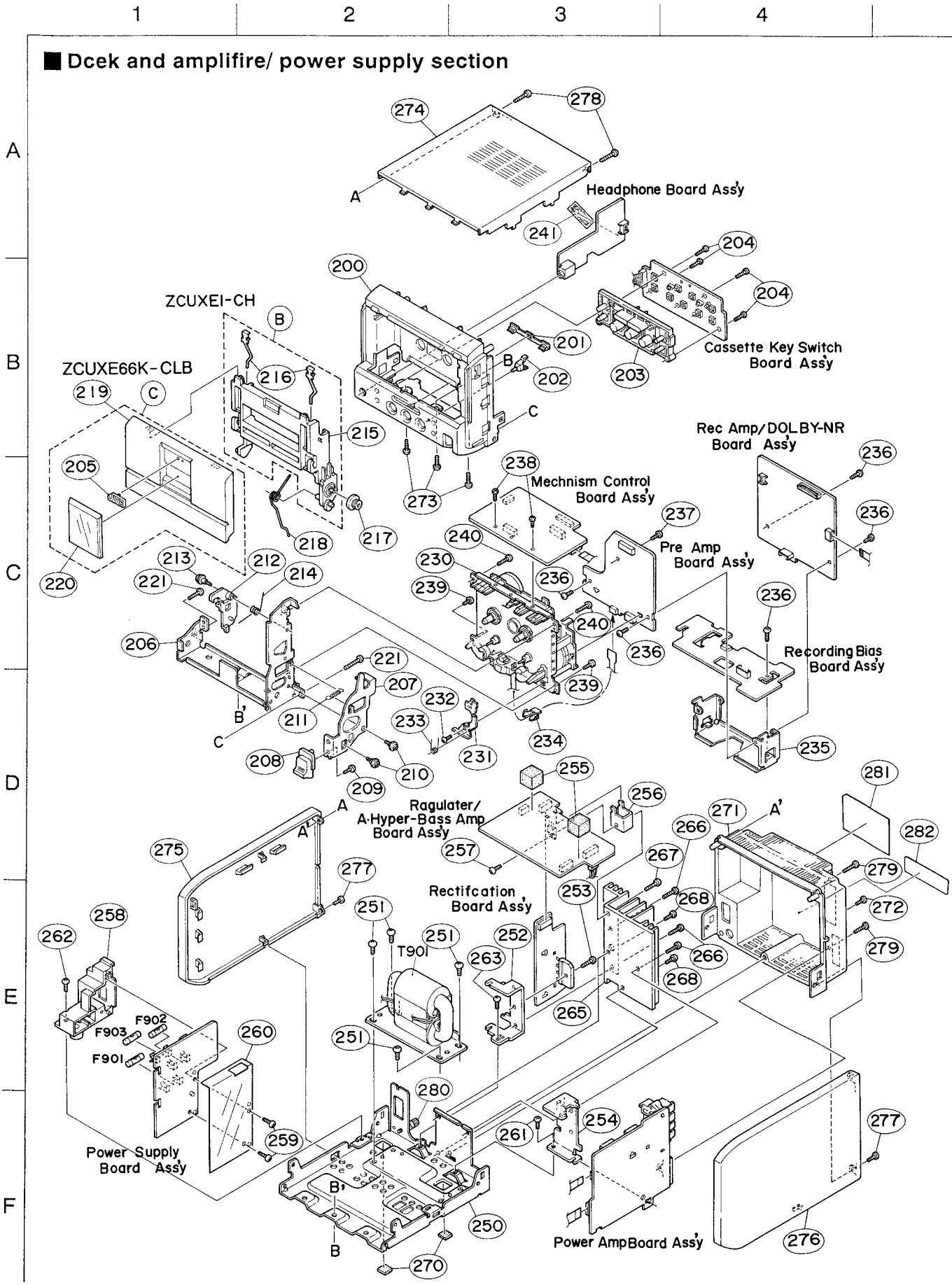

Fig. 10-2

www.manualscenter.com

● Deck and amp. / power supply section parts list

BLOCK NO. M2MM

⚠	REF.	PARTS NO.	PARTS NAME	REMARKS	QTY	SUFFIX	CLR
	B	ZCUXE1-CH	CASSETTE HOLDER	NO.215-216	1		
	C	ZCUXD66K-CLB		NO.205,219-220	1		
	200	VJG1353-001	FRONT PANEL(D)		1		
	201	VJK4456-001	BUTTON LENS(C)	L/R PLAY	1		
	202	VJK4457-001	LED LENS(DECK)	REC/PAUSE	1		
	203	VXP3721-001	BUTTON(DECK)		1		
	204	SBSF2610Z	SCREW	FRONT+SW BOARD	4		
	205	E406971-221	JVC MARK		1		
	206	VYH3879-002	DOOR HOLDER		1		
	207	VYH7980-001	EJECT LEVER		1		
	208	VXQ4122-001	EJECT KNOB		1		
	209	SBSF2610Z	SCREW	EJECT KNOB	1		
	210	VKZ4323-002	SCREW	EJECT LEVER	2		
	211	VKW3002-274	TENSION SPRING	EJECT LEVER	1		
	212	VYH7347-001	EJECT ARM		1		
	213	VKZ4341-001	SPECIAL SCREW	EJECT ARM	1		
	214	VKW4938-001	TORTION SPRING	EJECT ARM	1		
	215	VJT2263-005	CASS DOOR		1		
	216	VKY4180-001	CASSETTE SPRING		2		
	217	VYH5601-001	GEAR		1		
	218	VKW5217-001	DOOR SPRING		1		
	219	VJT2356-001	DOOR COVER		1		
	220	VJT4226-001	DOOR LENS		1		
	221	SBSF3010Z	SCREW	HOLDER+F.PANEL	2		
	230	----------	MECHA ASSY		1		
	231	VKL7777-002	EJECT SAFETY(R)		1		
	232	SBSF3010Z	SCREW	EJECT SAFTEY	1		
	233	VKW5069-002	TORSION SPRING	EJECT SAFTEY	1		
	234	VKS3655-002	F.P.C. HOLDER	FOR HEAD WIRE	1		
	235	VYH7910-201	BOARD BRACKET	HOLDER+MECHA.	1		
	236	SBST3006Z	SCREW	BKT+CASS PWB	5		
	237	SBST3006Z	SCREW	BKT/PWB SA+MECH	1		
	238	SDST2604Z	SCREW	MECHA CON+MECHA	2		
	239	SBST3006Z	SCREW	HOLDER+MECHA	2		
	240	SBSF3010Z	SCREW	F.PANEL+MECHA	2		
	241	VYSA1R4-059	SPACER		1		
	250	VKL2742-001	BOTTOM CHASSIS	EGC TO.8	1		
	251	SBST4006Z	SCREW	TRANS	4		
	252	VYH7982-001	IC HOLDER(A)		1		
	253	SBSF3010Z	SCREW	IC + IC HOLDER	1		
	254	VYH7983-001	IC HOLDER(B)	POWER IC	1		
	255	VYSH113-008	SPACER	TO TOP PWB	2		
	256	VYH7984-001	IC HOLDER(C)		1		
	257	SBSF3010Z	SCREW	FOR IC HOLDER(C	1		
	258	VYH3882-002	AC JACK HOLDER	AC JACK,VOL SEL	1		
	259	SBSF3010Z	SCREW	AC J.HOL+AC PWB	2		
	260	VMA4650-002	BARRIER	FOR AC/FUSE PWB	1		
	261	SBST3008Z	SCREW	AMP IC HOL+BOTT	1		
	262	SBST3008Z	SCREW	FUSE PWB+BOTTOM	1		
	263	SBST3008Z	SCREW	AC-DC PWB+BOTTO	1		
	265	VMH4052-001	HEAT SINK		1		
	266	SBSF3014Z	SCREW		3		
	267	SBSF3014Z	SCREW	IC HOL(C)+HEAT	1		
	268	SBST3008Z	SCREW	BOTTOM CH+H.SIN	2		

BLOCK NO. M2MM

⚠	REF.	PARTS NO.	PARTS NAME	REMARKS	QTY	SUFFIX	CLR
	270	E75896-009	FELT SPACER	BOTTOM SIDE	2		
	271	VJG1356-001	REAR PANEL(D)		1		
	272	SDST3008M	SCREW	REAR PANEL+CHAS	1		
	273	SBST3008Z	SCREW		3		
	274	VJC3276-001	TOP COVER		1		
	275	VJC2548-001	SIDE PANEL(L)		1		
	276	VJC2549-001	SIDE PANEL(R)		1		
	277	SDST3008M	SCREW	S.PANEL,RAER	2		
	278	SDSF3010M	SCREW	SIDE PANEL,TOP	2		
	279	SDSF3010M	SCREW	FOR JACK	2		
	280	E408091-001	GND TERMINAL	TO REAR ,BOTTOM	1		
⚠	281	VYN9259-S902T	NAME PLATE	TO REAR PANEL	1	B	
		VYN9259-S005T			1	E	
		VYN9259-S008T			1	G	
		VYN9259-S015T			1	GI	
		VYN9259-S009T			1	EN	
	282	VND4118-004	CAUTION LABEL	TO REAR PANEL	1		
⚠	F 901	QMF51E2-R63SBS	FUSE		1		
⚠	F 902	QMF51A2-8R0	FUSE		1		
⚠	F 903	QMF51E2-1R6J1	FUSE		1		
⚠	T 901	VTP09J2-12A	POWER TRANS		1		

www.manualscenter.com

11 Exploded view of mechanism assembly and parts list

■ Cassette mechanism section

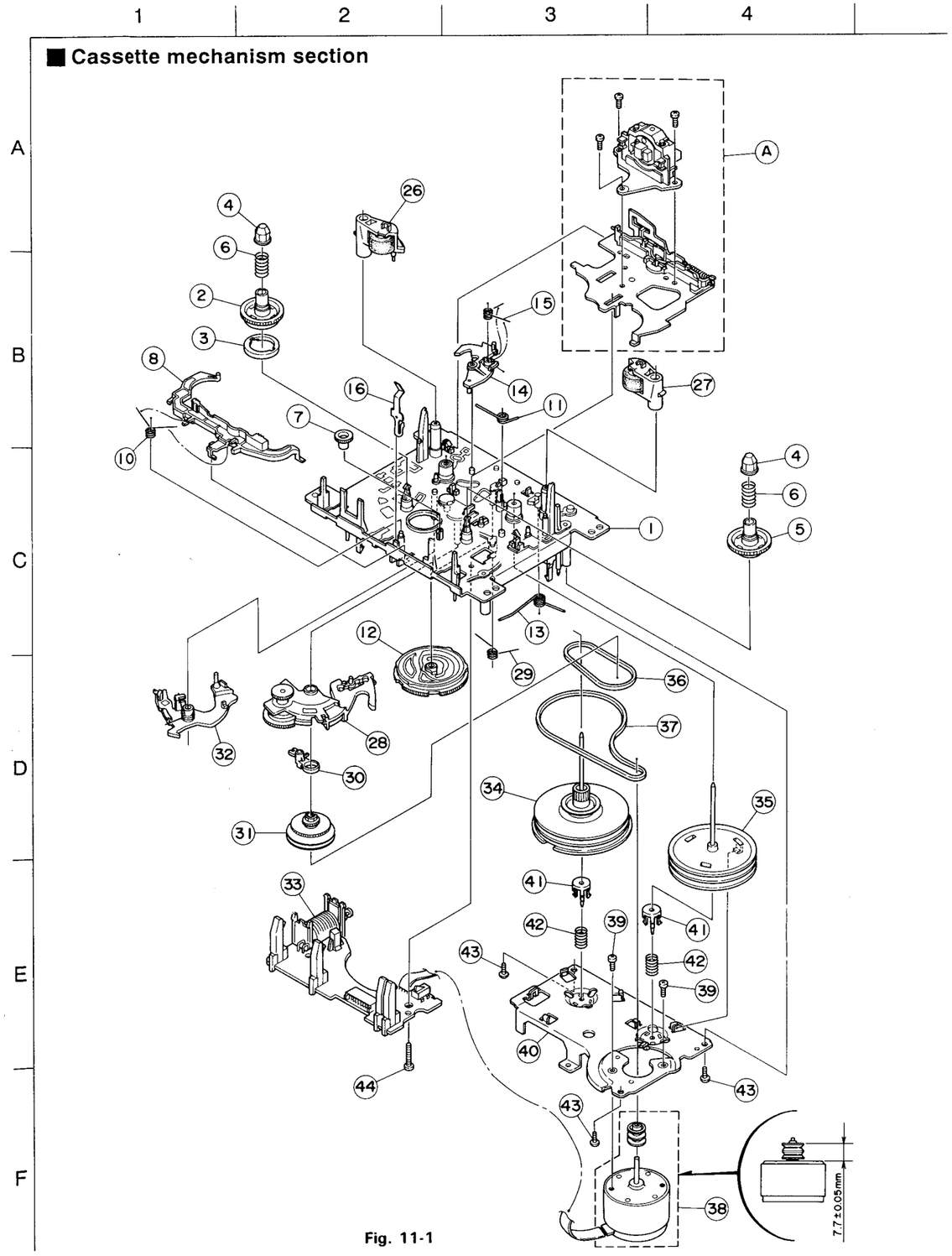

Fig. 11-1

● Cassette mechanism parts list

BLOCK NO. M3MM

REF.	PARTS NO.	PARTS NAME	REMARKS	QTY	SUFFIX	CLR
A	VKM3852-00B	HEAD BLOCK		1		
1	VKS1147-00A	CHASSIS B. ASY		1		
2	VKS3707-002	REEL GEAR		1		
3	VKZ4690-002	MAGNET		1		
4	VKS3708-002	REEL FEATHER		2		
5	VKS3707-002	REEL GEAR		1		
6	VKW5162-002	B.T. SPRING		2		
7	VKS5519-002	IDLER GEAR		1		
8	VKS2261-002	REEL BRAKE		1		
10	VKW5178-001	BRAKE SPRING		1		
11	VKW5202-002	LIFTER SPRING		1		
12	VKS1150-001	CONTROL CAM		1		
13	VKW5170-002	CAM SPRING		1		
14	VKS2255-001	DIR. TRIGGER		1		
15	VKW5163-001	DIR. SPRING		1		
16	VKY4670-001	CASSETTE SPRING		1		
26	VKP4231-00B	P.ROLLER(R) ASY		1		
27	VKP4232-00A	P.ROLLER(L) ASY		1		
28	VKS3714-00B	FR ARM ASY		1		
29	VKW5173-001	FR SPRING		1		
30	VKS3719-001	ELEVATOR RING		1		
31	VKS5523-00C	MAIN PLY ASY		1		
32	VKS5525-00B	TRIGGER ARM ASY		1		
33	VGP2401-00A	DC SOLENOID		1		
34	VKF3200-00A	F.WHEEL (R) ASY		1		
35	VKF3202-00A	F.WHEEL (L) ASY		1		
36	VKB3000-167	REEL BELT		1		
37	VKB3000-160	CAPSTAN BELT		1		
38	MSI-5U2LWA	D.C.MOTOR		1		
39	SPSP2603Z	SCREW		2		
40	VKM3833-001	FM BRACKET		1		
41	VKS5524-001	THRUST GUIDE		2		
42	VKW5177-002	THRUST SPRING		2		
43	SBSF2608Z	SCREW		3		
44	SDST2612Z	SCREW		1		

www.manualscenter.com

■ CD mechanism section

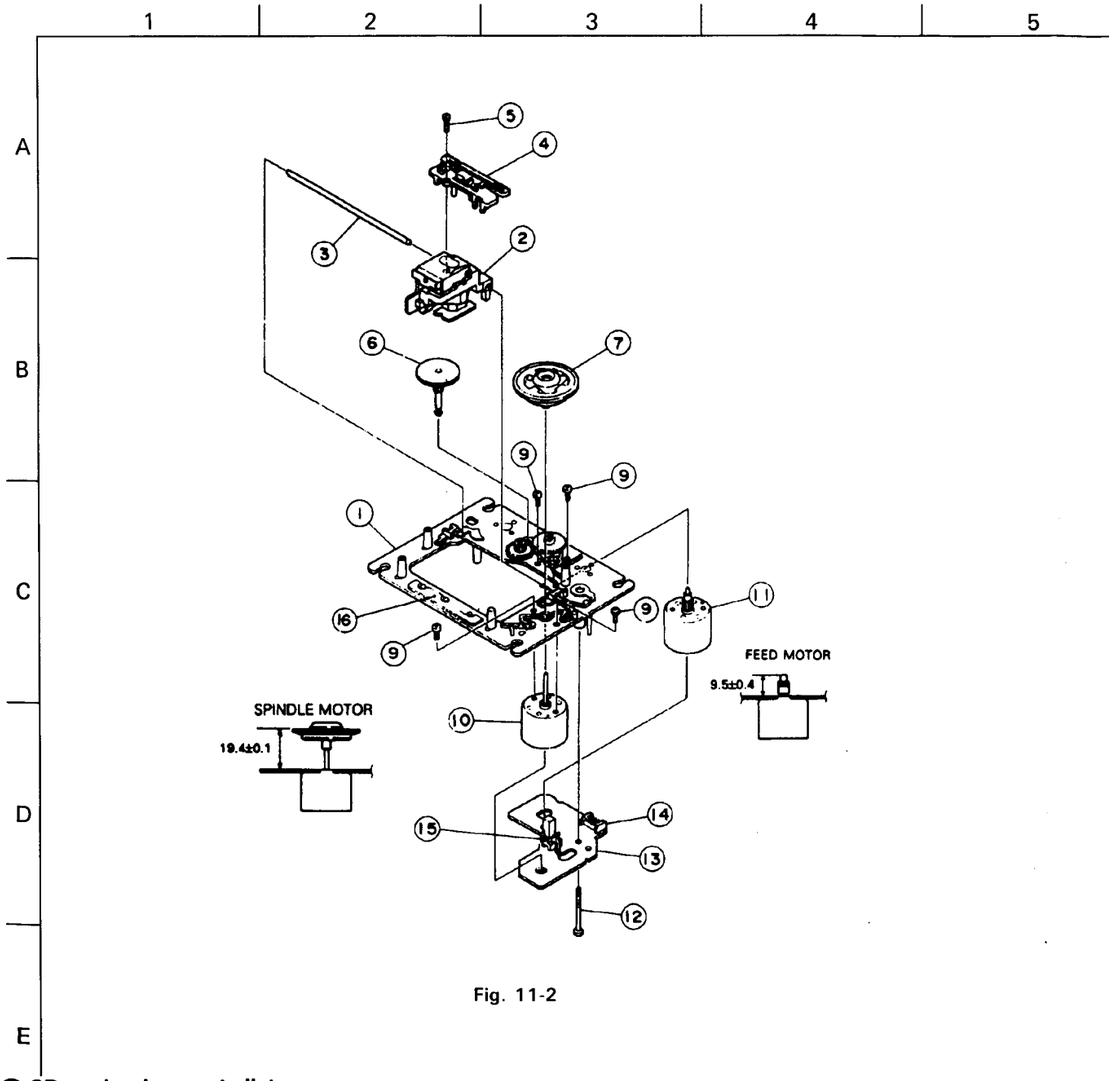

Fig. 11-2

● CDmechanism parts list

BLOCK NO. M4MM

⚠	REF.	PARTS NO.	PARTS NAME	REMARKS	QTY	SUFFIX	CLR
	1	EPB-002A	BASE ASS'Y		1		
	2	OPTIMA-6S	PIC-UP		1		
	3	E406777-001	GUIDE SHAFT		1		
	4	E307746-001	CD RACK		1		
	5	SDSF2006Z	SCREW	CD LACK ASS'Y	1		
	6	EPB-003A	MECHA GIAR		1		
	7	E75807-301	CD T.TABLE ASSY		1		
	9	SDSP2003N	SCREW	FOR MOTOR	1		
	10	E406783-001	SP MOTOR	SPINDL MOTOR	1		
	11	E406784-001SA	DC MOTOR ASS'Y	FEED MOTOR	1		
	12	E75832-001	S.SCREW	M.REAF SWITCH	1		
	13	EMW10190-001	BOARD	LEAF SWITCH	1		
	14	EMV5109-006B	6P PLUG ASSY		1		
	15	ESB1100-005	LEAF SWITCH		1		
	16	E407212-001	DAMPER		1		

12 Illustration of packing and parts list

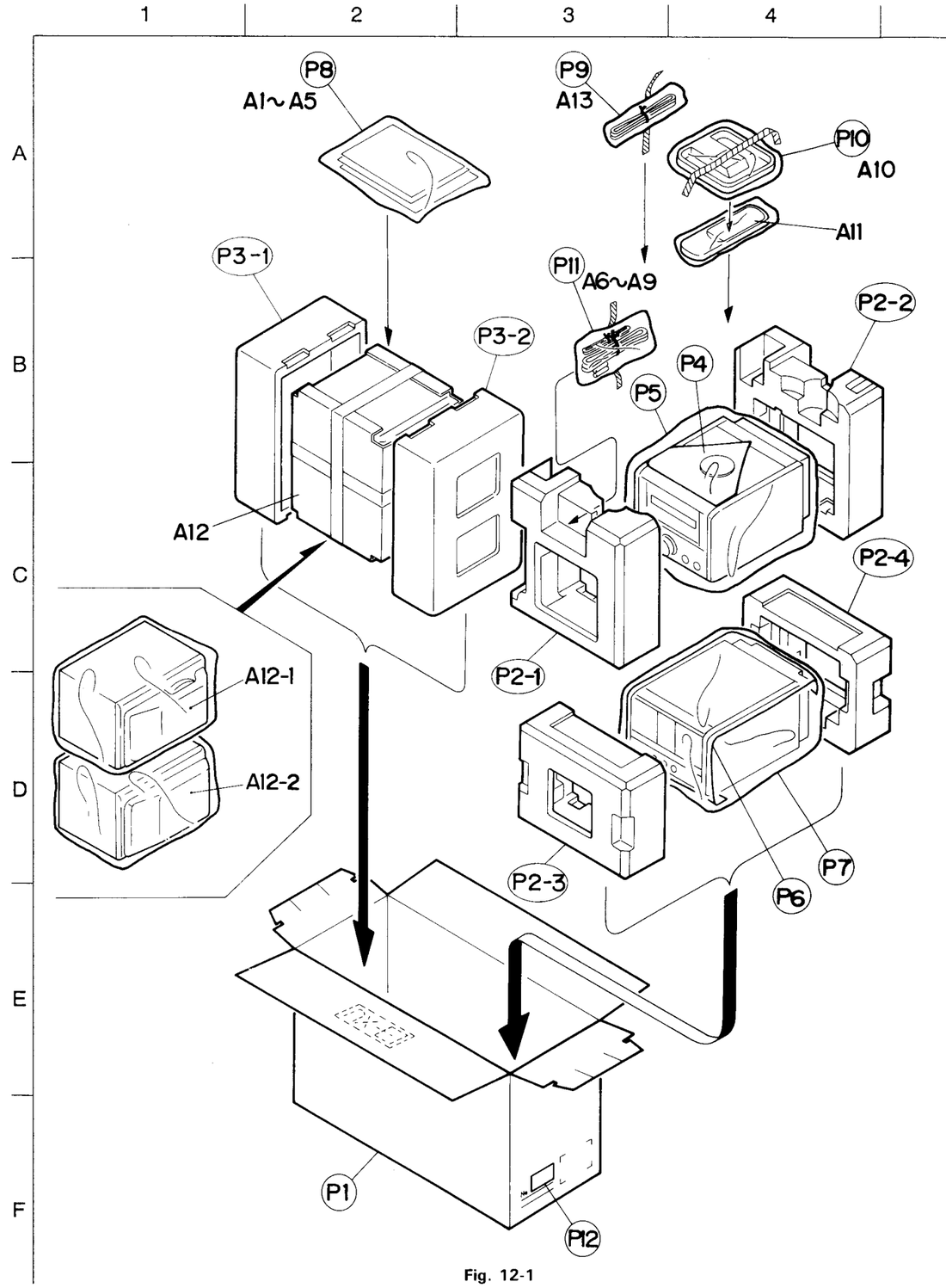

Fig. 12-1

● Packing parts list

BLOCK NO. M5MM

⚠	REF.	PARTS NO.	PARTS NAME	REMARKS	QTY	SUFFIX	CLR
	P 1	VPC9259-S001	CARTON		1		
	P 2-1	VPH1674-001	CUSHION(CD F)	CD/TUNER FRONT	1		
	P 2-2	VPH1674-002	CUSHION(CD R)	CD/TUNER REAR	1		
	P 2-3	VPH1674-003	CUSHION(DECK F)	DECK/AMP FRONT	1		
	P 2-4	VPH1674-004	CUSHION(DECK R)	DECK/AMP REAR	1		
	P 3-1	VPH1679-001	SP CUSHION (LEF	SPEAKER OUTSIDE	1		
	P 3-2	VPH1679-002	SP CUSHION (RIG	SPEAKER INSIDE	1		
	P 4	VPK3001-003	SHEET	FOR CD/TUNER	1		
	P 5	VPE3005-063	POLY BAG	FOR CD/TUNER	1		
	P 6	VPK4002-009	SHEET	FOR DECK/AMP	1		
	P 7	VPE3005-063	POLY BAG	FOR DECK/AMP	1		
	P 8	VPE3005-007	POLY BAG	INSTRUCTIONS	1		
	P 9	QPGA015-03503	POLY BAG	FOR POWER CORD	1		
	P10	VPE3005-042	POLY BAG	AM LOOP ANT	1		
	P11	QPGA010-03003	POLY.BAG	ACCESSORIES	1		
	P12	----------	CARTON LABEL	4975769120978	1		

● Accessores parts list

BLOCK NO. M5MM

⚠	REF.	PARTS NO.	PARTS NAME	REMARKS	QTY	SUFFIX	CLR
	A 1	VNN9259-672	INSTRUCTIONS		1	B	
		VNN9259-251S	INSTRUCTIONS		1	E,GI	
		VNN9259-261S	INSTRUCTIONS		1	E,EN,G	
		VNN9259-271S	INSTRUCTIONS		1	EN	
	A 2	E43486-340B	SAFETY INST SHE		1		
	A 5	BT-54003-1	WARRANTY CARD		1	B	
		BT-20066A	WARRANTY CARD		1	B	
		BT-20135	WARRANTY CARD		1	G	
	A 6	EMZ2001-014	ADAPTER		1		
	A 7	UM-3(DJ)-2PSA	BATTERY	NO.SERVICE	2		
	A 8	VMZ0136-001	B.IN ANTENNA		1		
	A 9	VMP0093-002	SPEAKER CORD		2		
	A 10	EQB4001-015	AM LOOP ANT		1		
	A 11	RM-RXUD66	REMOCON UNIT	VGR0043-101	1		
⚠	A 13	QMP5520-183BS	POWER CORD		1	B	
⚠		QMP39F0-183	POWER CORD		1	E,EN,G,GI	
	A12-1	UXD66K-SPBOX-R	SPEAKER BOX	R SIDE	1		
	A12-2	UXD66K-SPBOX-L	SPEAKER BOX	L SIDE	1		

www.manualscenter.com