COMPACT DISC PLAYER

CD-X2

SERVICE MANUAL

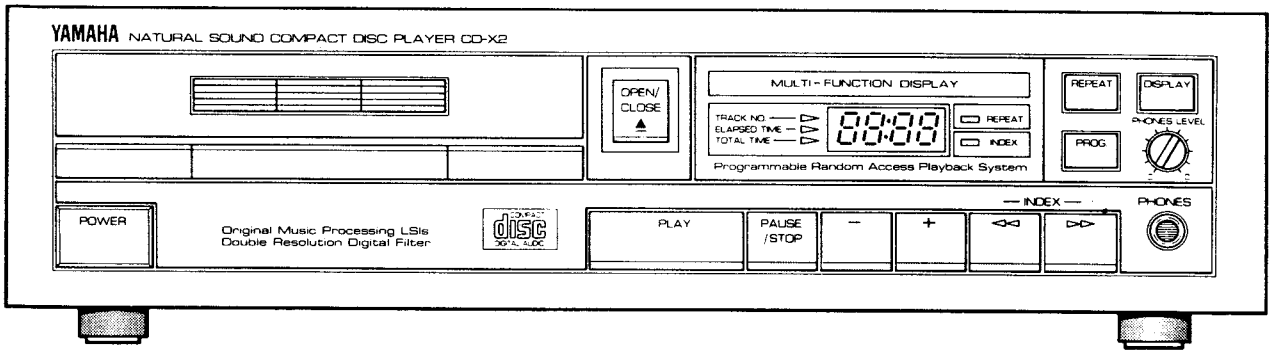

IMPORTANT NOTICE

This manual has been provided for the use of authorized Yamaha Retailers and their service personnel. It has been assumed that basic service procedures inherant to the industry, and more specifically Yamaha Products, are already known and understood by the users, and have therefore not been restated.

WARNING: Failure to follow appropriate service and safety procedures when servicing this product may result in personal injury, destruction of expensive components and failure of the product to perform as specified. For these reasons, we advise all Yamaha product owners that all service required should be performed by an authorized Yamaha Retailer or the appointed service representative.

IMPORTANT: The presentation or sale of this manual to any individual or firm does not constitute authorization, certification, recognition of any applicable technical capabilities, or establish a principle-agent relationship of any form.

The data provided is believed to be accurate and applicable to the unit(s) indicated on the cover. The research, engineering, and service departments of Yamaha are continually striving to improve Yamaha products. Modifications are, therefore, inevitable and changes in specification are subject to change without notice or obligation to retrofit. Should any discrepancy appear to exist, please contact the distributor's Service Division.

WARNING: Static discharges can destroy expensive components. Discharge any static electricity your body may have accumulated by grounding yourself to the ground buss in the unit (heavy gauge black wires connect to this buss).

IMPORTANT: Turn the unit OFF during disassembly and parts replacement. Recheck all work before you apply power to the unit.

CONTENTS

TO SERVICE PERSONNEL 1/2
INTERLOCK OPERATION 3
SPECIFICATIONS 3
REAR PANELS 4
INTERNAL VIEW 5
DISASSEMBLY PROCEDURES 5/6
ADJUSTMENTS . . . . . 7 ~ 19
PRINTED CIRCUIT BOARD . . . . . 20 ~ 23
WIRING 24
IC BLOCK DIAGRAM . . . . . 25 ~ 28
BLOCK DIAGRAM 29
SCHEMATIC DIAGRAM 30/31
PARTS LIST . . . . . 32 ~ 41

* This service manual is a supplement to 004580 .

004627

www.manualscenter.com

SINCE 1887 YAMAHA

NIPPON GAKKI CO., LTD. HAMAMATSU, JAPAN.

2.621k-274 Printed in Japan '85.5

■TO SERVICE PERSONNEL

1. Critical Components Information.
   Components having special characteristics are marked ⚠ and must be replaced with parts having specifications equal to those originally installed.

2. Leakage Current Measurement (For 120V Model Only).
   When service has been completed, it is imperative that you verify that all exposed conductive surfaces are properly insulated from supply circuits.

- Meter impedance should be equivalent to 1500 ohm shunted by 0.15μF
- Leakage current must not exceed 0.5mA.
- Be sure to test for leakage with the AC plug in both polarities.

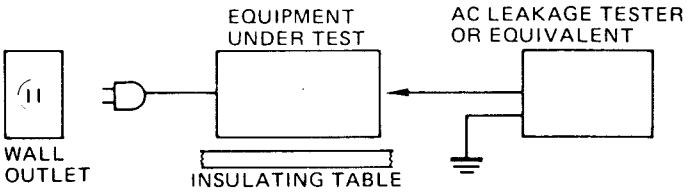

CAUTION – USE OF CONTROLS, ADJUSTMENTS, OR PERFORMANCE OF PROCEDURES OTHER THAN THOSE SPECIFIED HEREIN, MAY RESULT IN HAZARDOUS RADIATION EXPOSURE.

THE COMPACT DISC PLAYER SHOULD NOT BE ADJUSTED OR REPAIRED BY ANYONE EXCEPT PROPERLY QUALIFIED SERVICE PERSONNEL.

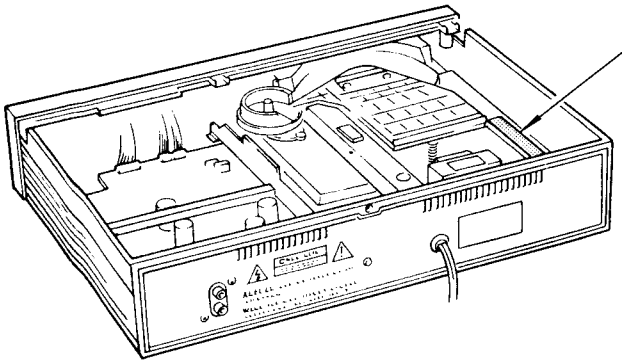

U.S.A. model

DANGER–Invisible laser radiation when open and interlock failed or defeated.
AVOID DIRECT EXPOSURE TO BEAM. (CA07626-1)

Canadian model

CAUTION –HAZARDOUS LASER AND ELECTROMAGNETIC RADIATION WHEN OPEN AND INTERLOCK DEFEATED.
ATTENTION –RAYONNEMENT LASER ET ELECTROMAGNETIQUE DANGEREUX SI OUVERT AVEC L'ENCLENCHEMENT DE SECURITE ANNULE. (CB62428)

BOTTOM SIDE

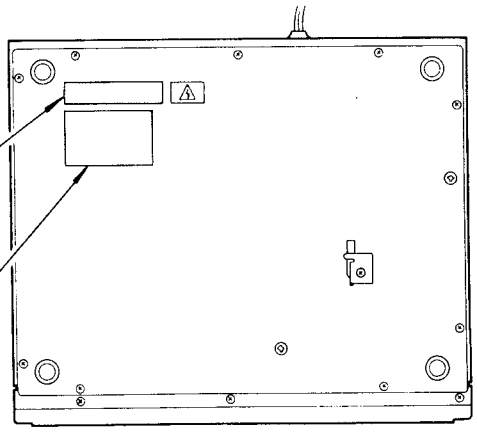

THIS PRODUCT COMPLIES WITH DHHS RULES 21 CFR SUBCHAPTER J APPLICABLE AT DATE OF MANUFACTURE (CB62401-0)

MANUFACTURED BY
NIPPON GAKKI CO.,LTD
10-1 NAKAZAWA-CHO, HAMAMATSU-SHI,
SHIZUOKA-KEN, JAPAN
·
MANUFACTURED
date code
(CB62400-1)

Front side

LASER BEAM RADIATION SPOT

Laser Diode Properties
Material: Ga-Al-As
Wavelength: 760 – 800 nm (25°C)
Laser Output: Continuous Wave max. 5 mW

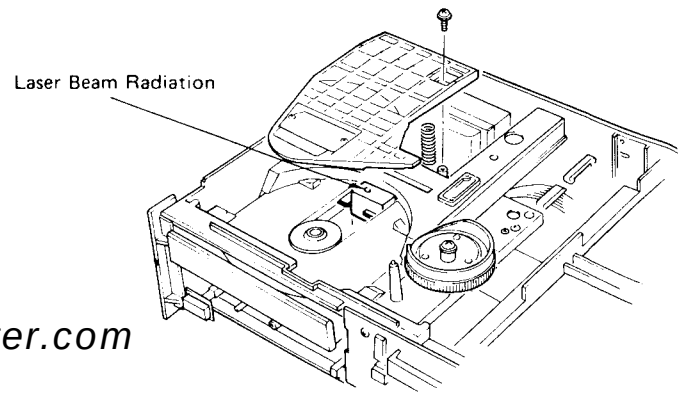

www.manualscenter.com

European model

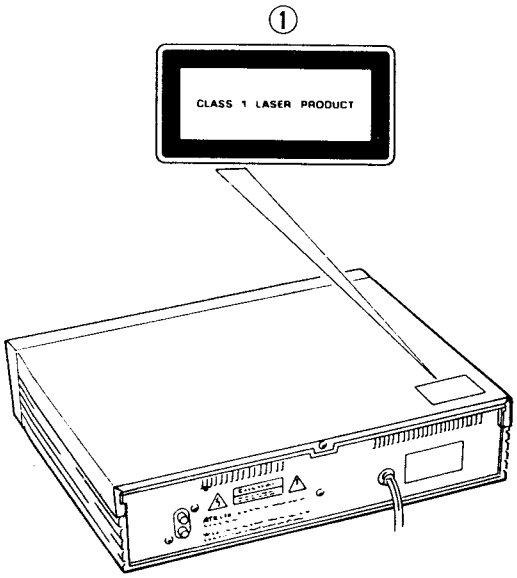

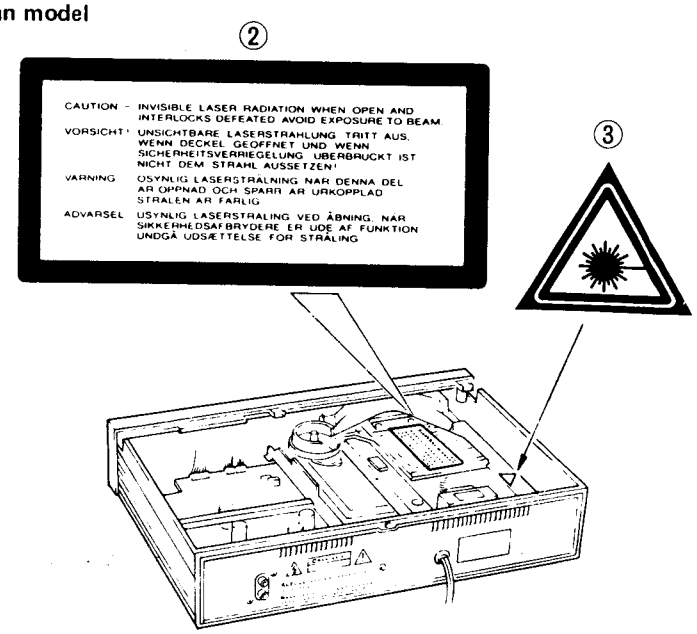

English

①THIS LABEL IS ATTACHED TO THE PLACE AS ILLUSTRATED TO INFORM THAT THE APPARATUS CONTAINS A LASER COMPONENT.

②THIS LABEL IS ATTACHED IN THE POSITION SHOWN IN THE ILLUSTRATION SO THAT ANY FURTHER PROCEDURE WILL BRINGING THE USER INTO EXPOSURE WITH THE LASER BEAM.

③THE WARNING LABEL INFORMING OF RADIATION IS PLACED INSIDE THE UNIT, AS SHOWN IN THE ILLUSTRATION, TO WARN AGAINST FURTHER MEASURES ON THE UNIT. THE EQUIPMENT CONTAINS A LASER COMPONENT RADIATING LASER RAYS EXCEEDING THE LIMIT OF LASER PRODUCTS OF CLASS 1.

CAUTION–USE OF CONTROLS, ADJUSTMENTS OR PERFORMANCE OF PROCEDURES OTHER THAN THOSE SPECIFIED HEREIN, MAY RESULT IN HAZARDOUS RADIATION EXPOSURE.

Swedish

① PÅSKRIFTEN SITTER PÅ APPARATEM SOM VISAS SOM EN UPPMANING OM ATT APPARATEN OMFATTAR EN INBYGGD LASERKOMPONENT.

② TEXTSKYLTEN FÖR LASERN ÄR PLACERAD PÅ APPARATEN SOM EN UPPMANING OM ATT APPARATEN INNEHÅLLER EN LASERKOMPONENT.

③ VARNINGSSKYLTEN FÖR STRÅLNING HAR PLACERATS I APPARATEN, SOM BILDEN VISAR, SOM EN VARNING OM YTTERLIGARE INGREPP I APPARATEN. MATERIELEN INNEHÄLLER EN LASERKOMPONENT SOM AVGER LASER-STRÅLNING ÖVERSTIGANDE GRÄNSEN FÖR LASERKLASS 1.

VARNING–INGREPP I APPARATEN BÖR ENDAST FÖRETAS AV FACKMAN MED KUNSKAP OM ATT RISK FÖRELIGGER FÖR RADIOAKTIV ATRÅLNING.

Danish

①DETTE MÆRKAT ER ANBRAGT SOM VIST I ILLUSTRATIONEN FOR AT ADVARE BRUGEREN OM AT APPARATET INDEHOLDER EN LASERKOMPONENT.

②DETTE MÆRKAT OM LASEREN ER ANBRAGT PÅ APPARATET SOM EN OPLYSNING OM AT APPARATET INDEHOLDER ET LASERKOMPONENT.

③ADVARSELSKILTET OM STRÅLING ER PLACERET INDENI APPARATET, SOM VIST I ILLUSTRATIONEN, SOM EN ADVARSEL OM YDERLIGERE INDGREB I APPARATET. APPARATET INDEHOLDER ET LASERKOMPONENT SOM AVGIVER LASESTRÅLING DER OVERSTIGER GÆNSEVERDIEN FOR LASERKLASSE 1.

ADVARSEL! INDGREB BØR KUN FORETAGES AF EN FAGMAND DA DER ER RISIKO FOR RADIOAKTIV STRÅLING.

Finnish

③"VAROITUS! LAITE SISÄLTÄÄ LASERDIODIN, JOKA LÄHETTÄÄ (NÄKYMÄTÖNTÄ) SILMILLE VAARALLISTA LASERSÄTEILYÄ:"

www.manualscenter.com

INTERLOCK OPERATION

The Digital Compact Disc Player reads the disc signals by laser beam detection. It must be avoided for the human body to be directly exposed to the laser beam. Human eyes are especially badly affected by the laser beam. This unit is therefore equipped with an interlock to prevent the unnecessary laser output.

The laser outputs are controlled by the injection or cutoff of the constant voltage source to the laser diode at Pin 29 (LS) of IC401. (MSM6404A), and also by Automatic Laser Power Control Circuit. When Pin 29 is in "H" (High) level, the laser emits the beam. When Pin 29 is in "L" (Low) level, the laser does not emit the beam.
Pin 29 is set in "H" level when the unit is loaded with the disc and it reads the index signals or when the unit is set in the play mode after that. When the unit reads the index signals and the following two conditions are met, the laser emits the beam.

1) When the Loading Limit Switch (SW101) is set to "CL" side. (The disc tray is closed.)
2) The pickup is located at the area of minimum internal circumference.

After the above conditions are met and the index signals have been read, the laser emits the beam when the following two conditions are met.

1) when the PLAY key (SW404) is pressed.
2) when the PLAY display is ON.

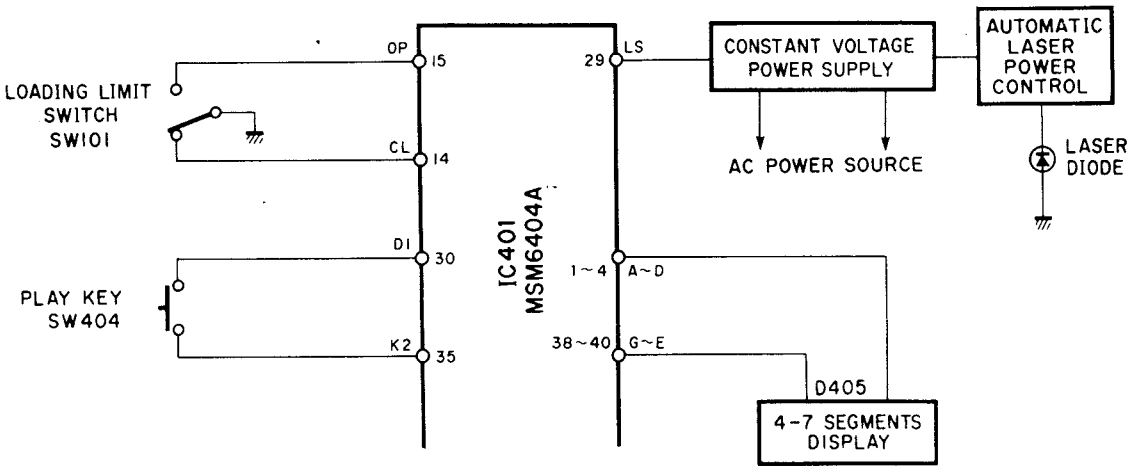

SPECIFICATIONS

Format	Compact disc digital audio system
AUDIO SECTION	
Frequency response	5 Hz –20 kHz +0.5/–1.0 dB
Harmonic distortion (20Hz – 20 kHz)	Less than 0.003% (1 kHz) (IEC-A-network)
Harmonic distortion + noise (20Hz – 20 kHz)	Less than 0.005% (1 kHz) (IEC-A-network)
S/N ratio	
IEC FLAT	98 dB
IEC A	100 dB
Dynamic range	Better than 95 dB
Wow & Flutter	Unmeasurable
Channel separation	Better than 90 dB (1 kHz)
Output voltage/impedance	2V/1 k ohm (at full scale : 0 dB)
Headphone output	0.16V
(Headphone: 8 ohms)	(at –20 dB)
INTERNAL SYSTEMS	
Optical pick-up	3-beam laser
Error correction system	CIRC dual error correction system
D/A conversion	16 bit linear
Filter	Digital filter + third order active filter

FUNCTIONS	
Music search	"+" and "–" keys ordered program search
Index search	Search key (STOP mode only)
Fast forward/rewind	Dual speed automatic switching
Total music time display	DISPLAY key
Program function	9 selections, random
Space play	Space of more than 3 seconds during program playback
Repeat	Repeat of all selections or all program selections
Disc loading	Motor driven, horizontal loading
GENERAL	
Power requirements	
U.S. & Canadian Models	120V AC, 60Hz
European & Australian Models	240V · 220V AC, 50Hz
General Model	110V ~ 130V/220V ~ 240V AC, 50/60Hz
Power consumption	20 W
Dimensions (W x H x D)	340 x 92 x 290 mm (13-3/8 x 3-5/8 x 11-7/16")
Weight	3.5 kg (7 lbs 11 oz.)
Accessories	Pin plug cord

** Specifications subject to change without notice.*

www.manualscenter.com

REAR PANELS

U.S.A. & Canadian models

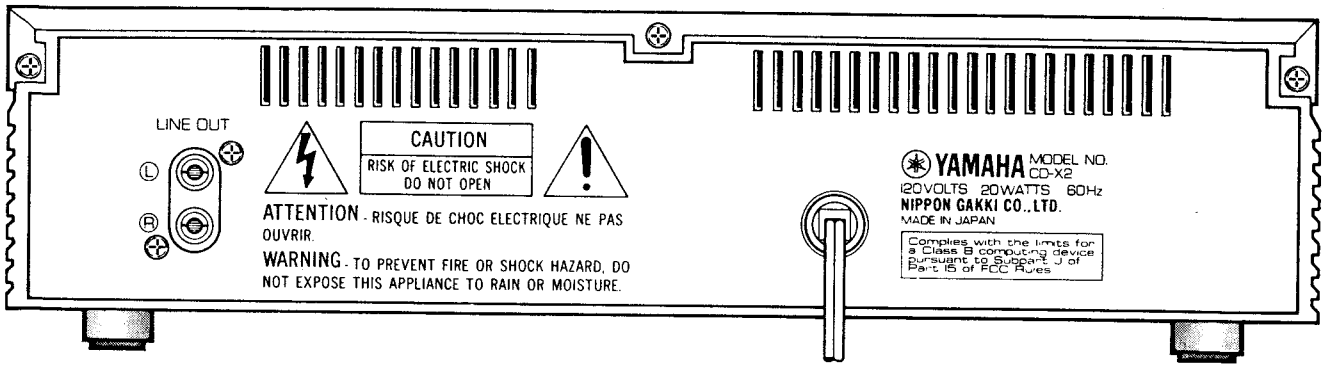

Australian model

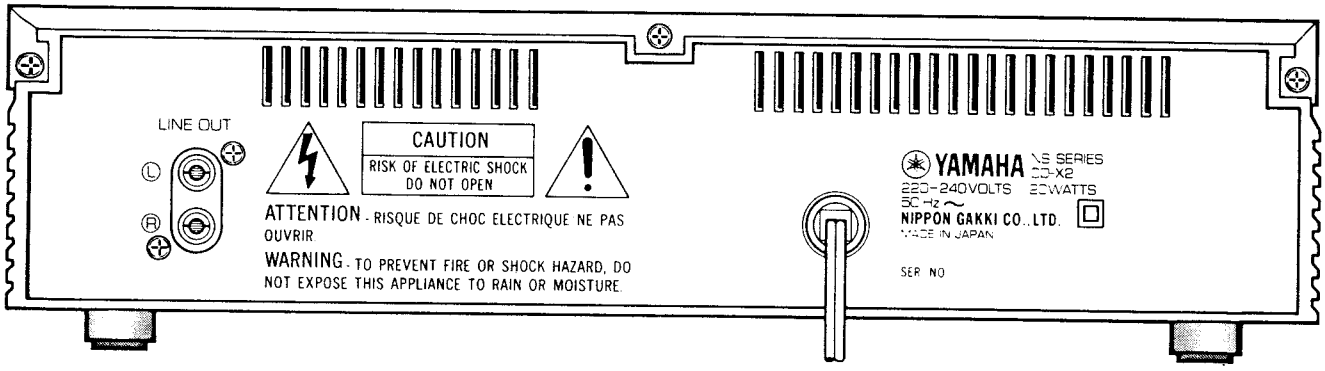

www.manualscenter.com

General model

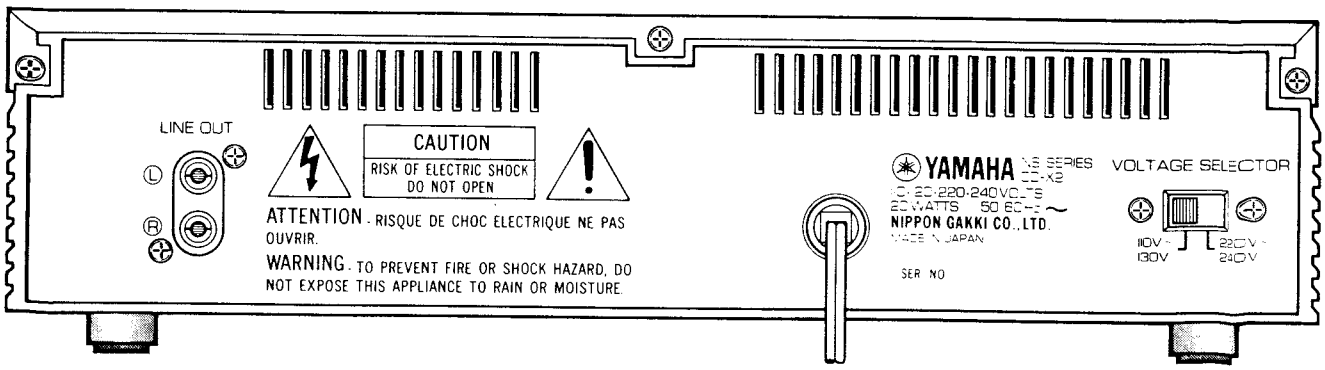

INTERNAL VIEW

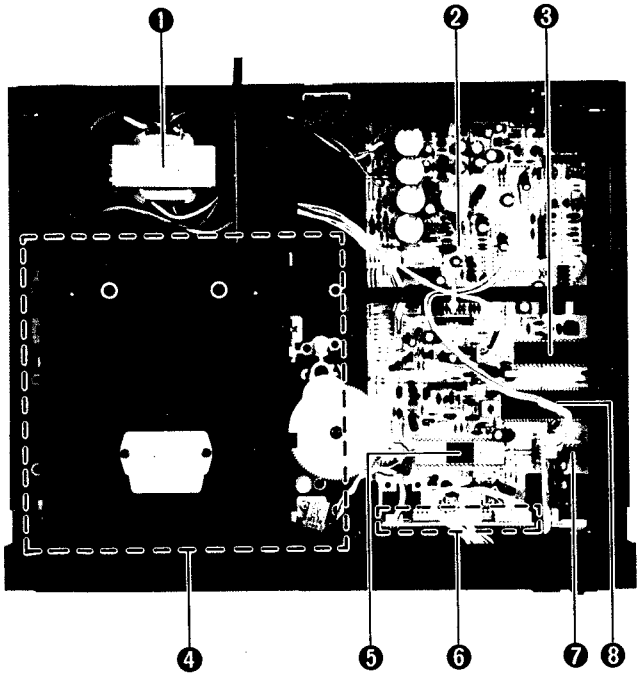

❶ POWER TRANSFORMER
U.S.A. & Canadian models: GA67080
General model: GA67070
Australian & European models: GA67091
❷ MAIN CIRCUIT BOARD
❸ D/A CONVERTER IC: PCM53JP-V or YM4006
❹ DISC MECHANISM UNIT
❺ SVC LSI: YM3531
❻ μ-COM IC: M6404A-74RS
❼ 16K bit SRAM IC
❽ SGP LSI: YM2201K

DISASSEMBLY PROCEDURES (Remove parts in disassembly order as numbered)

1. Removal of Top Cover

a. Remove 3 screws (①) in fig. 1, and slide the Top Cover to the back side.

2. Removal of Front Panel

a. Remove the phones level knob in fig.1.

b. Remove 6 screws (②) in Fig. 1, and pull the Front Panel forward.

3. Removal of Bottom Cover

a. Remove 9 screws (③) in fig. 1.

www.manualscenter.com

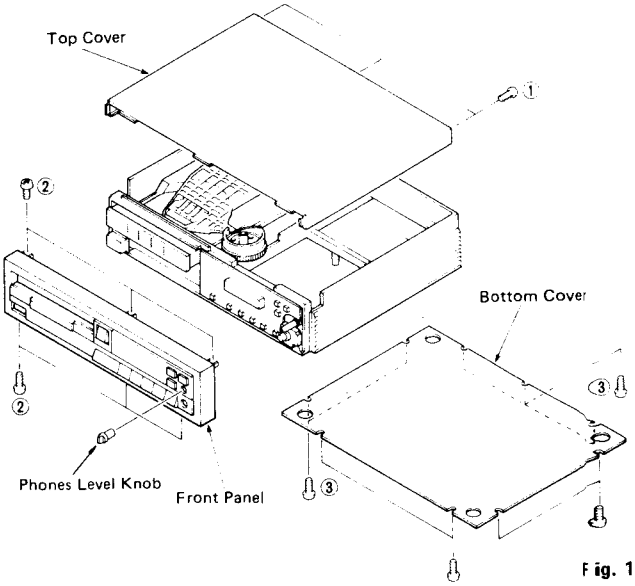

Fig. 1

4. Removal of DISC Tray Ass'y

a. Lift Flapper as shown in fig. 2, and pull Disc Tray Ass'y forward.
Then pull off Disc Tray Ass'y by pressing the hook Ⓐ in fig. 3. Now, the azimuth can be adjusted.

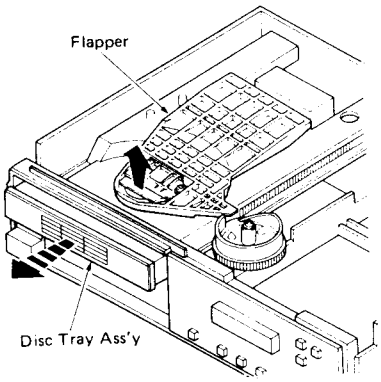

Fig. 2

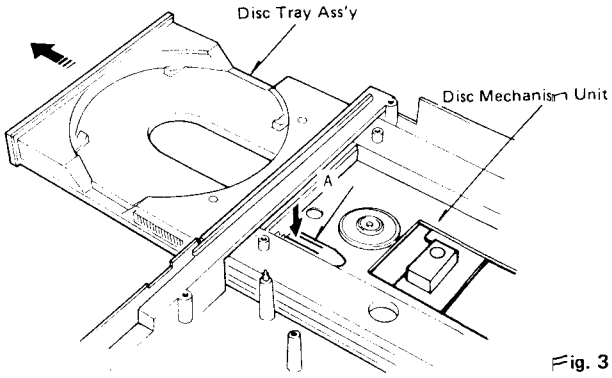

Fig. 3

5. Removal of DISC Mechanism Unit

a. Remove 4 screws (④) in fig. 4.

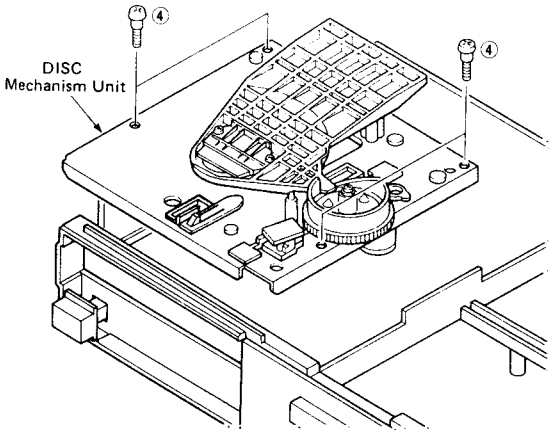

Fig. 4

6. Removal of Flapper

a. Loosen screw (⑤) fixing Flapper in fig. 5 and then remove the Flapper.

7. Removal of Cam

a. Remove screw (⑥) in fig. 5 and then pull up the Cam.

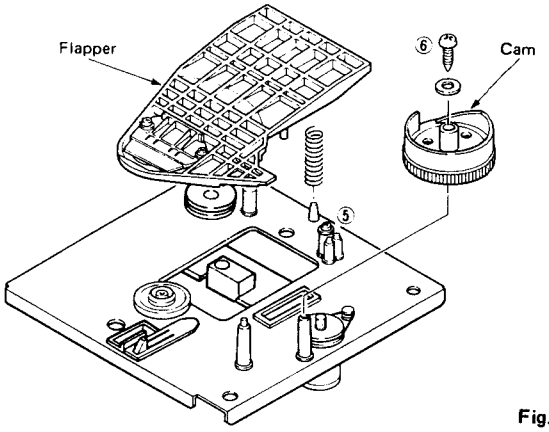

Fig. 5

www.manualscenter.com

■ ADJUSTMENTS

• Necessary items

Measuring instruments

Oscilloscope : x 2
(At least one shall have a bandwidth of 50 MHz or more)
Audio frequency oscillator (A.F.OSC): x 1
Laser power meter : x 1
(LEADER LPM-8000 or equivalent)
AC voltmeter (ACVM) : x 1
(One dual channel or two single channel meters)
DC voltmeter (DCVM) : x 1
Frequency counter (FC) : x 1

Jigs

Filter (See Fig. A) : x 1
Shorting cord (w/switch) : x 1 (Step 13, P19)
MLP-2 Special tool (P/N TX900670) : x 1 (Step 3, P11)

Tools

Screwdriver : x 1
(For Pre-Set Potentiometer adjustment)
Core screwdriver : x 1 (Step 13)

• Precautions or Special Notes

1. Measure the output level at the output terminal of the AF oscillator.
2. #○ : Cord/connector numbers
3. Special tool (P/N TX900670) is necessary in Step 3 "Diffraction Grating Adjustment".
4. The [HS] terminal used for the measurement in Step 3, 4, 5 and 7 is not at connector #1 but the emitter of TR204 or (+) lead of C210.
5. When the unit does not have VR104 (TRACKING GAIN), install it.
6. When disc tray has been removed from the disc set, make sure the position of the loading cam and the leaf switch are correct.
7. CD-X2 should always be in horizontal position while performing adjustments.

• Adjustment jig (with internal filter)

Connect the filter in Fig. A before measurement.

www.manualscenter.com

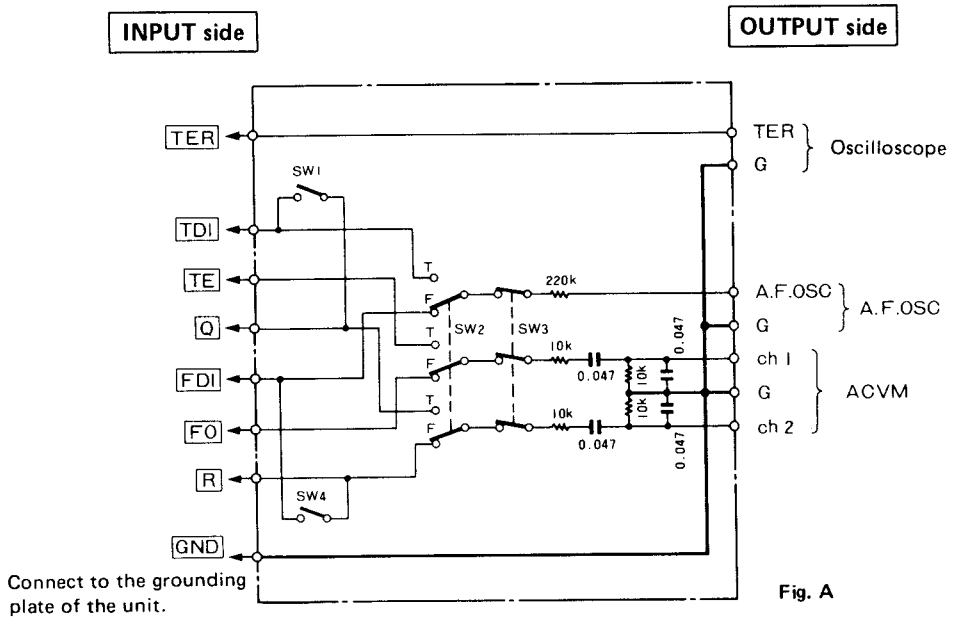

Fig. A

SW1: For diffraction grating and EF balance adjustments
SW2: FOCUS gain and TRACKING gain switching
SW3: BPF ON/OFF switch
SW4: For laser output confirmation

• Adjustment wiring diagram/test points

(Before adjustment, solder input leads of filter to test points indicated.)

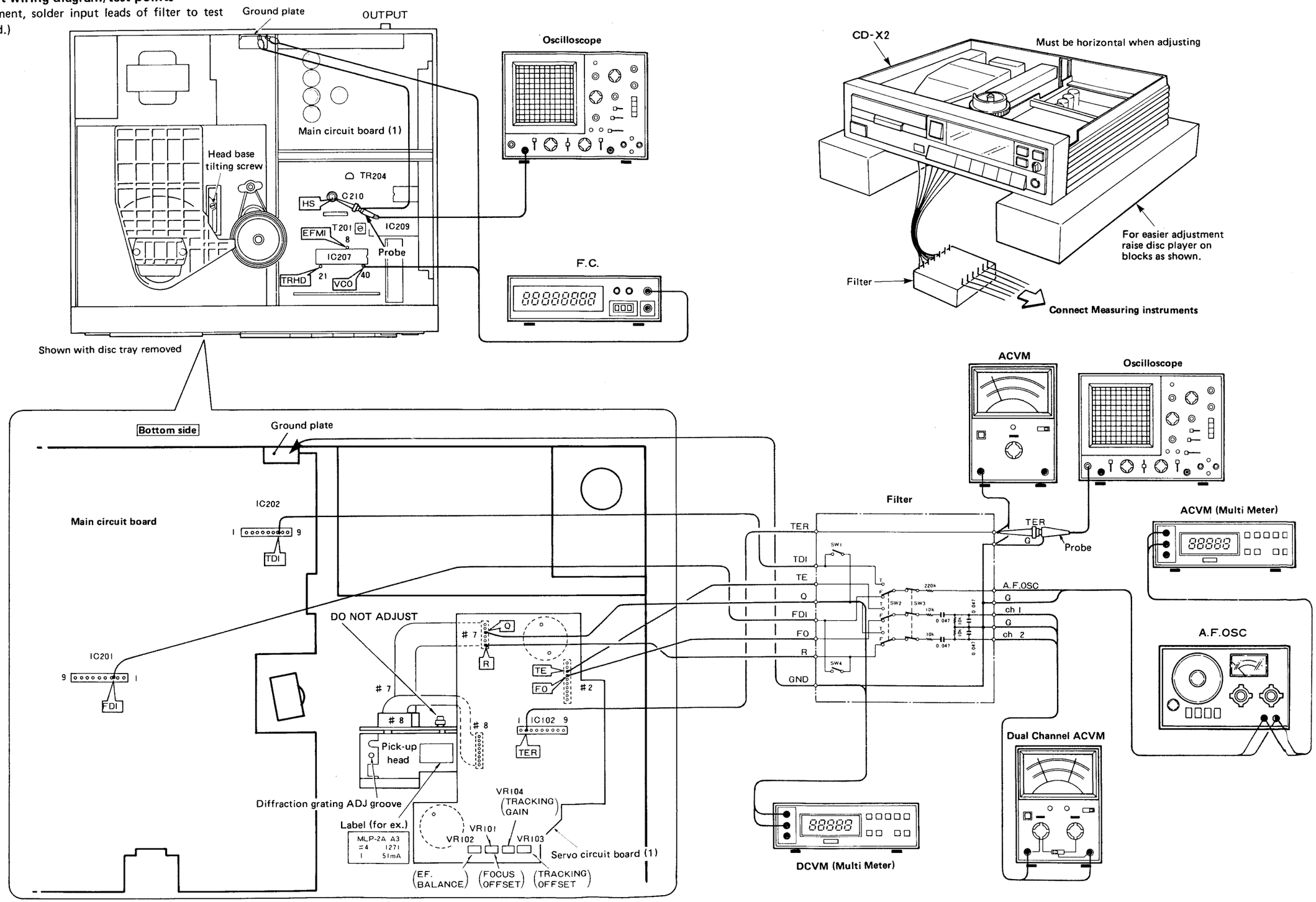

www.manualscenter.com

Confirmation of Laser Output (Step 1)

① Connect the filter as shown in Fig. B.
② Do not load the disc.
③ Remove the disc tray.
④ Remove the flapper.
⑤ Set SW4 in the filter to OFF (OPEN).
⑥ Press POWER key. (POWER ON)
⑦ Apply the laser power meter's sensor to the pick-up head's as shown in Fig. C.
⑧ After confirming that loading cam position is correct, press OPEN/CLOSE key for CLOSE operation.
⑨ Set SW4 in the filter to ON (SHORT).
(Short-circuit [FDI] terminal (IC202, 3 pin) and [R] terminal (Servo PCB #7): Focus actuator operation defeated)
⑩ Measure the laser output during the 5 seconds of FOCUS search mode.

Rating: Laser output = 0.24 mW to 0.3 mW

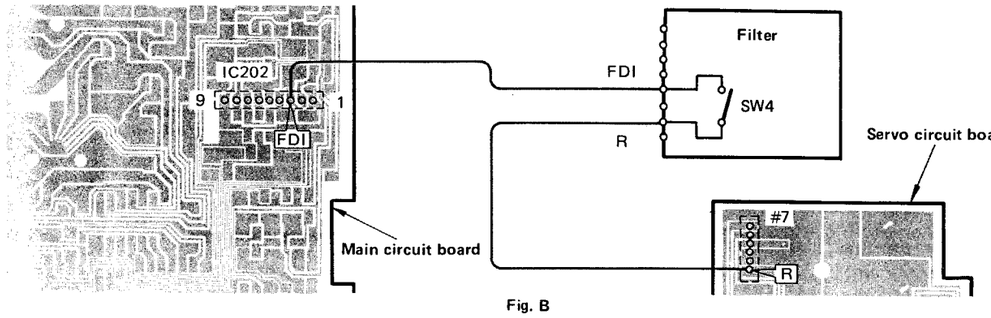

Fig. B

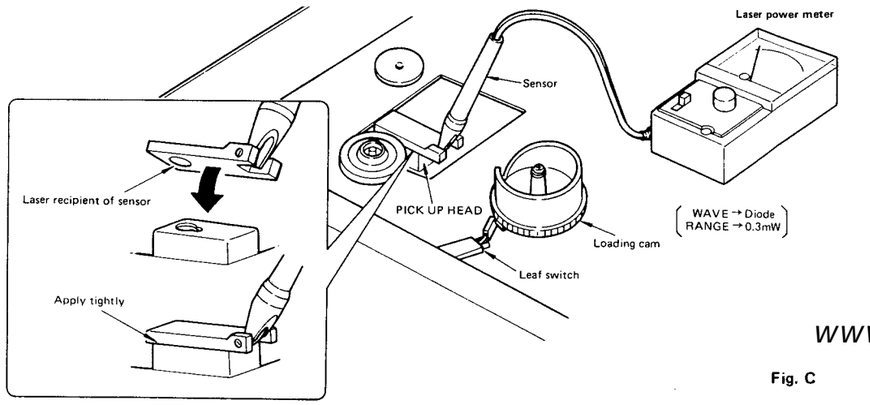

Fig. C

- **Measurement with the pick-up head alone**

① Apply −9V ± 0.5V from a DC power supply to the LB terminal, G is ground terminal of the pick-up head.
② Apply the laser power meter's sensor to the pick-up head and measure the laser output.

Rating: Laser output = 0.24 mW to 0.3 mW

Precautions in handling pick-up head

(1) No soldering necessary for CD-X2.
(2) Since laser light is near-infrared, visual confirmation is difficult. While the light is emitted, for safety make sure the eyes are at least 30 cm away from the objective lens.
(3) Do not disassemble it.
(4) Do not drop or apply shock to it.
(5) Do not leave it under high temperature or humidity.
(6) Do not touch the objective lens. Should the lens be dirty, clean using lens cleaner for cameras.

www.manualscenter.com

Confirmation of Focus Actuator Operation (Step 2)

Oscilloscope (1) settings

- DC coupling
- 1V/div range (Vertical)
  (0.1V/div when 10:1 probe is used)
- 0.5 sec/div or 1 msec/div time (Horizontal)

① Do not load a disc.
② Connect the oscilloscope (1) to [R] and [GND] terminals on the input side of the filter which is connected to the Servo PCB (#7).
③ Press POWER key. (POWER ON)
④ After confirming that loading cam position is correct press OPEN/CLOSE key for CLOSE operation.
⑤ During 5 seconds of FOCUS search, confirm that the waveform is as shown in Fig. D.
⑥ Confirm that the pick-up head's objective lens moves smoothly between the lowest and highest points.

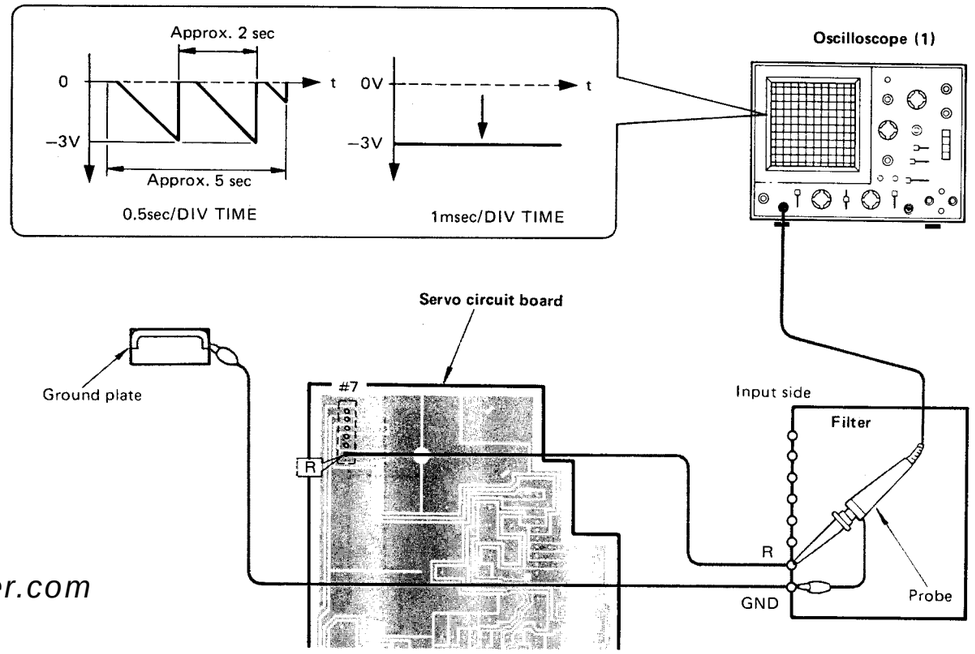

Fig. D

Adjustment of Diffraction Grating (Step 3)

* This adjustment requires use of 2 oscilloscopes.

* Power should not be turned OFF during steps ② through ⑨.

Oscilloscope (1) setting conditions

- DC coupling
- 0.1V/div range (Vertical)
  (10 mV/div when 10:1 probe is used)
- 5 to 20 msec/div time (Horizontal)

Oscilloscope (2) setting conditions

- AC coupling
- 0.5 V/div range (Vertical)
  (50 mV/div when 10:1 probe is used)
- 0.2 ~ 0.5 μsec/div time (Horizontal)

① Connect the filter and measuring instruments, as shown in Fig. E.
   1) Connect oscilloscope (1) to the Servo PCB [TER] terminal (IC102, 2 pin).
   2) Connect oscilloscope (2) to the [HS] terminal (+ lead of C210).
② Press POWER key. (POWER ON)
③ Load a disc. (Have lead-in data read.)
④ Press PLAY key then Pause.
⑤ Set SW1 in the filter to ON.
   (Short-circuit [TDI] terminal (IC202, 3 pin) and [Q] terminal (Servo PCB #7): TRACKING SERVO to open)
⑥ Observe waveform on oscilloscope (1).
⑦ Using the special tool (P/N TX900670) adjust diffraction grating for maximum signal amplitudate [TER] by oscilloscope (1).
   Rating: $E_{TER} \geqq 280$ mVp-p
   * When disc has stopped rotating, press PLAY key again and make adjustment.
⑧ Set SW1 of the filter to OFF.
   (Open the [TDI] and [Q] terminals: TRACKING SERVO → closed)
⑨ Confirm that [HS] (eye-pattern) signal appears on oscilloscope (2).
   * Set to the point where [TER] signal amplitude is maximum and [HS] (eye-pattern) signal can be observed finely and clearly.
   * Oscilloscope (2), should have frequency response of 50 MHz or greater.

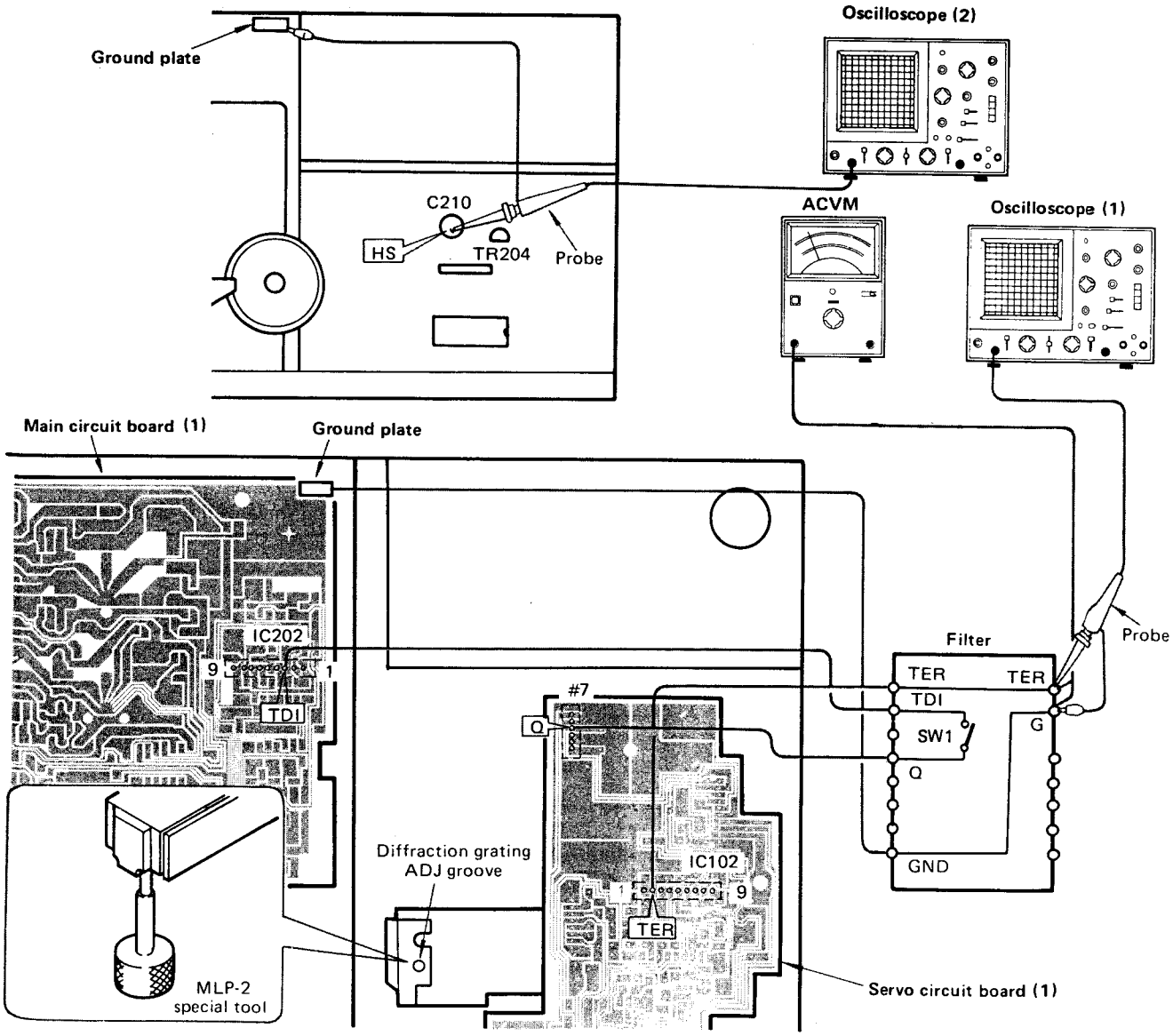

Fig. E

www.manualscenter.com

Oscilloscope (1)

Good waveform

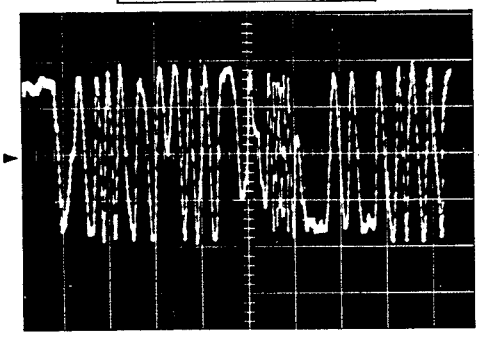

TER signal amplitude in this state is 400mVp-p.

No good waveform

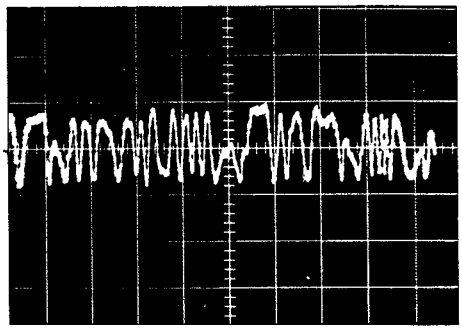

TER signal amplitude in this state is 170mVp-p.

Oscilloscope (2)

Eye pattern

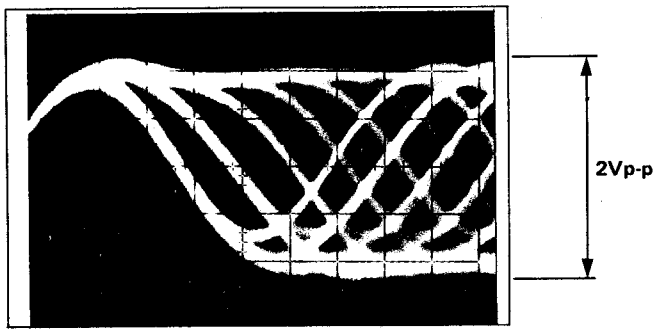

0.2μsec/div time

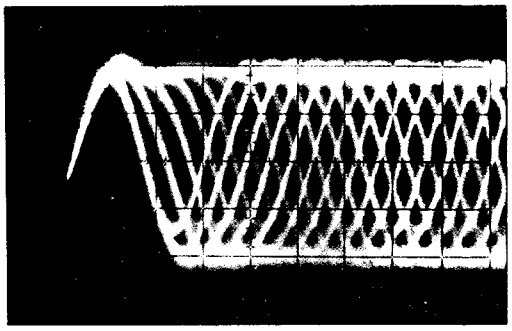

0.5μsec/div time

Waveforms 3T – 11T.

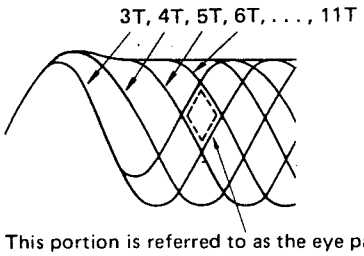

This portion is referred to as the eye pattern.

The abnormal eye pattern has less distinct lines and smaller amplitude than that to the good waveform.

Good waveform

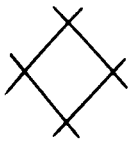

Abnormal waveform

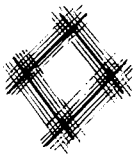

Adjust so that the good waveform is obtained.

Special tool for MLP-2

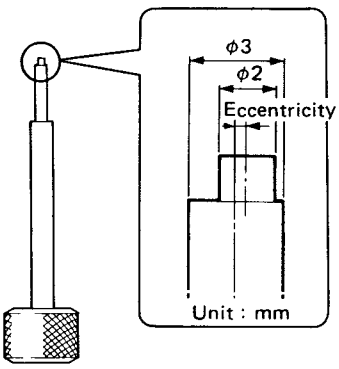

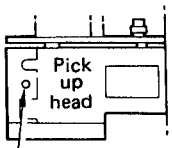

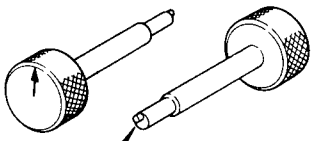

Apply arrow mark in the direction of the boss as shown in the left-hand figure.

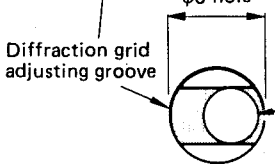

Insert the tip of the special tool into the groove and turn the tool to adjust the diffraction grid.

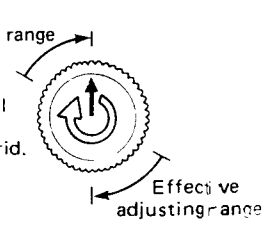

When this tool is rotated one turn (360°), the pick-up head diffraction grid can be adjusted within the above range. However, the pick-up head diffraction grid is roughly adjusted at the factory, do not rotate the tool excessively.
For adjustment, refer to the mark applied on the tool knob.

www.manualscenter.com

Adjustment of Jitter (Step 4)

Oscilloscope (2) Settings

- AC coupling
- 0.5 V/div range (Vertical)
  (50 mV/div when 10:1 probe is used)
- 0.2 ~ 0.5 μsec/div time (Horizontal)

① Remove the disc tray.
② Connect oscilloscope (2) to HS terminal (+ lead of C210), as shown in Fig. F.
③ Press POWER key. (POWER ON)
④ Load the specified disc (35DH5 or Philips test disc).
⑤ Confirm that the loading cam position is correct and press OPEN/CLOSE key for CLOSE operation.
⑥ Press PLAY key.
⑦ Adjust the head base tilting screw so that the HS signal (eye-pattern) waveform is distinct and clear.
* Adjust at the center of the disc.

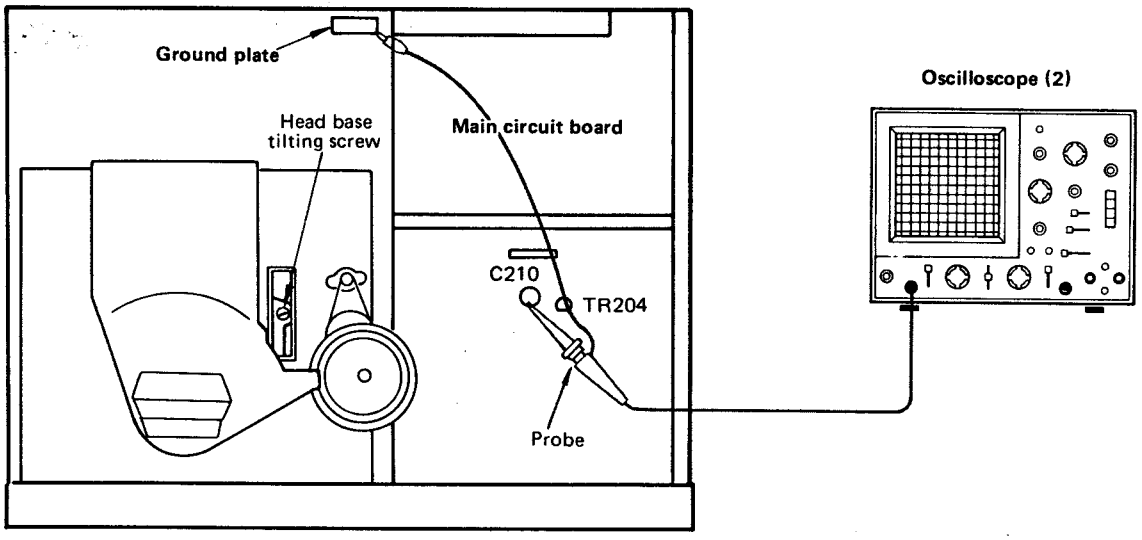

Fig. F

Adjustment of Focus Offset (Step 5)

Oscilloscope (2) settings

- AC coupling
- 0.5 V/div range (Vertical)
  (50 mV/div when 10:1 probe is used)
- 0.2 ~ 0.5 μsec/div time (Horizontal)

① Connect oscilloscope (2) to HS terminal (Same as in Step 4).
② Press POWER key. (POWER ON)
③ Load the specified disc (35DH5 or Philips test disc).
④ Press PLAY key.
⑤ Adjust VR101 (FOCUS OFFSET) so that the HS (eye-pattern) signal waveform is distinct and clear.
* Adjust at the center of the disc.

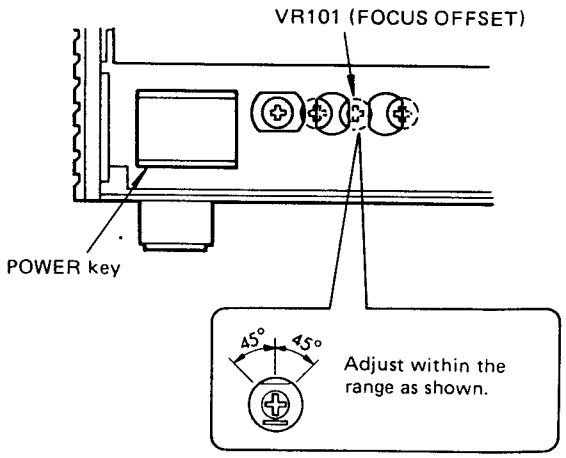

Fig. G

www.manualscenter.com

Adjustment of EF Balance (Step 6)

* Power should not be turned OFF during steps ② through ⑧ .

Oscilloscope (1) settings

- DC coupling
- 0.1 V/div range (Vertical)
  (10 mV/div when 10:1 probe is used)
- 1 to 20 msec/div time (Horizontal)

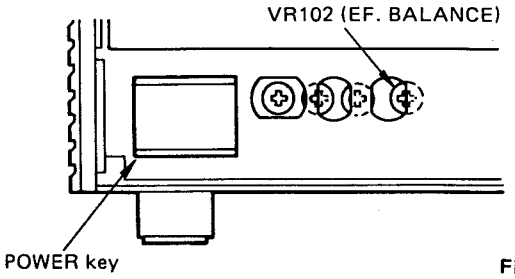

Fig. H

① Connect the filter and measuring instruments using the same method as in Step 3.
② Press POWER key. (POWER ON)
③ Load a disc. (Have lead-in data read.)
④ Press PLAY key than Pause.
⑤ Set SW1 in the filter to ON.
(Short-circuit TDI terminal (IC203, 3 pin) and Q terminal (IC203, 7 pin): TRACKING SERVO is OPEN)
⑥ Observe the waveform on oscilloscope (1).
⑦ Confirm that TER signal becomes maximum.
⑧ Adjust VR102 (EF BALANCE) so that the DC offset of the waveform at TER is DC ± 15mV.

* If the maximum TER signal point was re-adjusted in Step 6, go back to Step 3 and also carry out adjustments in Steps 4 and 5 again.

Incorrect
EF balance is off to "– side".

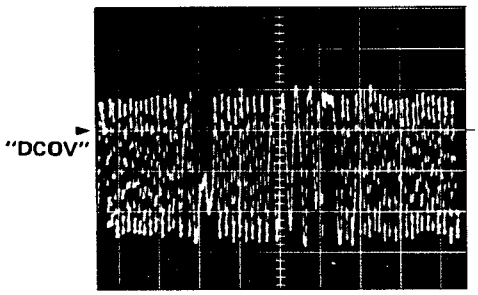

This shows –100mV DC offset.

Good
Rating DC offset → Less than ±15mV.

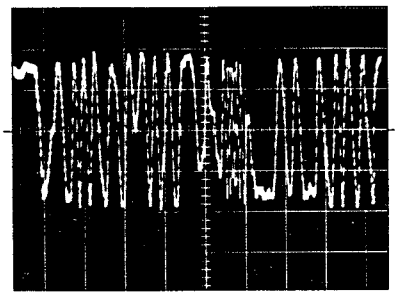

This shows DC 0V state.

Incorrect
EF balance is off to "+ side".

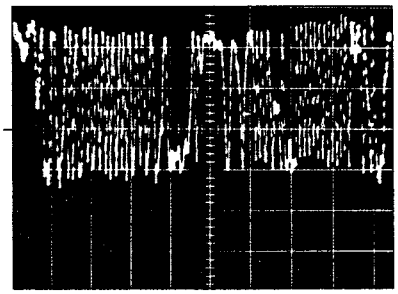

This shows +80mV DC offset.

Confirmation of HS Level (Step 7)

Oscilloscope (2) settings

- AC coupling
- 0.5 V/div range (Vertical)
  (50 mV/div when 10:1 probe is used)
- 0.2 ~ 0.5 μsec/div time (Horizontal)

www.manualscenter.com

① Connect oscilloscope (2) to HS terminal (Same as in Step 4).
② Press POWER key. (POWER ON)
③ Load a disc.
④ Press PLAY key.
⑤ Confirm that the HS level is between 1.5 Vp-p and 2.5 Vp-p.

Confirmation of Focus Gain (Step 8)
* This confirmation requires two single channel voltmeter or dual channel AC voltmeter.

① Connect the filter and measuring instruments, as shown in Fig. I.
Apply an 800 Hz, 4.5 Vrms signal from the AF oscillator to [FDI] terminal (IC201, 3 pin) via the resistor (220 kilohms) in the filter.
② Set SW3 to OFF.
③ Set SW2 to F (FOCUS).
④ Press POWER key. (POWER ON)
⑤ Load a disc.
⑥ Press PLAY key.
⑦ Set SW3 to ON.
⑧ Read the indications of the AC voltmeters (CH1: E_{FO}, CH2: E_R) and confirm that they satisfy the rating.

Rating: $E_R = E_{FO} + 30\ dB^{+3}_{-5} dB$

Example
$E_R = -28$ dB
$E_{FO} = -58$ dB

www.manualscenter.com

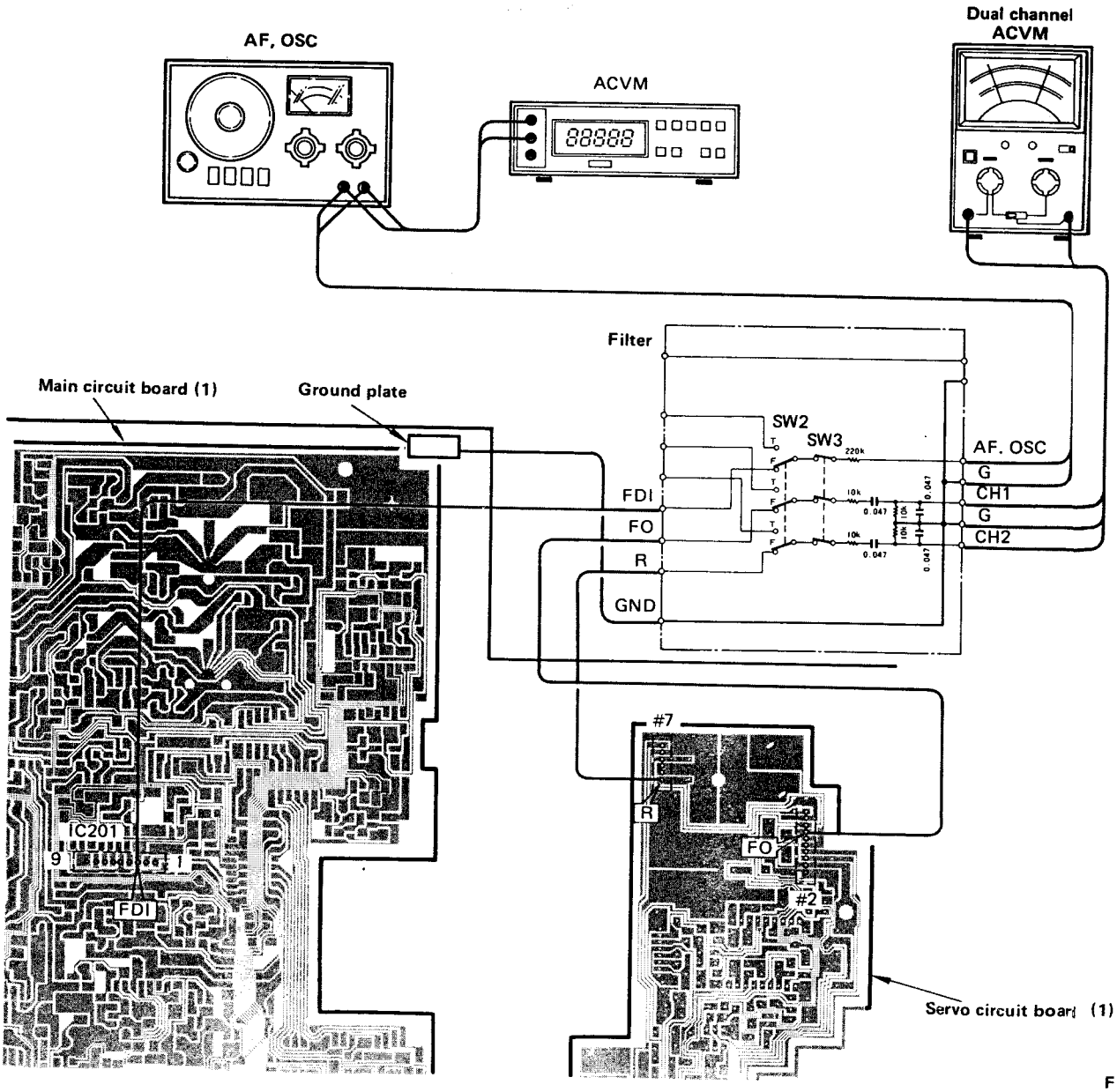

Fig. I

Adjustment of Tracking Gain (Step 9)

* This adjustment requires use of two signal channel AC voltmeter or dual channel AC voltmeter.

① Connect the filter and measuring instruments, as shown in Fig. J.
Apply a 800 Hz, 100 mVrms signal from the AF oscillator to TDI terminal (IC202, 3 pin) via the resistor (220 kilohms) in the filter.

② Set SW3 to OFF.

③ Set SW2 to T (TRACKING).

④ Press POWER key. (POWER ON)

⑤ Load a disc.

⑥ Press PLAY key.

⑦ Set SW3 to ON.

⑧ While observing the indications of the AC voltmeters (CH1: E_{TE}, CH2: E_Q), adjust VR104 (TRACKING GAIN) so that they satisfy the rating.

Rating: $E_{TE} = (E_Q + 5\text{ dB}) \pm 1\text{ dB}$

Example
$E_{TE} = -22$ dB
$E_Q = -27$ dB

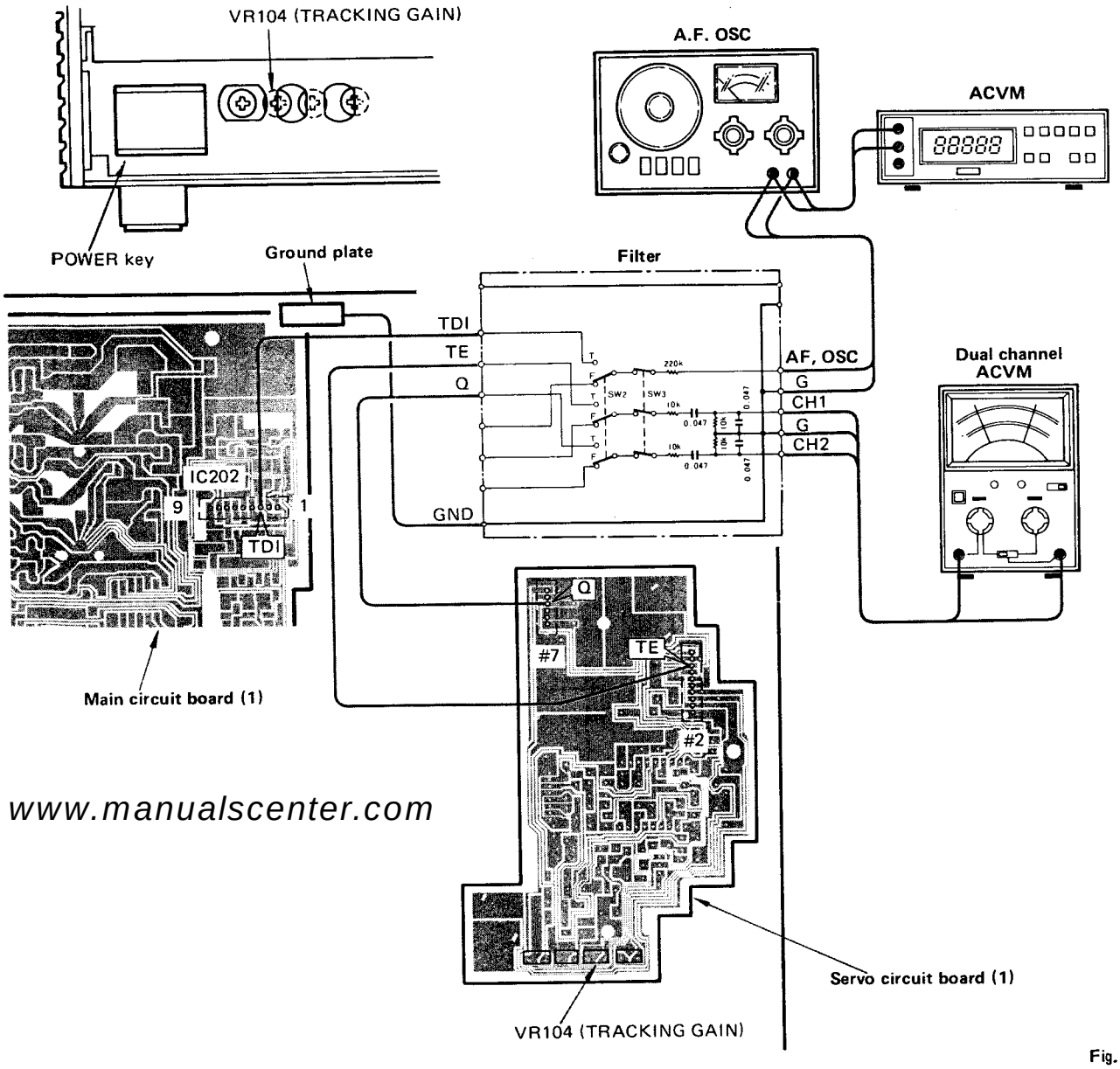

www.manualscenter.com

Fig. J

Adjustment of Tracking Offset (Step 10)

① Connect a DC voltmeter to [Q] and [GND] terminals on the Input side of the filter.
② Press POWER key.(POWER ON)
③ Load a disc.
④ Press STOP key. (STOP mode: Display "1:00")
⑤ While observing the indication (E_Q) of the DC voltmeter, adjust VR103 (TRACKING GAIN) so that it satisfies the rating.

Rating: E_Q = 0 V DC ±50 mV DC

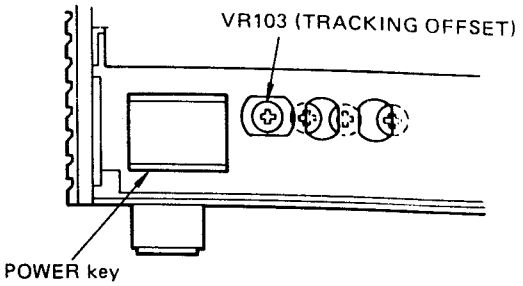

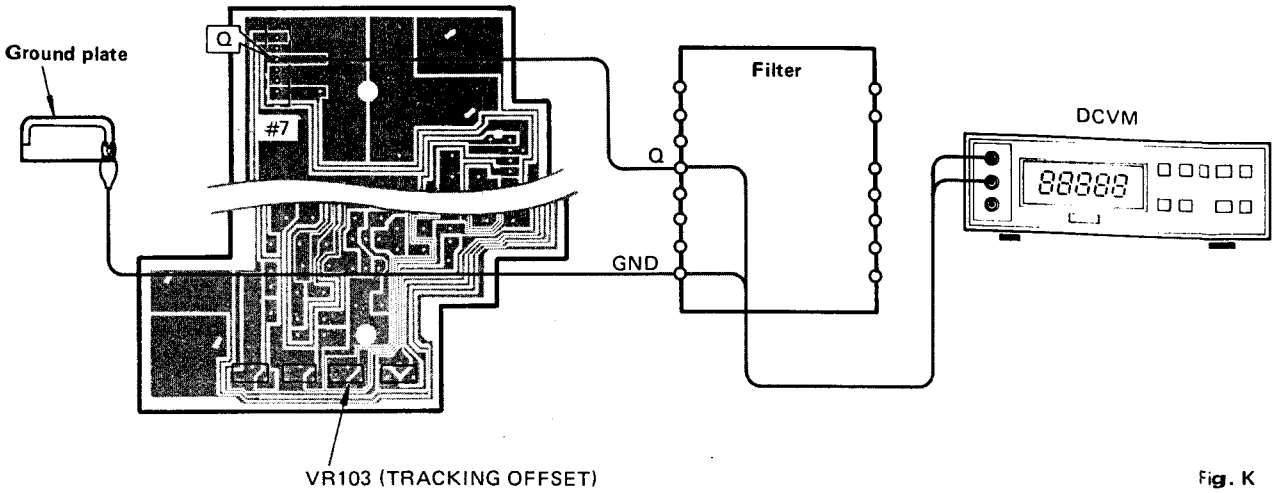

Fig. K

Confirmation of Kick Gain (Step 11)

Oscilloscope (1) (2-ch oscilloscope) Settings

- DC coupling
- CH1 → [TER] terminal (IC102, 2 pin): 0.1 V/div (Vertical) (10 mV/div when 10:1 probe is used)
- CH2 → [TRHD] terminal (IC207, 21 pin): 5 V/div (Vertical) (0.5 V/div when 10:1 probe is used)
- TRIGGER MODE: 2 CH
- 0.2 msec/div time (Horizontal)

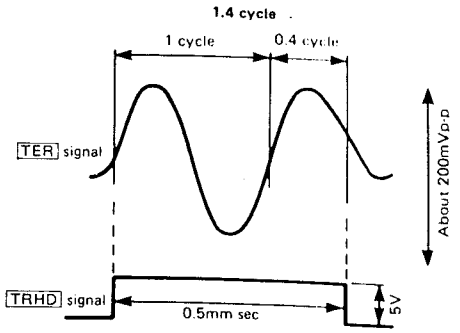

① Connect the filter and measuring instruments, as shown in Fig. L.
② Press POWER key. (POWER ON)
③ Load a disc.
④ Press PLAY key.
⑤ Observe waveform while pressing Fast Forward mode key (▶▶) for 3 seconds.
⑥ Confirm that [TER] signal cycle is between 0.7 and 2.3 when [TRHD] signal level is High.
⑦ Press Reverse mode key (◀◀) for 3 seconds and confirm that [TER] signal cycle is within the above specification but in reverse phase.

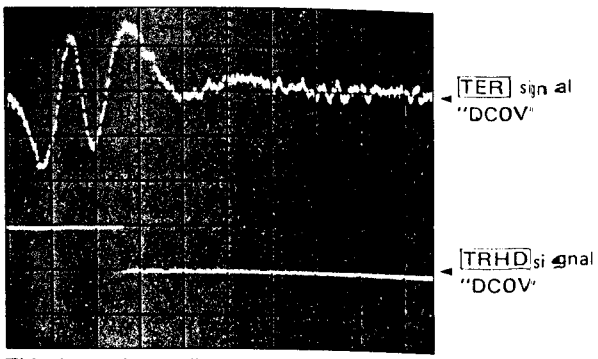

This shows about 1.7 cycle which is within specification.

www.manualscenter.com

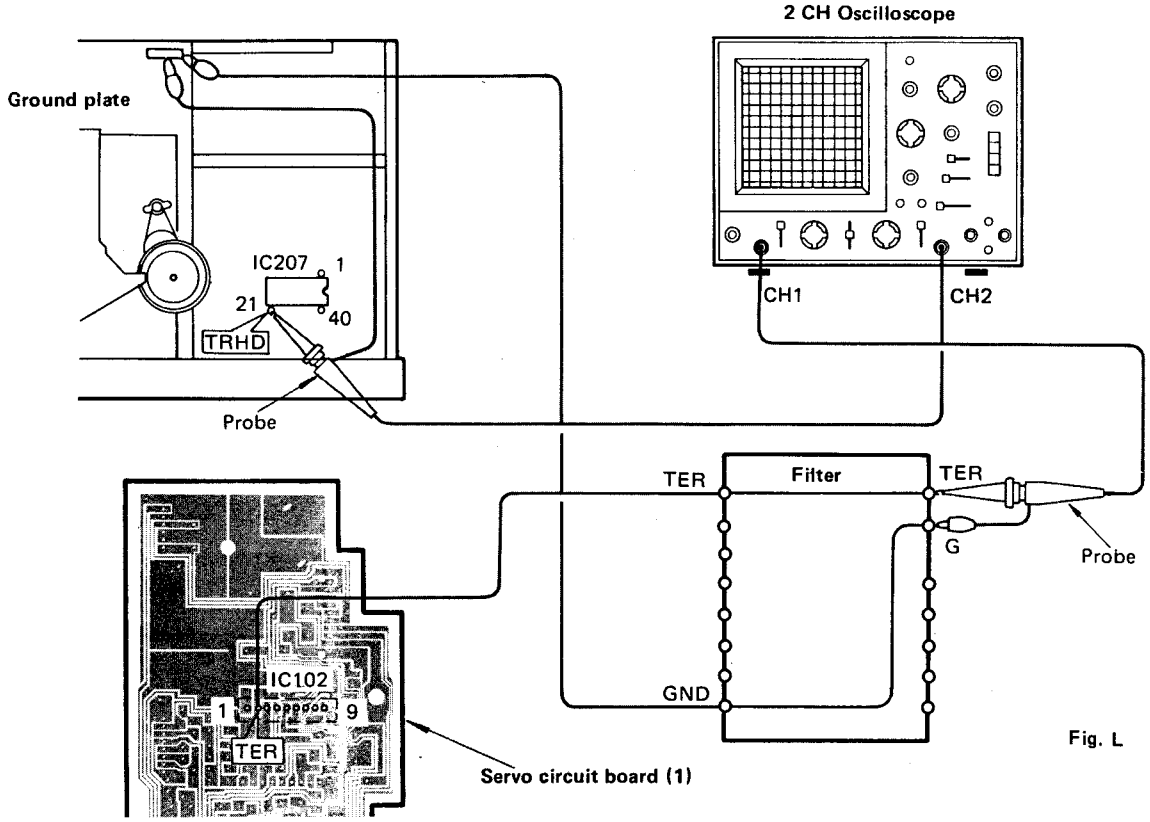

Fig. L

Confirmation of Search (◀◀ , ▶▶) Operation (Step 12)

① Load a disc and press PLAY key.
② Press Fast Forward mode key (▶▶) and confirm that the displayed time (ELAPSED TIME) advances smoothly.
③ Press Reverse mode key (◀◀) and confirm as in step ③ .

Adjustment of VCO (Step 13)

① Connect the shorting cord (with switch) and measuring instruments, as shown in Fig. M.
② Do not load a disc.
③ Press POWER key. (POWER ON)
④ Set the shorting cord's switch to ON (SHORT).
⑤ While observing the frequency counter indication (F_{VCO}), adjust T201 core so that it satisfies the rating.

Rating: F_{VCO} = 4.3218 MHz ±10 kHz

www.manualscenter.com

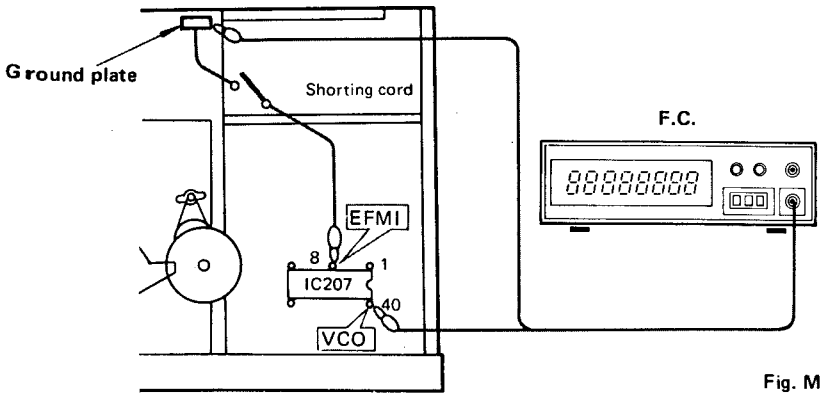

Fig. M

PRINTED CIRCUIT BOARD(Pattern side)

Note)
文字面 : Component side

www.manualscenter.com

Main Circuit Board NA087910

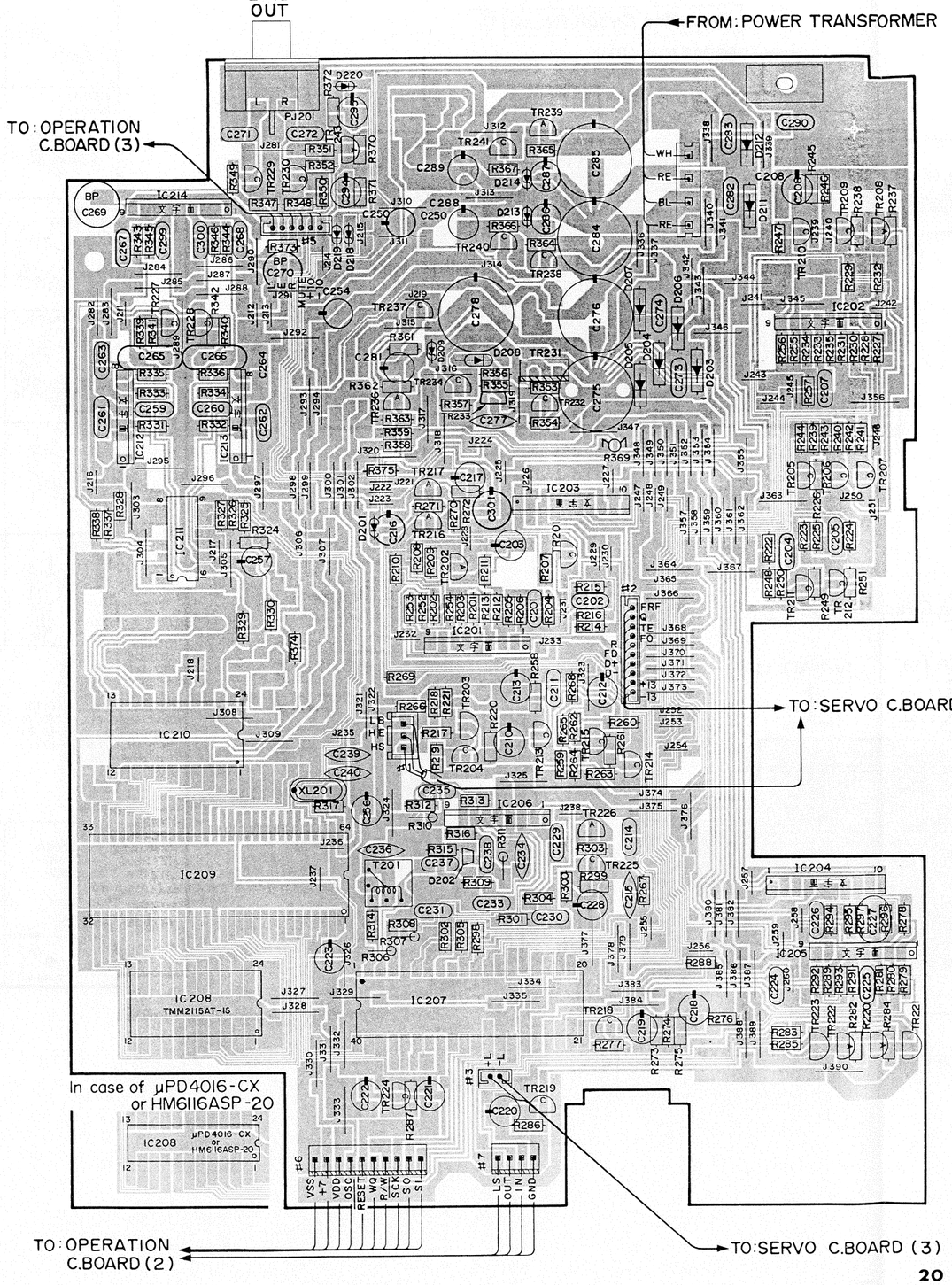

Main Circuit Board NA086070

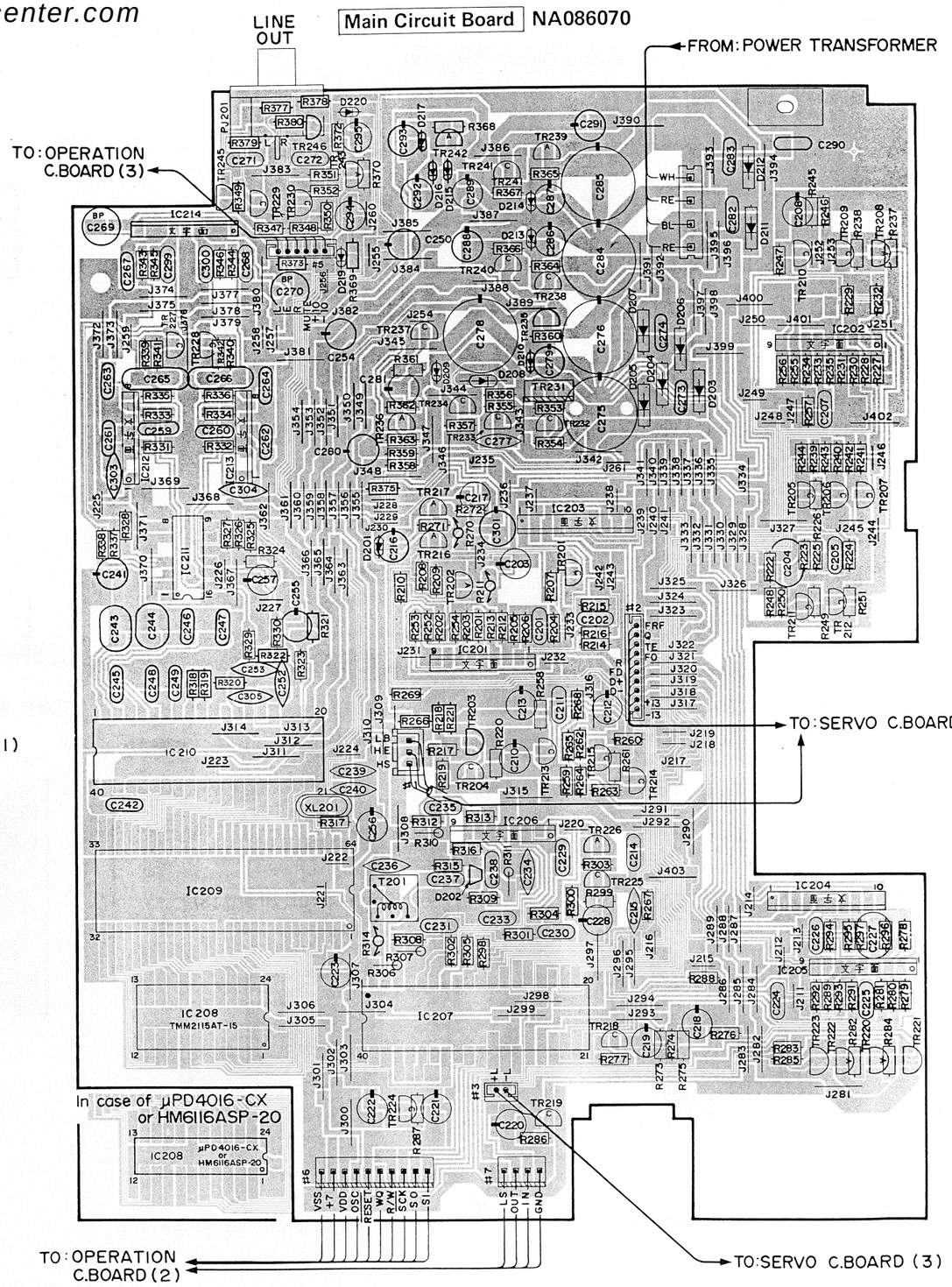

PRINTED CIRCUIT BOARD (Pattern side)

Note)
文字面：Component side

Servo Circuit Board (1)

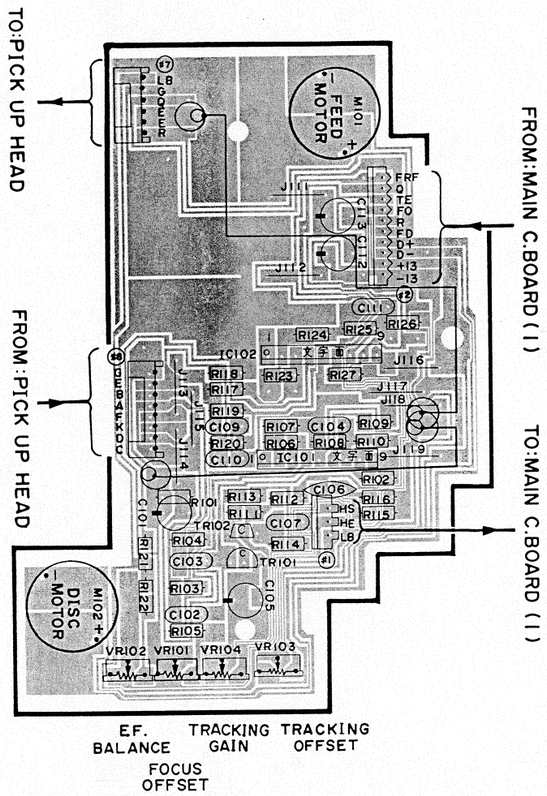

Servo Circuit Board (2)

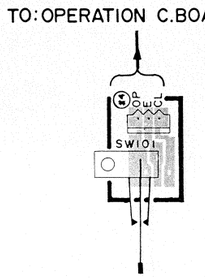

Servo Circuit Board (3)

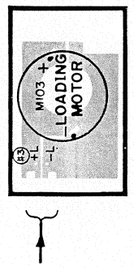

Operation Circuit Board (1)

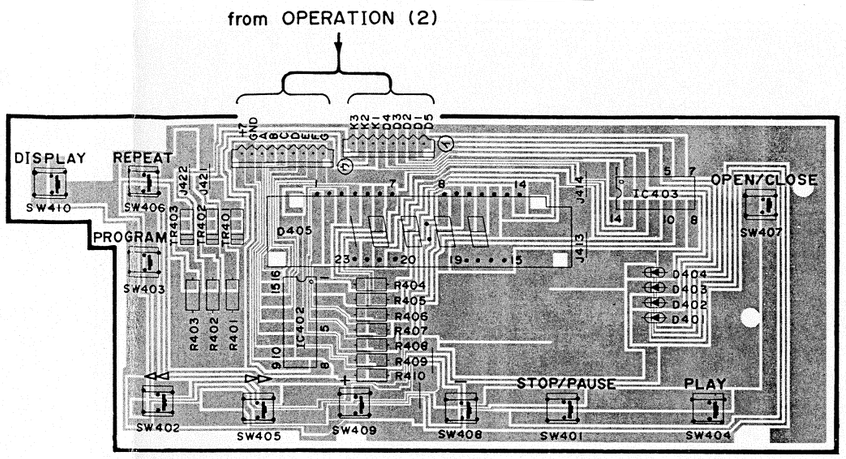

Operation Circuit Board (2)

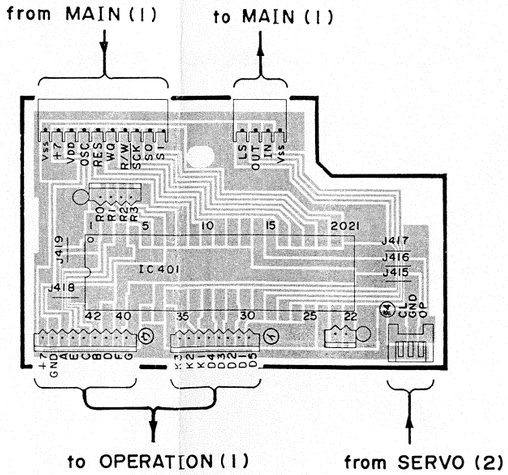

Operation Circuit Board (3)

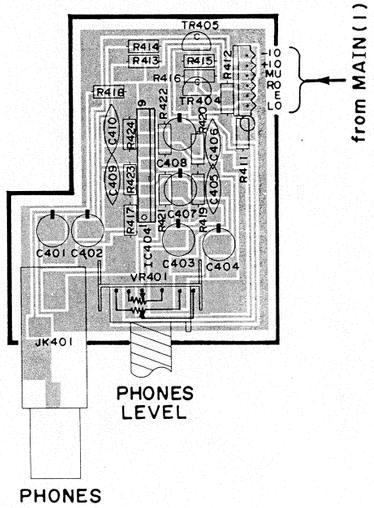

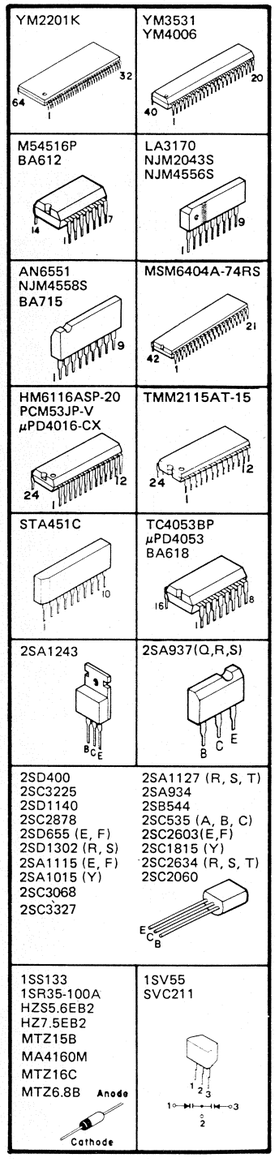

www.manualscenter.com

WIRING

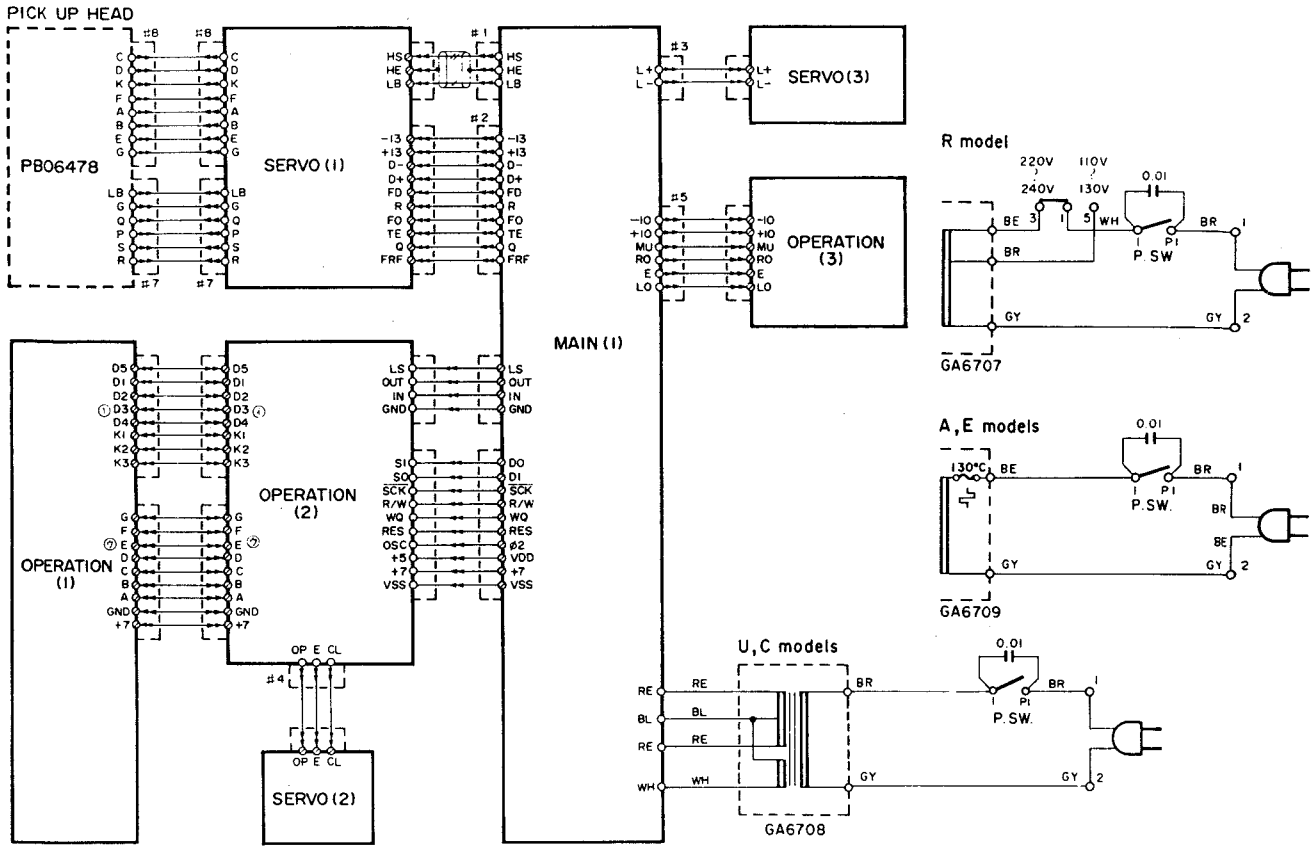

www.manualscenter.com

★ List of serial numbers corresponding to the main circuit board modifications

Main Circuit Board	Serial Numbers	
NA087910	#8401 ~ #19750	
NA086480	#24751 ~ #29400	#103501 ~ #105500
NA086070	#34401 ~	#105901 ~

* For the circuit diagram and parts list of NA086480, refer to Service Manual 004580

■ IC BLOCK

IC207: YM3531

SVC (servo controller) LSI

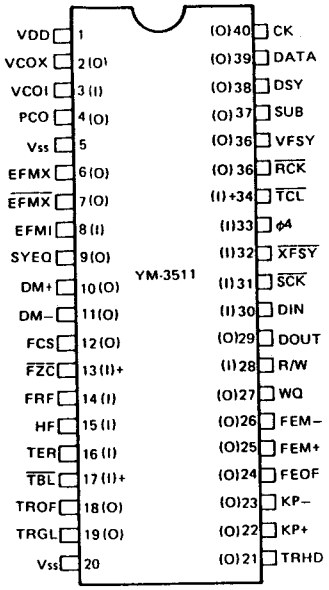

+ marked: internal pull up resistor

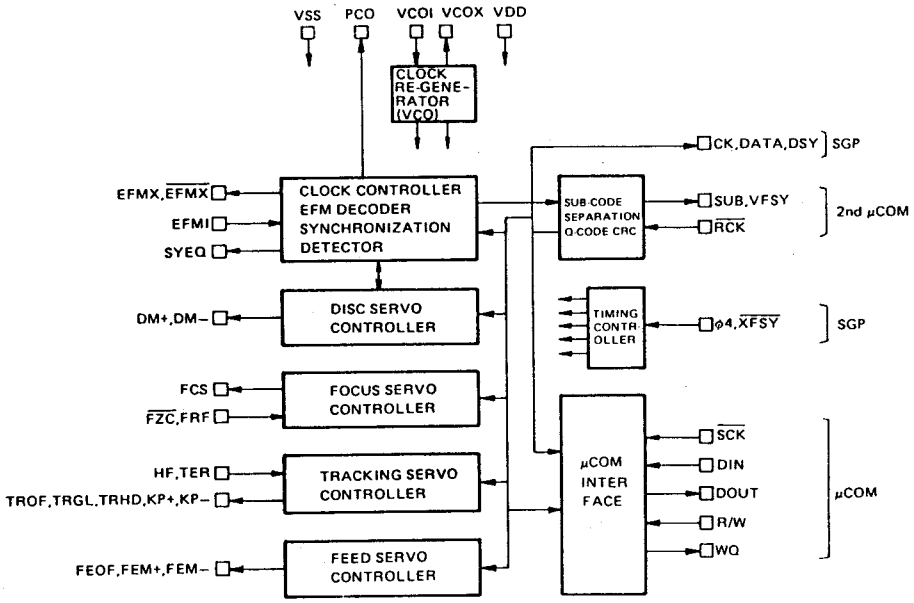

www.manualscenter.com

IC209: YM2201K

SGP (signal processor) LSI

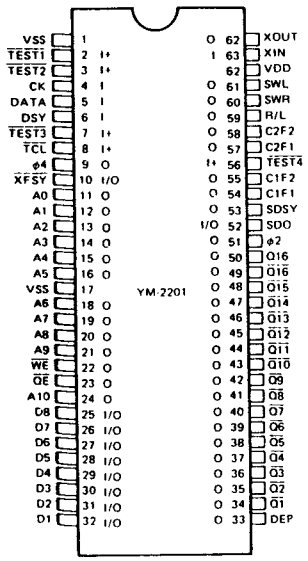

+ marked: internal pull-up resistor

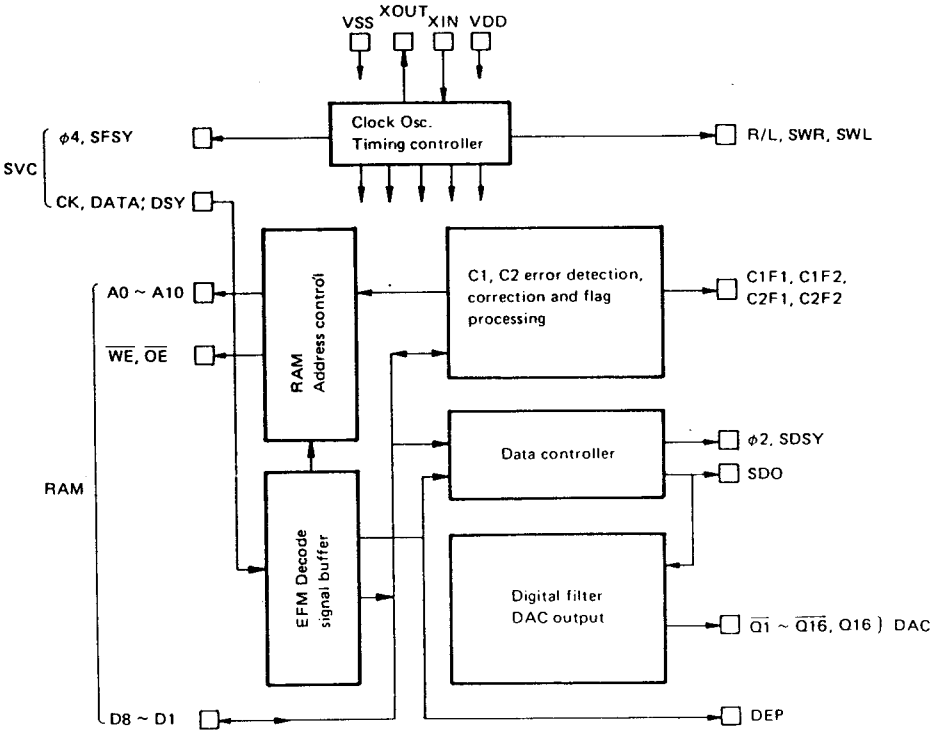

IC401: MSM6404A-74RS

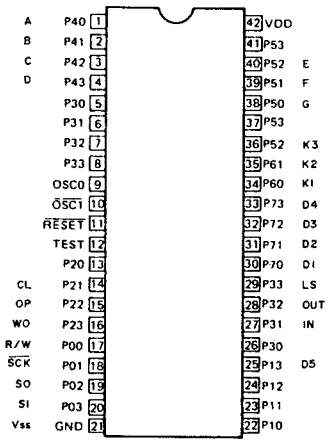

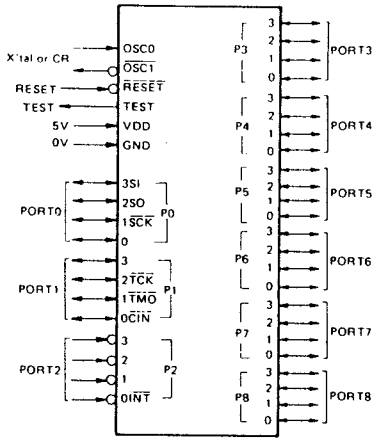

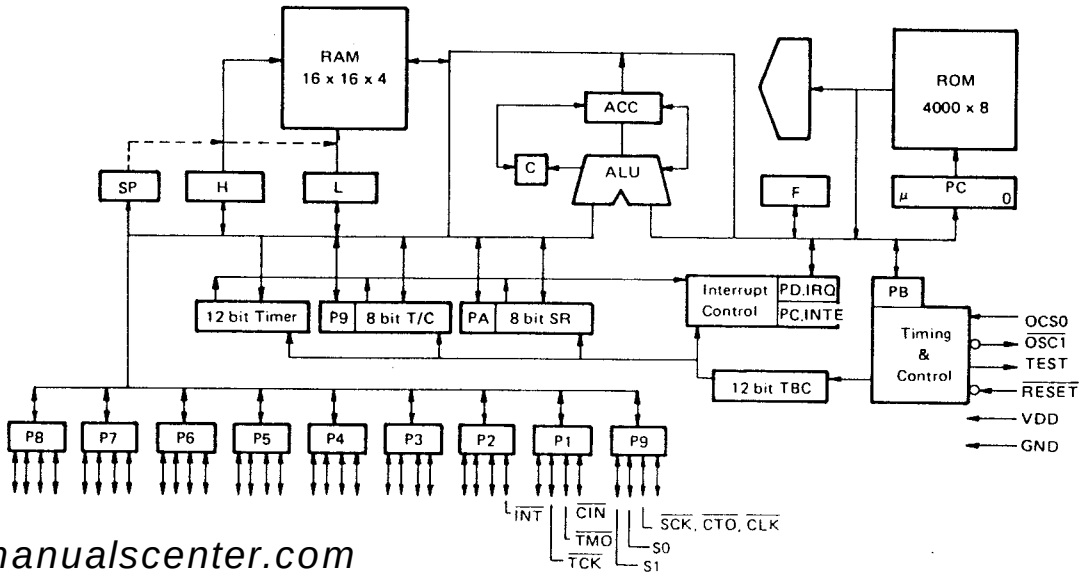

www.manualscenter.com

IC210 : PCM53JP-V
(Main Circuit Board : NA087910)

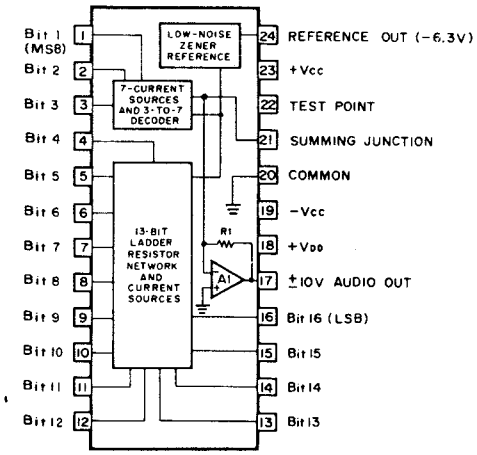

IC210 : YM4006
(Main Circuit Board : NA086070)

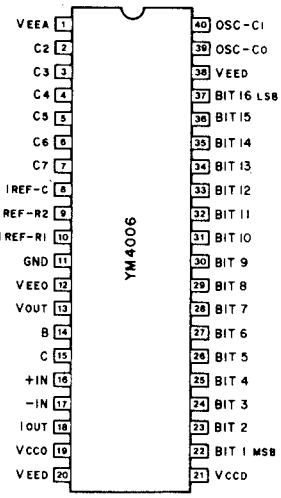

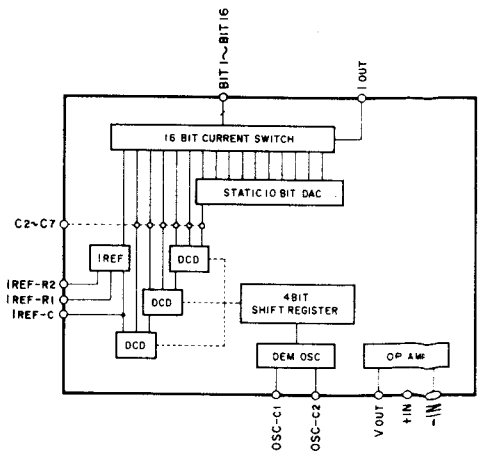

IC101,201, 202, 205, 214. AN6551 or NJM4558S or BA715
IC102, 206: NJM2043S
IC404: NJM4556S

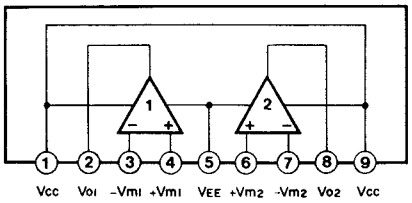

IC203, 204: STA451C

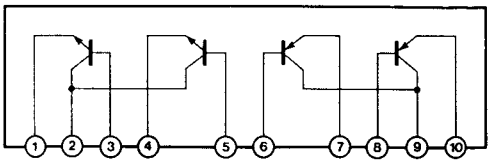

IC208: μPD4016-CX or HM6116ASP-20
or TMM2115AT-15

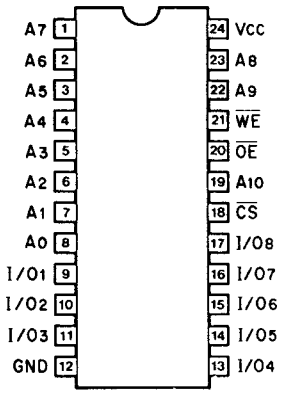

IC211: TC4053BP or μPD4053

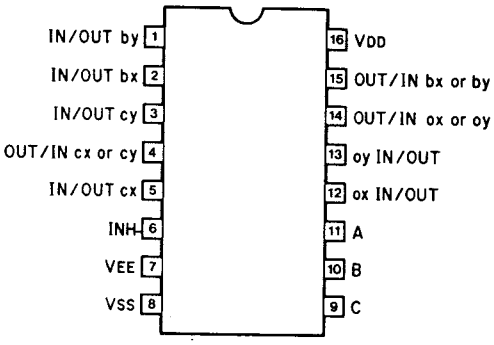

www.manualscenter.com

IC212, 213: LA3170

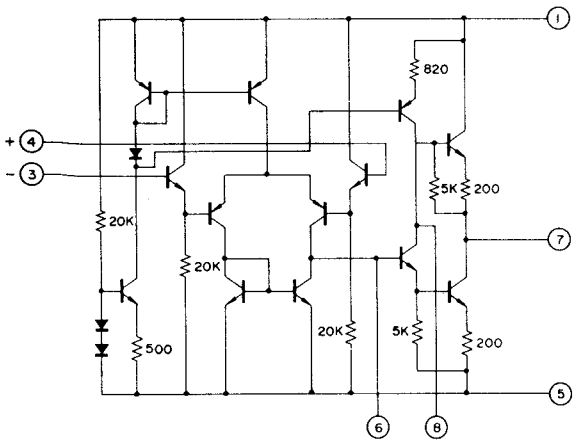

IC402: BA618

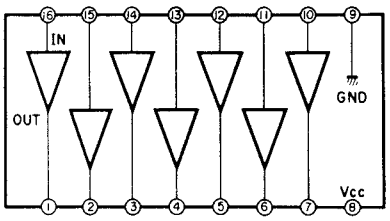

IC403: M54516P or BA612

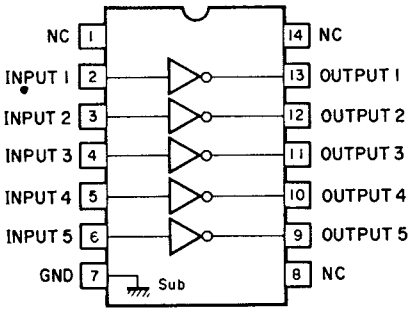

• D405 (Display Unit)

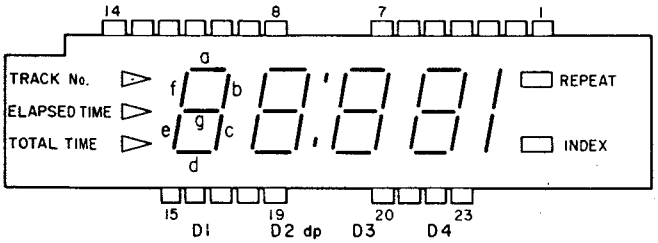

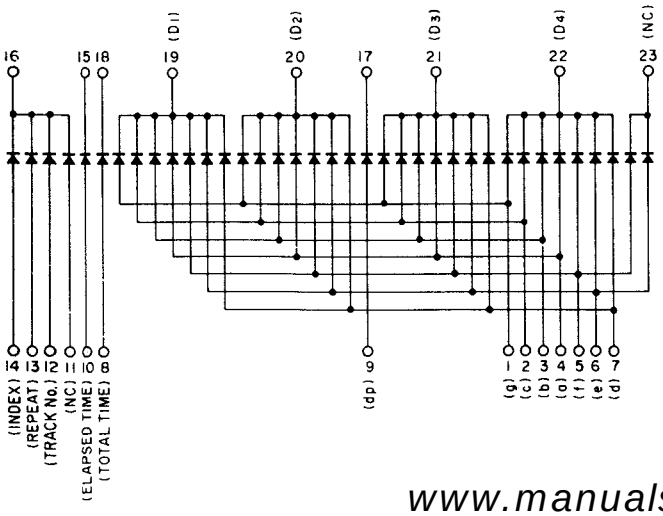

Pin No.	Function
1	segment "g" Anode
2	segment "c" Anode
3	segment "b" Anode
4	segment "a" Anode
5	segment "f" Anode
6	segment "e" Anode
7	segment "d" Anode
8	"TOTAL TIME" Anode
9	decimal point Anode
10	"ELAPSED TIME" Anode
11	Not Used
12	"TRACK NO." Anode
13	"REPEAT" Anode
14	"INDEX" Anode
15	"ELAPSED TIME" Cathode
16	"INDEX" "REPEAT" "TRACK NO." Cathode
17	decimal point Cathode
18	"TOTAL TIME" Cathode
19	digit "D1" Cathode
20	digit "D2" Cathode
21	digit "D3" Cathode
22	digit "D4" Cathode
23	Not Used

www.manualscenter.com

BLOCK DIAGRAM

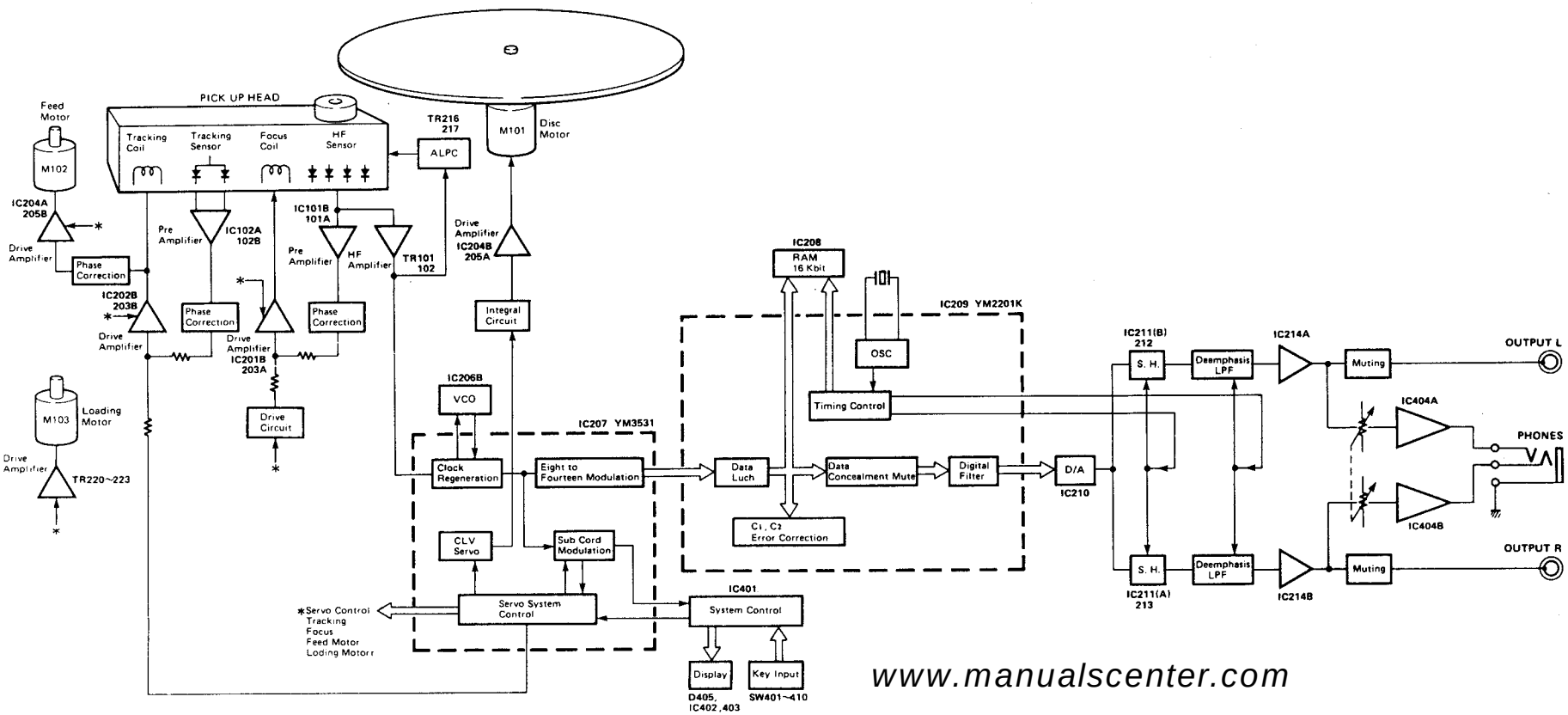

www.manualscenter.com

■ SCHEMATIC DIAGRAM (Main Circuit Board : NA087910)

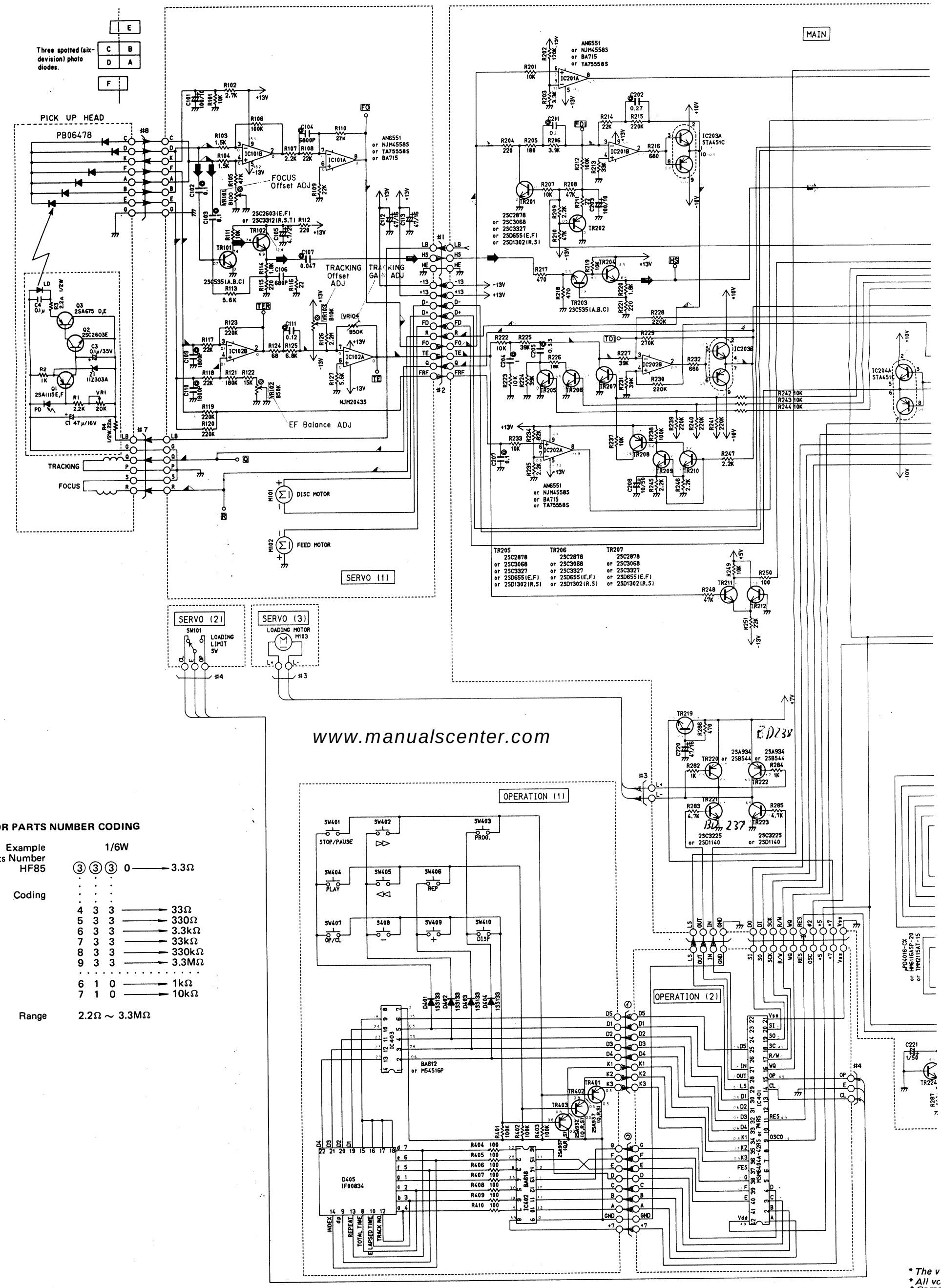

www.manualscenter.com

FIXED RESISTOR PARTS NUMBER CODING

Example — 1/6W

YAMAHA Parts Number HF85 — ③ ③ ③ 0 → 3.3Ω

Coding

4	3	3	→	33Ω
5	3	3	→	330Ω
6	3	3	→	3.3kΩ
7	3	3	→	33kΩ
8	3	3	→	330kΩ
9	3	3	→	3.3MΩ
6	1	0	→	1kΩ
7	1	0	→	10kΩ

Range 2.2Ω ~ 3.3MΩ

* The v
* All vo
* Comp
must
origin
* Schem

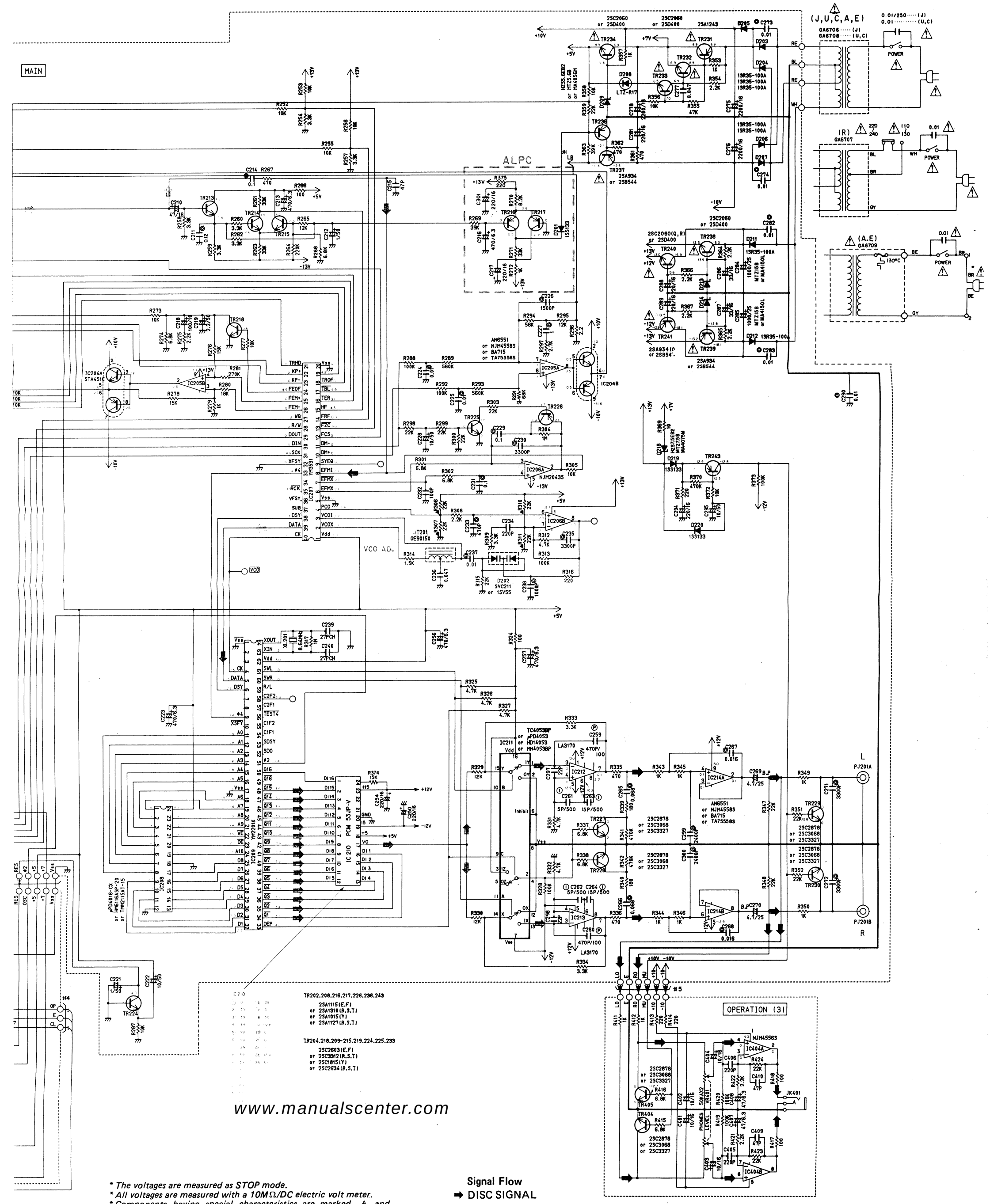

www.manualscenter.com

* The voltages are measured as STOP mode.
* All voltages are measured with a 10MΩ/DC electric volt meter.
* Components having special characteristics are marked ⚠ and must be replaced with parts having specifications equal to those originally installed.
* Schematic diagram is subject to change without notice.

Signal Flow

➡ DISC SIGNAL
◮ FOCUS SERVO
◭ TRACKING SERVO

SCHEMATIC DIAGRAM (Main Circuit Board : NA086070)

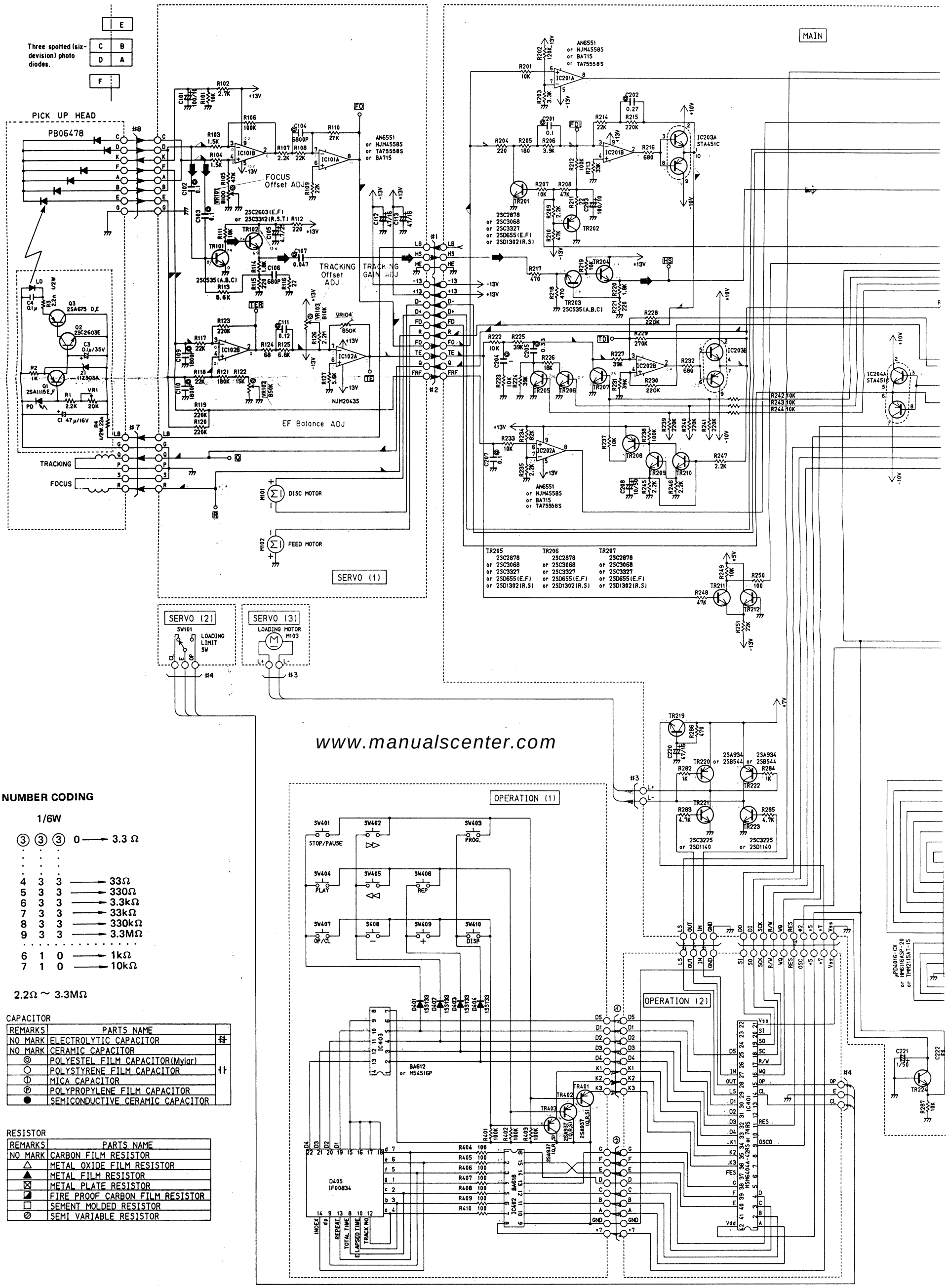

www.manualscenter.com

FIXED RESISTOR PARTS NUMBER CODING

Example — 1/6W

YAMAHA Parts Number HF85 — ③ ③ ③ 0 → 3.3 Ω

Coding

4	3	3	→ 33Ω
5	3	3	→ 330Ω
6	3	3	→ 3.3kΩ
7	3	3	→ 33kΩ
8	3	3	→ 330kΩ
9	3	3	→ 3.3MΩ
6	1	0	→ 1kΩ
7	1	0	→ 10kΩ

Range 2.2Ω ~ 3.3MΩ

CAPACITOR

REMARKS	PARTS NAME	
NO MARK	ELECTROLYTIC CAPACITOR	⋕
NO MARK	CERAMIC CAPACITOR	⫼
◎	POLYESTEL FILM CAPACITOR(Mylar)	
○	POLYSTYRENE FILM CAPACITOR	
Ⓘ	MICA CAPACITOR	
Ⓟ	POLYPROPYLENE FILM CAPACITOR	
●	SEMICONDUCTIVE CERAMIC CAPACITOR	

RESISTOR

REMARKS	PARTS NAME
NO MARK	CARBON FILM RESISTOR
△	METAL OXIDE FILM RESISTOR
▲	METAL FILM RESISTOR
⊠	METAL PLATE RESISTOR
◪	FIRE PROOF CARBON FILM RESISTOR
□	SEMENT MOLDED RESISTOR
⊘	SEMI VARIABLE RESISTOR

** The voltages are n*
** All voltages are m*
** Components hav must be replaced originally installed*
** Schematic diagram*

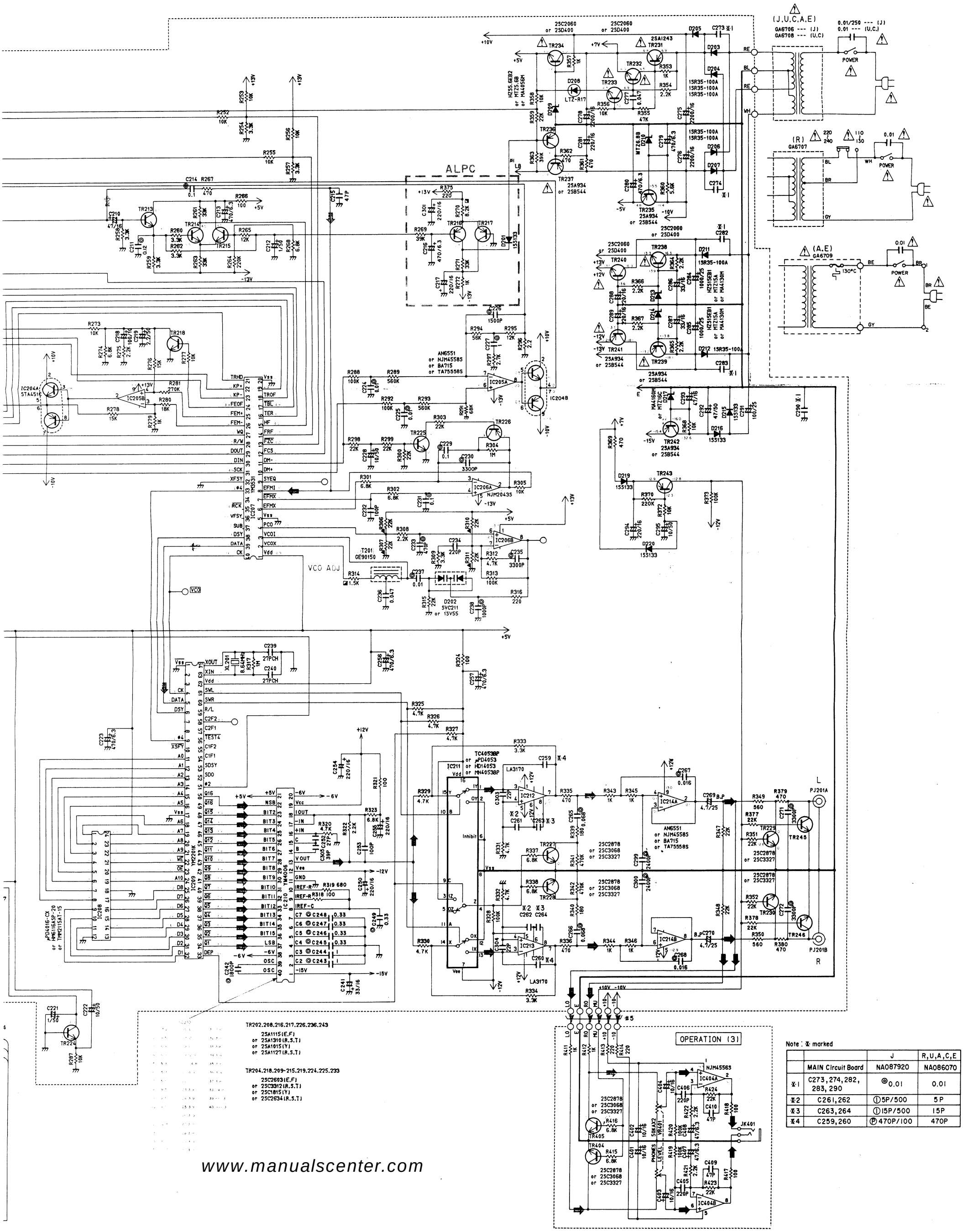

Note : ※ marked

		J	R,U,A,C,E
	MAIN Circuit Board	NA087920	NA086070
※1	C273,274,282, 283,290	◎0.01	0.01
※2	C261,262	Ⓙ5P/500	5P
※3	C263,264	Ⓙ15P/500	15P
※4	C259,260	Ⓟ470P/100	470P

www.manualscenter.com

** The voltages are measured as STOP mode.*

*** All voltages are measured with a 10MΩ/DC electric volt meter.**

** Components having special characteristics are marked ⚠ and must be replaced with parts having specifications equal to those originally installed.*

** Schematic diagram is subject to change without notice.*

Signal Flow

➡ DISC SIGNAL

◮ FOCUS SERVO

◭ TRACKING SERVO

PARTS LIST

■ ELECTRICAL PARTS

Components having special characteristics are marked ⚠ and must be replaced with parts having specifications equal to those originally installed.
- Carbon resistors of this compact disc player are 1/6W. There is no discription about them in this parts list. Use the "Part NO." HF85○○○○ or equivalent.

Ref. No.	Part No.	Description		部品名	Remarks	Common Model	Markets	ランク
※	NA 08 79 10	Main Circuit Board		メインシート	#8401～#19750			
	FC 36 46 80	Mylar Cap.	0.068μF 50V	マイラーコン	C265,266			
	FC 36 31 00	〃	1000pF 50V	〃	C238			
	FC 34 33 30	〃	3300pF 50V	〃	C230,235,271,272			
	FC 34 41 00	〃	0.01μF 50V	〃	C224,225,237,273,274 282,283,290			
	FG 21 14 70	Ceramic Cap.	47pF 50V	セラコン	C215			
	FG 21 22 20	〃	220pF 50V	〃	C234			
	FG 24 44 70	〃	0.047μF 50V	〃	C236,277			
	Fi 19 12 70	〃	27pF 50V	〃	C239,240			
	FU 35 05 00	Mica Cap.	5pF 500V	マイカコン	C261,262			
	FU 35 11 50	〃	15pF 500V	〃	C263,264			
	FV 34 64 70	Electrolytic Cap.	4.7μF 25V	BPコン	C269,270			
	UA 25 24 70	Mylar Cap.	470pF 50V	マイラーコン	C233			
	UA 25 31 50	〃	1500pF 50V	〃	C226			
	FA 15 32 40	〃	2400pF 50V	〃	C229,300			
	UA 25 41 60	〃	0.016μF 50V	〃	C267,268			
	FA 15 52 70	〃	0.27μF 50V	〃	C202			
	UA 25 51 00	〃	0.1μF 50V	〃	C201,207,214,229,231			
	UA 55 51 20	〃	0.12μF 50V	〃	C211			
	UA 55 53 30	〃	0.33μF 50V	〃	C205			
	UA 55 61 00	〃	1μF 50V	〃	C204,227			
	Ui 91 84 70	Electrolytic Cap.	470μF 6.3V	ケミコン	C213,216,223,256,257			
	Ui 93 82 20	〃	220μF 16V	〃	C217,250,254,281,288,289 294,301			
	UT 45 24 70	Polypropylene Film Cap.	470pF 100V	ポリプロコン	C259,260			
	UW 82 81 00	Electrolytic Cap.	100μF 10V	ケミコン	C203,218			
	UW 83 73 30	〃	33μF 16V	〃	C286,287			
	UW 83 74 70	〃	47μF 16V	〃	C210,220			
	UW 83 92 20	〃	2200μF 16V	〃	C275,276,278			
	UW 84 91 00	〃	1000μF 25V	〃	C284,285			
	UJ 16 61 00	〃	1μF 50V	〃	C212,221			
	UJ 16 62 20	〃	2.2μF 50V	〃	C219			
	UJ 16 71 00	〃	10μF 50V	〃	C208,222,228,295			
	GE 90 15 00	Coil	3μH	発振コイル	T201			
	HU 75 72 20	Metal Film Resistor	22kΩ	金属皮膜抵抗	R306,307,310,311			
	iA 11 15 10	Transistor	2SA1115 (E,F)	トランジスタ	TR202,208,216,217, 226,236,243			
	iA 10 15 20	〃	2SA1015 (Y)	〃	〃 } Interchangeable			
	iA 11 27 00	〃	2SA1127(R,S,T)	〃	〃			
	iB 05 44 10	〃	2SB544	〃	TR220,222,237,239, 241			
	iA 12 43 00	〃	2SA1243	〃	TR231			⚠
	iC 05 35 00	〃	2SC535 (A,B,C)	〃	TR203			⚠
	iC 26 03 10	〃	2SC2603 (E,F)	〃	TR204,209～215,218,219, 224,225,233			
	iC 18 15 20	〃	2SC1815 (Y)	〃	〃 } Interchangeable			
	iC 26 34 00	〃	2SC2634 (R,S,T)	〃	〃			
	iD 04 00 00	〃	2SD400	〃	TR232,234,238,240			⚠
	iC 32 25 00	〃	2SC3225	〃	TR221,223 } Interchangeable			
	iD 11 40 00	〃	2SD1140	〃	〃			
	iC 28 78 00	〃	2SC2878	〃	TR201,205～207			
	iD 06 55 10	〃	2SD655 (E,F)	〃	〃 } Interchangeable			
	iD 13 02 00	〃	2SD1302(R,S)	〃	〃			

※New Parts (新規部品)

CD-X2

www.manualscenter.com

Ref. No.	Part No.	Description		部品名	Remarks	Common Model	Markets	ランク
	iC 28 78 00	Transistor	2SC2878	トランジスタ	TR227~230 } Interchangeable			
	iC 30 68 00	〃	2SC3068	〃	〃			
	iF 00 34 50	Diode	1SS133	ダイオード	D201,219,220			
	iF 00 49 10	Varactor Diode	1SV55	FMバラクタダイオード	D202 } Interchangeable			
	iF 00 49 20	〃	SVC211	〃	〃			
	iF 00 61 70	LED	LTZ-R17	LED	D208			
	iX 60 23 50	Zener Diode	HZS5.6EB2	ツェナーダイオード	D209			
	iX 60 23 60	〃	HZS7.5EB2	〃	D218			
	iF 00 95 20	〃	MTZ15B	〃	D213,214			
	iH 00 14 30	Diode	ISR35-100A	ダイオード	D203~207,211,212			
	iG 03 47 00	IC	AN6551	IC	IC201,202,205,214 } Interchangeable			
	iG 07 68 00	〃	NJM4558S	〃	〃			
	iG 13 22 00	〃	BA715	〃	〃			
	iG 08 02 00	〃	NJM2043S	〃	IC206			
	iG 05 51 00	〃	TC4053BP	〃	IC211 } Interchangeable			
	iG 10 59 00	〃	μPD4053	〃	〃			
	iG 11 91 00	〃	PCM53JP-V	〃	IC210			
	iG 11 92 00	〃	μPD4016-CX	〃	IC208 } Interchangeable			
	iG 12 13 00	〃	HM6116ASP-20	〃	〃			
	iG 13 18 00	〃	TMM2115AT-15	〃	〃			
	iG 11 94 00	〃	STA451C	〃	IC203,204			
	iG 03 54 10	〃	LA3170	〃	IC212,213			
	iT 22 01 20	〃	YM2201K	〃	IC209			
	iT 35 31 00	〃	YM3531	〃	IC207			
	LB 20 19 60	Pin Jack	2P	ピンジャック	PJ201			
	QU 00 58 00	Quartz Crystal Unit	8.64MHz	水晶振動子	XL201			
	LA 00 20 30	Lapping Terminal	P=5 4P i-Type	i型ラッピング端子板				
	LB 91 80 30	Base Pin	3P i-Type	XHベースピン				
	LB 92 50 20	Shurt Plug	2P i-Type	i型ショートプラグ				
	LB 92 50 60	〃	6P i-Type	〃				
	LB 92 51 00	〃	10P i-Type	〃				
	LB 40 05 70	Base Pin	TEB4P-3HF	2.5ピッチベースピン				
	LB 60 78 70	〃	TEB10P-SHF	〃				
	BB 06 83 70	Metal, Earth		アース金具				

※New Parts (新規部品)

www.manualscenter.com

Ref. No.	Part No.	Description		部品名	Remarks	Common Model	Markets	ランク
※	***NA 08 60 70***	***Main Circuit Board***		メインシート	#34401~ #105901~			
	UA 25 46 80	Mylar Cap.	0.068μF 50V	マイラーコン	C265,266			
	UA 25 31 00	〃	1000pF 50V	〃	C238			
	UA 25 33 30	〃	3300pF 50V	〃	C230,235,271,272			
	UA 25 41 00	〃	0.01μF 50V	〃	C224,225,237			
	FG 24 41 00	Ceramic Cap.	0.01μF 50V	セラコン	C273,274,282,283,290			
	FG 21 14 70	〃	47pF 50V	〃	C215			
	FG 21 22 20	〃	220pF 50V	〃	C234			
	FG 21 12 70	〃	27pF 50V	〃	C252			
	FG 21 21 00	〃	100pF 50V	〃	C253			
	FG 21 12 20	〃	22pF 50V	〃	C303,304			
	FG 21 13 90	〃	39pF 50V	〃	C305			
	FG 24 44 70	〃	0.047μF 50V	〃	C236,277			
	Fi 19 12 70	〃	27pF 50V	〃	C239,240			
	FG 21 05 00	〃	5pF 50V	〃	C261,262			
	FG 21 11 50	〃	15pF 50V	〃	C263,264			
	UK 14 64 70	Electrolytic Cap.	4.7μF 25V	BPコン	C269,270			
	UA 25 24 70	Mylar Cap.	470pF 50V	マイラーコン	C233			
	UA 25 31 50	〃	1500pF 50V	〃	C226			
	FA 15 32 40	〃	2400pF 50V	〃	C299,300			
	UA 25 31 80	〃	1800pF 50V	〃	C242			
	UA 25 41 60	〃	0.016μF 50V	〃	C267,268			
	FA 15 52 70	〃	0.27μF 50V	〃	C202			
	UA 25 51 00	〃	0.1μF 50V	〃	C201,207,214,229,231			
	UA 55 51 20	〃	0.12μF 50V	〃	C211			
	UA 55 53 30	〃	0.33μF 50V	〃	C205,245~249			
	UA 55 61 00	〃	1μF 50V	〃	C204,227,243,244			
	Ui 91 84 70	Electrolytic Cap.	470μF 6.3V	ケミコン	C213,216,223,256,257,279,280			
	Ui 93 82 20	〃	220μF 16V	〃	C217,250,254,255,281,288,289,294,301			
	FG 21 24 70	Ceramic Cap.	470pF 50V	セラコン	C259,260			
	UW 82 81 00	Electrolytic Cap.	100μF 10V	ケミコン	C203,218			
	UW 83 73 30	〃	33μF 16V	〃	C286,287,241			
	UW 83 74 70	〃	47μF 16V	〃	C210,220,293			
	UW 84 81 00	〃	100μF 25V	〃	C291			
	UW 93 92 20	〃	2200μF 16V	〃	C275,276,278			
	UW 94 91 00	〃	1000μF 25V	〃	C284,285			
	UJ 16 61 00	〃	1μF 50V	〃	C211,221			
	UJ 16 62 20	〃	2.2μF 50V	〃	C219			
	UJ 16 71 00	〃	10μF 50V	〃	C208,222,228,295			
	UJ 16 74 70	〃	47μF 50V	〃	C292			
	GE 90 15 00	Coil	3μH	発振コイル	T201			
	HU 75 72 20	Metal Film Resistor	22kΩ	金属皮膜抵抗	R306,307,310,311			
	HV 45 42 20	Flame Proof Carbon Resistor	22Ω	不燃化カーボン抵抗	R211			
	HV 45 61 50	〃	1.5kΩ	〃	R314			
	HV 45 68 20	〃	8.2kΩ	〃	R270			
	iA 11 15 10	Transistor	2SA1115 (E,F)	トランジスタ	TR202,208,216,217,226,236,243			
	iA 10 15 20	〃	2SA1015 (Y)	〃	〃 } Interchangeable			
	iA 11 27 00	〃	2SA1127 (R,S,T)	〃	〃			
	iA 09 34 00	〃	2SA934	〃	TR220,222,235,237,239,241,242 } Interchangeable			
	iB 05 44 10	〃	2SB544	〃	〃			

※New Parts (新規部品)

www.manualscenter.com

Ref. No.	Part No.	Description		部品名	Remarks	Common Model	Markets	ランク
	iA 12 43 00	Transistor	2SA1243	トランジスタ	TR231			⚠
	iC 05 35 00	〃	2SC535(A,B,C)	〃	TR203			
	iC 26 03 10	〃	2SC2603 (E,F)	〃	TR204,209~215,218,219,224,225,233	Interchangeable		
	iC 18 15 20	〃	2SC1815 (Y)	〃	〃			
	iC 26 34 00	〃	2SC2634(R,S,T)	〃	〃			
	iC 20 60 00	〃	2SC2060	〃	TR232,234,238,240	Interchangeable		
	iD 04 00 00	〃	2SD400	〃	〃			
	iC 32 25 00	〃	2SC3225	〃	TR221,223	Interchangeable		
	iD 11 40 00	〃	2SD1140	〃	〃			
	iC 28 78 00	〃	2SC2878	〃	TR201,205~207	Interchangeable		
	iC 30 68 00	〃	2SC3068	〃	〃			
	iD 06 55 00	〃	2SD655 (E,F)	〃	〃			
	iD 13 02 00	〃	2SD1302(R,S)	〃	〃			
	iC 28 78 00	〃	2SC2878	〃	TR227~230,245,246			
	iF 00 34 50	Diode	1SS133	ダイオード	D201,215,216,219,220			
	iF 00 49 10	Varactor,Diode	1SV55	FMバラクタダイオード	D202	Interchangeable		
	iF 00 49 20	〃	SVC211	〃	〃			
	iF 00 61 70	LED	LTZ-R17	LED	D208			
	iX 60 23 50	Zener Diode	HZS5.6EB2	ツェナーダイオード	D209			
	iF 00 95 20	〃	MTZ15B	〃	D213,214			
	iF 00 86 20	〃	MA4160M	〃	D217	Interchangeable		
	iF 00 86 40	〃	MTZ16C	〃	〃			
	iX 60 43 00	〃	MTZ6.8B	〃	D210			
	iH 00 14 30	Diode	1SR35-100A	〃	D203~207,211,212			
	iG 03 47 00	IC	AN6551	IC	IC201,202,205,214	Interchangeable		
	iG 07 68 00	〃	NJM4558S	〃	〃			
	iG 13 22 00	〃	BA715	〃	〃			
	iG 08 02 00	〃	NJM2043S	〃	IC206			
	iG 05 51 00	〃	TC4053BP	〃	IC211	Interchangeable		
	iG 10 59 00	〃	μPD4053	〃	〃			
	iG 11 92 00	〃	μPD4016-CX	〃	IC208	Interchangeable		
	iG 12 13 00	〃	HM6116ASP-20	〃	〃			
	iG 13 18 00	〃	TMM2115AT-15	〃	〃			
	iG 11 94 00	〃	STA451C	〃	IC203,204			
	iG 03 54 10	〃	LA3170	〃	IC212,213			
	iT 22 01 20	〃	YM2201K	〃	IC209			
	iT 35 31 00	〃	YM3531	〃	IC207			
	iT 40 06 00	〃	YM4006	〃	IC210			
	LB 20 19 60	Pin Jack	2P	ピンジャック	PJ201			
	QU 00 58 00	Quartz Crystal Unit	8.64MHz	水晶振動子	XL201			
	LA 00 20 30	Lapping Terminal	4P P=5 i-Type	i型ラッピング端子板				
	LB 91 80 30	Base Pin	3P i-Type	XHベースピン				
	LB 92 50 20	Short Plug	2P i-Type	i型シュートプラク				
	LB 92 50 60	〃	6P i-Type	〃				
	LB 92 51 00	〃	10P i-Type	〃				
	LB 40 05 70	Base Pin	TEB4P-SHF	2.5ピッチベースピン				
	LB 60 78 70	〃	TEB10P-SHF	〃				
	BB 06 83 70	Metal Earth		アース金具				

※New Parts (新規部品)

www.manualscenter.com

Ref. No.	Part No.	Description		部品名	Remarks	Common Model	Markets	ランク
	NA 08 60 60	***Servo Circuit Board***		サーボシート				
	FG 21 26 80	Ceramic Cap.	680pF 50V	セラコン	C106			
	UA 25 31 80	Mylar Cap.	1800pF 50V	マイラーコン	C109,110			
	UA 25 36 80	〃	6800pF 50V	〃	C104			
	UA 25 44 70	〃	0.047μF 50V	〃	C107			
	UA 25 51 00	〃	0.1μF 50V	〃	C102,103			
	UA 55 51 20	〃	0.12μF 50V	〃	C111			
	UW 92 81 00	Electrolytic Cap.	100μF 10V	ケミコン	C101			
	UW 93 74 70	〃	47μF 16V	〃	C112,113			
	UW 94 64 70	〃	4.7μF 25V	〃	C105			
	HT 17 04 80	Pre-Set Potentiometer	B10kΩ	半固定抵抗	VR103			
	HT 17 05 10	〃	B50kΩ	〃	VR102,104			
	HT 17 05 20	〃	B100kΩ	〃	VR101			
	iC 05 35 00	Transistor	2SC535(A,B,C)	トランジスタ	TR101			
	iC 26 03 10	〃	2SC2603 (E,F)	〃	TR102			
	iG 08 02 00	IC	NJM2043S	IC	IC102			
	iG 03 47 00	〃	AN6551	〃	IC101 } Interchangeable			
	iG 07 68 00	〃	NJM4558S	〃	〃 } Interchangeable			
	iG 13 22 00	〃	BA715	〃	〃 } Interchangeable			
	KA 90 63 70	Switch	MSW-1485	エンドスイッチ	SW101			
	NA 08 60 80	***Operation Circuit Board***		オペレーションシート	Black			
	NA 08 60 90	〃		〃	Silver			
	UW 93 71 00	Electrolytic Cap.	10μF 16V	ケミコン	C401~404			
	UW 91 74 70	〃	47μF 6.3V	〃	C407,408			
	FG 21 14 70	Ceramic Cap.	47pF 50V	セラコン	C409,410			
	FG 21 22 20	〃	220pF 50V	〃	C405,406			
	HS 41 25 50	Potentiometer	A50kΩ×2	可変抵抗器	VR401			
	iA 09 37 00	Transistor	2SA937(Q,R,S)	トランジスタ	TR401~403			
	iC 28 78 00	〃	2SC2878	〃	TR404,405 } Interchangeable			
	iC 30 68 00		2SC3068	〃	〃 } Interchangeable			
	iF 00 61 30	Diode	1SS133	ダイオード	D401~404			
	iF 00 83 40	Display Unit		表示器	D405			
	iG 07 74 00	IC	NJM4556S	IC	IC404			
	iG 13 20 00	〃	BA618	〃	IC402			
	iG 03 11 00	〃	M54516P	〃	IC403 } Interchangeable			
	iG 14 42 00	〃	BA612	〃	〃 } Interchangeable			
	iG 14 43 10	〃	MSM6404A-74RS	〃	IC401			
	KA 90 63 80	Switch	EVQ-QRB-04M	ライトタッチスイッチ	SW401~410			
	LB 30 17 10	Phone Jack	Gray	ホーンジャック	JK401 Silver			
	LB 30 17 20	〃	Black	〃	〃 Black			

※New Parts（新規部品）

www.manualscenter.com

■ EXPLODED VIEW

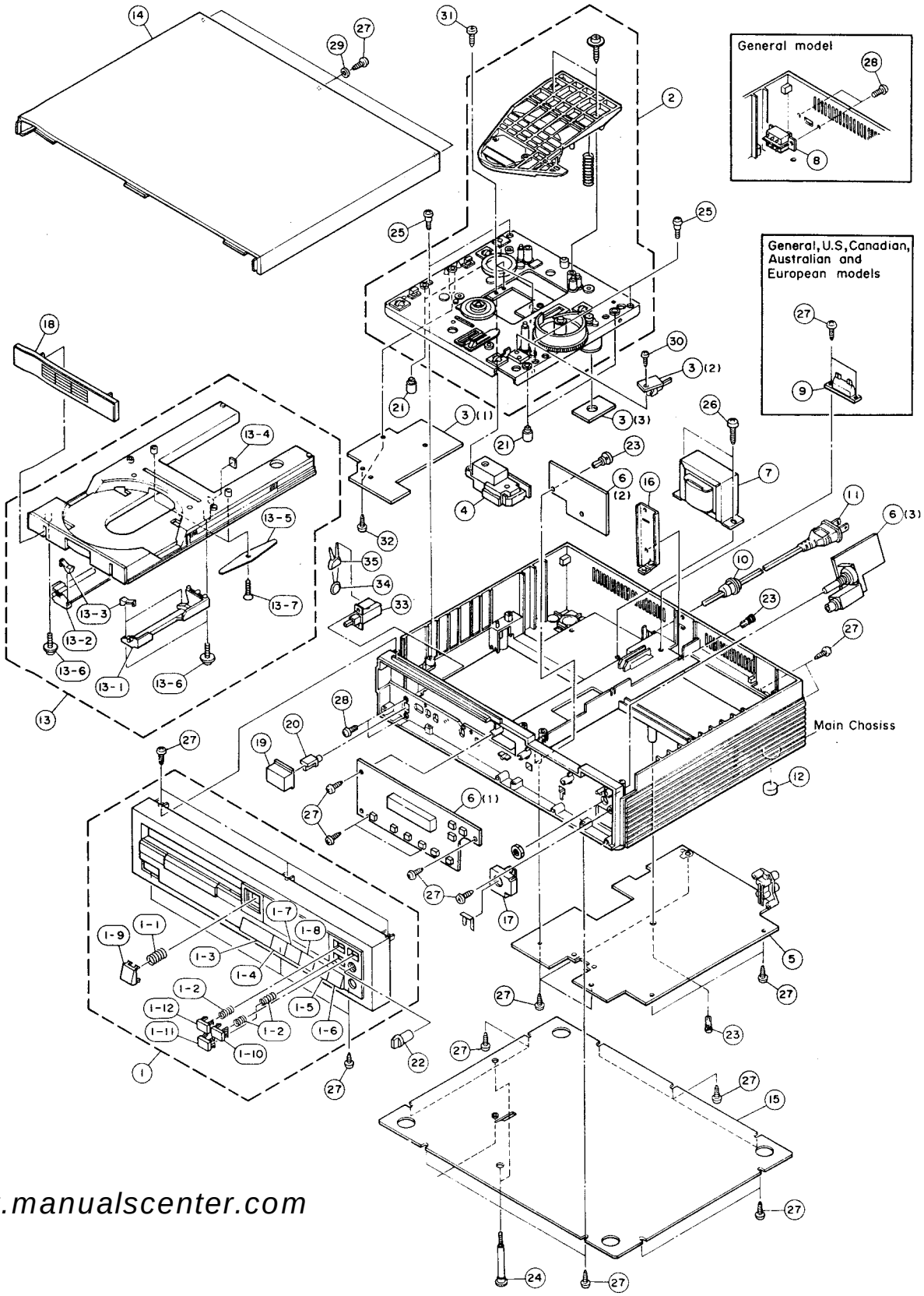

www.manualscenter.com

■MECHANISM PARTS

	Ref. No.	Part No.	Description		部品名	Remarks	Common Model	Markets	ランク
※	1	NB 62 37 60	Panel Unit		パネルユニット	Silver			
※	〃	NB 62 37 70	〃		〃	Black			
	1-1	AA 62 05 00	Spring		イシェクトスプリング				
	1-2	AA 62 27 90	〃		スプリング				
※	1-3	CB 63 54 80	Button		OPボタン	Black PLAY			
※	〃	CB 63 67 90	〃		〃	Silver 〃			
※	1-4	CB 63 54 90	〃		〃	Black PAUSE STOPE			
※	〃	CB 63 68 00	〃		〃	Silver 〃			
※	1-5	CB 63 68 10	〃		〃	Black			
※	〃	CB 63 68 20	〃		〃	Silver 〃			
※	1-6	CB 63 68 30	〃		〃	Black			
※	〃	CB 63 68 40	〃		〃	Silver 〃			
※	1-7	CB 63 68 50	〃		〃	Black −			
※	〃	CB 63 68 60	〃		〃	Silver 〃			
※	1-8	CB 63 68 70	〃		〃	Black +			
※	〃	CB 63 68 80	〃		〃	Silver 〃			
※	1-9	CB 63 68 90	〃		EJボタン	Black OPEN CLOSE			
※	〃	CB 63 69 00	〃		〃	Silver 〃			
※	1-10	CB 63 69 10	〃		キイボタン	Black DISPLAY			
※	〃	CB 63 69 20	〃		〃	Silver 〃			
※	1-11	CB 63 69 30	〃		〃	Black PROG.			
※	〃	CB 63 69 40	〃		〃	Silver 〃			
※	1-12	CB 63 69 50	〃		〃	Black REPEAT			
※	〃	CB 63 69 60	〃		〃	Silver 〃			
※	2	NB 62 37 50	Disc Mechanism Unit		DMユニット				
※	3	NA 08 60 60	Servo Circuit Board		サーボシート				
※	4	PB 06 47 80	Optical Pick Up Head	MLP-2	光ピックアップヘッド				
※	5	NA 08 79 10	Main Circuit Board		メインシート	#8401～#19750			
	〃	NA 08 64 80	〃		〃	#24751～29400 #103501～105500			
	〃	NA 08 60 70	〃		〃	#34401～ #105701～			
※	6	NA 08 60 80	Operation Circuit Board		オペレーションシート	Black			
※	〃	NA 08 60 90	〃		〃	Silver			
	7	GA 67 06 00	Power Transformer		電源トランス			J	⚠
	〃	GA 67 07 00	〃		〃			R	⚠
	〃	GA 67 08 10	〃		〃			U,C	⚠
	〃	GA 67 09 20	〃		〃			A,E	⚠
	8	KA 40 07 40	Slide Switch		スライドスイッチ			R	⚠
	9	LA 00 29 50	Terminal Plate	2P	中継端子板			R,U,C,A,E	
	10	CB 61 68 10	Cord Stoper	CM-22A	コードストッパー			J,U,C	
	〃	CB 62 01 90	〃	CM-22B	〃			R,A,E	
	11	MG 00 08 40	Power Cord	10A 125V 2m	電源コード	Interchangeable		U,C	⚠
	〃	MG 00 12 40	〃	10A 125V 2m	〃			U,C	⚠
	〃	MG 00 09 20	〃	7.5A 250V 2.5m	〃	Interchangeable		A	⚠
	〃	MG 00 14 90	〃	7.5A 250V 2.5m	〃			A	⚠
	〃	MG 00 16 20	〃	2.5A 250V 2m	〃			E	⚠
	〃	MG 00 16 30	〃	6A 250V 2m	〃			R	⚠
	〃	MG 00 18 10	〃	7A 150V 2.2m	〃			J	⚠
	12	CC 02 63 10	Leg		脚		CD-X1		
	13	NB 62 37 40	Disc Tray Ass'y		ディスクトレイAss'y				
※	13-1	CB 62 37 00	Lifter (R)		リフター (R)		CD-X1		
	13-2	CB 62 37 10	〃 (L)		〃 (L)		CD-X1		
	13-3	CB 62 84 70	Disc Pad		ディスクパッド		CD-X1		
	13-4	CB 62 79 60	Cushion Rubber		クッションコム		CD-X1		

※New Parts (新規部品)

www.manualscenter.com

	Ref. No.	Part No.	Description		部品名	Remarks	Common Model	Markets	ランク
	13-5	AA 61 91 80	SP Lifter		SPリフター		CD-X1		
	13-6	EX 60 02 40	BW Head Tapping Screw	3x8(φ10)FCRM3-BI	BWヘッドタッピングネジ				
	13-7	EO 03 00 86	Flat Head Tapping Screw	3×8 ZMC2-Y	皿タッピングネジ	PACK			
※	14	AA 62 57 10	Top Cover		トップカバー	Black			
	〃	AA 62 19 40	〃		〃	Silver	CD-X1		
	15	AA 62 12 30	Bottom Cover		ボトムカバー	Black	CD-X1		
	〃	AA 61 94 10	〃		〃	Silver	CD-X1		
	16	AA 61 94 20	Ground Plate		アース金具		CD-X1		
※	17	AA 62 38 80	Holder,Jack		ジャックホルダー				
※	18	CB 63 54 40	Lid,Tray		リッド	Black			
※	〃	CB 63 67 30	〃		〃	Silver			
※	19	CB 63 67 40	Button		ボタン	Black POWER			
※	〃	CB 63 67 50	〃		〃	Silver 〃			
※	20	CB 63 55 00	Bush, Button		ボタンブッシュ				
※	21	CB 62 84 10	Rubber, Damper		ダンパーゴム		CD-X1		
※	22	CB 63 54 70	Knob		ツマミ	Black PHONES LEVEL			
※	〃	CB 63 67 60	〃		〃	Silver 〃			
	23	CB 06 88 80	Plastic Rivet		プラスチックリベット				
	24	AA 62 26 40	Screw,Transport		輸送ネジ				
	25	AA 62 12 10	Screw		段付ネジ				
	26	Ei 04 01 26	Binding Head Tapping Screw	4×12 ZMC2-Y	バインドタッピングネジ	PACK			
	27	Ei 33 01 06	〃	3×10 FCRM3-BI	〃	PACK			
	28	ED 33 00 86	Binding Head Screw	3×8 FCRM3-BI	バインド小ネジ	PACK			
	29	EV 41 30 36	Toothed Lock Washer	φ3 FCRM3-BI	歯付座金	PACK			
	30	Ei 02 61 06	Binding Head Tapping Screw	2.6×10 ZMC2-Y	バインドタッピングネジ	PACK			
	31	ED 32 60 46	Binding Head Screw	2.6×4 FCRM3-BI	バインド小ネジ	PACK			
	32	EA 33 00 86	Pan Head Tapping Screw	3×8 FCRM3-BI	ナベタッピングネジ	PACK			
	33	KA 80 32 90	Power Switch	SDLC-IP	パワースイッチ				
	34	Fi 32 41 00	Ceramic Cap.	0.01μF 250V	セラコン			J	
	〃	Fi 38 41 00	〃	0.01μF	〃			R,U,A,C,E	
	35	CB 60 08 10	Cover		コンデンサーカバー			R,U,A,C,E	
	〃	CB 60 19 00	〃		〃			J	
		CB 06 92 50	Binding Tie	BK-1	インシュロックタイ				
			Accessories		付属品				
		Mi 08 87 90	Pin Plug Cord	1m	出力コード				

※New Parts (新規部品)

www.manualscenter.com

■ EXPLODED VIEW(Disc Mechanism Unit)

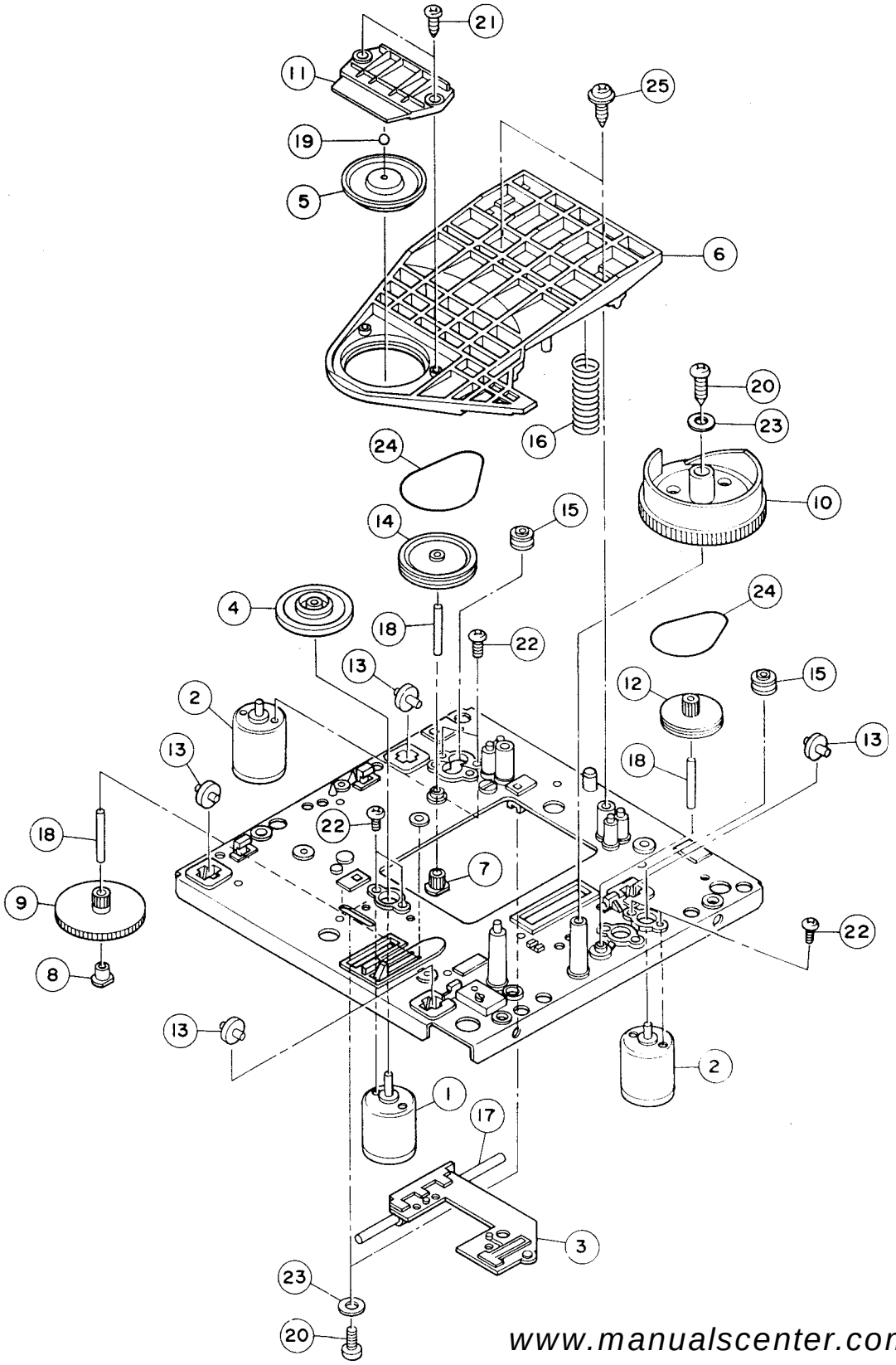

www.manualscenter.com

■MECHANISM PARTS(Disc Mechanism Unit)

Ref. No.	Part No.	Description		部品名	Remarks	Common Model	Markets	ランク
	NB 62 37 50	*Disc Mechanism Unit*		DMユニット				
1	JC 00 09 70	Motor,Disc		ディスクモーター				
2	JC 00 09 80	〃 ,Loading		ローディングモーター				
3	NB 62 26 10	S.L. Outsert		S.L.アウトサート				
※ 4	NB 62 99 70	Turntable Unit		ターンテーブルユニット				
5	CB 64 24 00	Stabilizer		スタビライザ				
6	CB 62 36 80	Flapper		フラッパ				
7	CB 62 30 80	Pinion		ピニオン				
8	CB 62 36 20	Bush		ブッシュ				
9	CB 62 31 00	Drive Gear		ドライブギヤ				
10	CB 63 52 70	Cam,Loading		ローディングカム				
11	CB 62 36 40	Thrust Bearing		スラストベアリング				
12	CB 63 47 90	Idle Pulley		アイドルプーリ				
13	CB 62 36 70	Roller		ローラー				
14	CB 63 48 00	C Pulley		Cプーリ				
15	CB 63 47 80	P Pulley		Pプーリ				
16	AA 62 43 50	Spring,Flapper		フラッパースプリング				
17	AA 61 93 20	Shaft (L)		シャフト (L)				
18	AA 61 93 30	〃 (S)		〃 (S)				
19	EZ 00 19 80	Steel Ball	φ2.5	スチールボール				
20	Ei 33 00 86	Binding Head Tapping Screw	3×8 FCRM3-BI	バインドタッピングネジ	PACK			
21	Ei 32 60 56	〃	2.6×5 FCRM3-BI	〃	PACK			
22	ED 32 00 50	Binding Head Screw	2×5 FCRM3-BI	バインド小ネジ				
23	EV 20 30 36	Washer	φ3 FCRM3-BI	平座金	PACK			
24	CB 63 78 30	V-Belt		Vベルト				
25	EK 03 50 20	BW Head Tapping Screw	3×12 ZMC2-Y	BWヘッドタッピングネジ				

※New Parts (新規部品)

www.manualscenter.com