STEREO POWER AMPLIFIER

MX-10000

SERVICE MANUAL

EUROPEAN VERSION

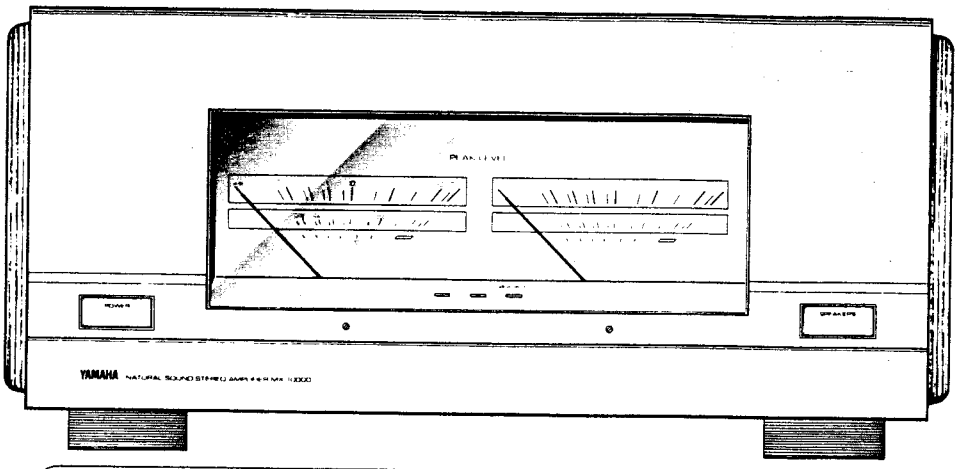

IMPORTANT NOTICE

This manual has been provided for the use of authorized Yamaha Retailers and their service personnel. It has been assumed that basic service procedures inherant to the industry, and more specifically Yamaha Products, are already known and understood by the users, and have therefore not been restated.

WARNING: Failure to follow appropriate service and safety procedures when servicing this product may result in personal injury, destruction of expensive components and failure of the product to perform as specified. For these reasons, we advise all Yamaha product owners that all service required should be performed by an authorized Yamaha Retailer or the appointed service representative.

IMPORTANT: The presentation or sale of this manual to any individual or firm does not constitute authorization, certification or recognition of any applicable technical capabilities, or establish a principle-agent relationship of any form.

The data provided is believed to be accurate and applicable to the unit(s) indicated on the cover. The research, engineering, and service departments of Yamaha are continually striving to improve Yamaha products. Modifications are, therefore, inevitable and specifications are subject to change without notice or obligation to retrofit. Should any discrepancy appear to exist, please contact the distributor's Service Division.

WARNING: Static discharges can destroy expensive components. Discharge any static electricity your body may have accumulated by grounding yourself to the ground buss in the unit (heavy gauge black wires connect to this buss).

IMPORTANT: Turn the unit OFF during disassembly and parts replacement. Recheck all work before you apply power to the unit.

■ CONTENTS

TO SERVICE PERSONNEL 1
SPECIFICATIONS 1
INTERNAL VIEW 1
REAR PANELS 2
BLOCK DIAGRAM 3
DISASSEMBLY PROCEDURES 4
ADJUSTMENTS ..... 5 ~ 6
IC BLOCK DIAGRAM 7
PRINTED CIRCUIT BOARD ..... 8 ~ 12
WIRING 13
SCHEMATIC DIAGRAM 14
PARTS LIST ..... 15 ~ 28

100090

SINCE 1887 YAMAHA

NIPPON GAKKI CO., LTD. HAMAMATSU, JAPAN

1.82K-243 Printed in Japan '87. 8

MX-10000

TO SERVICE PERSONNEL

1. Critical Components Information.
   Components having special characteristics are marked ⚠ and must be replaced with parts having specifications equal to those originally installed.

2. Leakage Current Measurement (For 120V Model Only).
   When service has been completed, it is imperative that you verify that all exposed conductive surfaces are properly insulated from supply circuits.

- Meter impedance should be equivalent to 1500 ohm shunted by 0.15μF.
- Leakage current must not exceed 0.5mA.
- Be sure to test for leakage with the AC plug in both polarities.

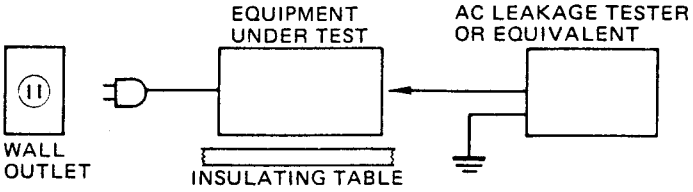

- **POLARIZATION (U model only)**

  This amplifier product is equipped with a polarized alternating current line plug (a plug having one blade wider than the other). This plug will fit into the power outlet only one way. This is a safety feature.

SPECIFICATIONS

AUDIO SECTION

Minimum RMS Output Power Per Channel	
20Hz ~ 20kHz	
0.001% THD 8 ohms	250W
0.001% THD 6 ohms	300W
0.002% THD 4 ohms	400W
Dynamic Power Per Channel	
(by IHF Dynamic Headroom measuring method)	
8 ohms	350W
6 ohms	450W
4ohms	600W
2 ohms	900W
1 ohm	1200W
Power Band Width	
0.01% THD, 125W, 8Ω	10Hz ~ 100kHz
Damping Factor	
1kHz 8 ohms	1000
Input Sensitivity/Impedance	
MAIN IN	1.5V/25kΩ
Frequency Response	
MAIN IN	+0, −2dB
2Hz ~ 300kHz	
Total Harmonic Distortion	
MAIN IN (125W/8Ω)	0.0005%
Signal to Noise Ratio (IHF-A-Network)	
MAIN IN (Shorted)	132dB
Channel Separation	
MAIN IN	
(1kHz/20kHz)	100dB/90dB
Slew Rate	500V/μsec
Power Supply	AC 120V 60Hz (U) AC220V 50Hz (G)
Power Consumption	600W
AC Outlet Unswitched	100W (max) (U)

Dimensions (W x H x D)	475 x 220 x 543 mm (18-11/16")x(8-3/4")x(21-3/8")
Weight	43 kg (94 lbs 13 oz)
Accessories	Control Cable x 1 Slotted Screwdriver x 1 Polishing Cloth x 1

**Specifications subject to change without notice.*
(U) ..... U.S.A. model
(G) ..... European model

•DIMENSIONS

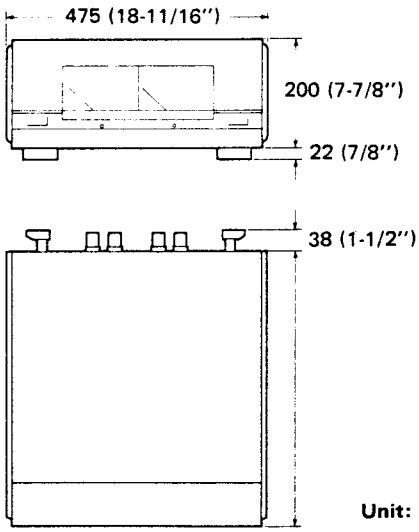

Unit: mm (inch)

INTERNAL VIEW

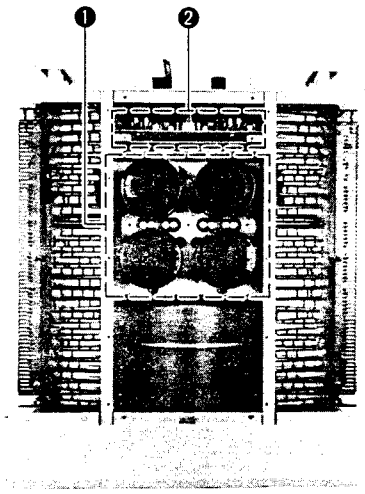

TOP VIEW

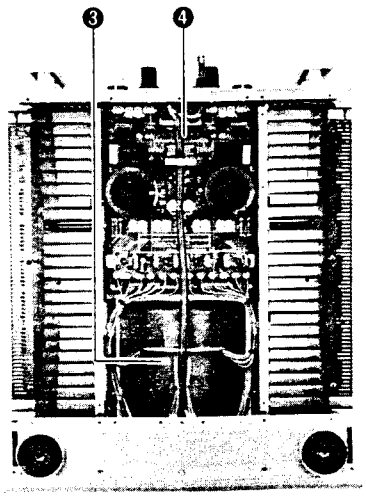

BOTTOM VIEW

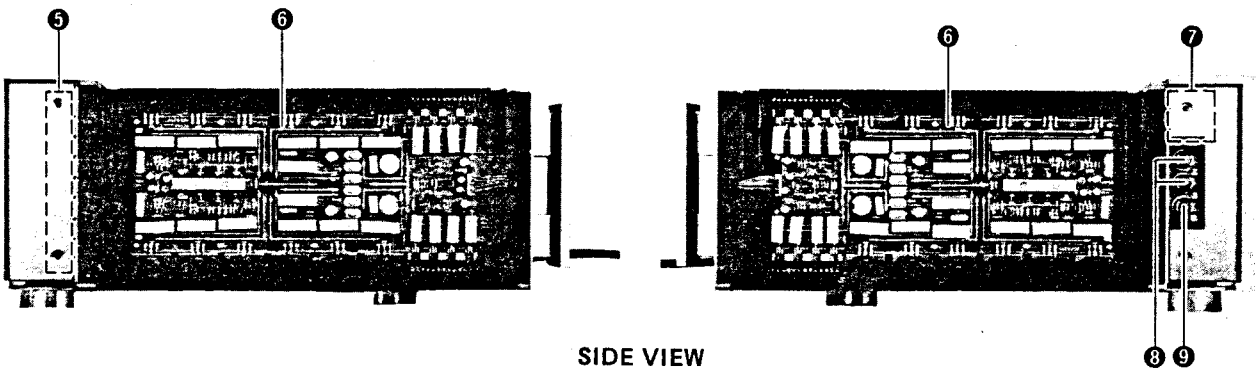

SIDE VIEW

❶ Electrolytic Cap. (22000μF 100V): VC475100
❷ Relay Circuit Board (Amp.)
❸ Power Transformer Ass'y: VC800800 (U)
VC801000 (G)
❹ Center Circuit Board
❺ Relay Circuit Board (Amp.)
❻ Main Circuit Board
❼ Sub Transformer: XB998002 (U)
XB999002 (G)
❽ Fuse (10A 250V): KB001390 (U)
Fuse (T4.0A 250V): KB000790 (G)
❾ Fuse (2.0A 250V): KB001030 (U)
Fuse (T1.0A 250V): KB000730 (G)

REAR PANELS

▼ U model

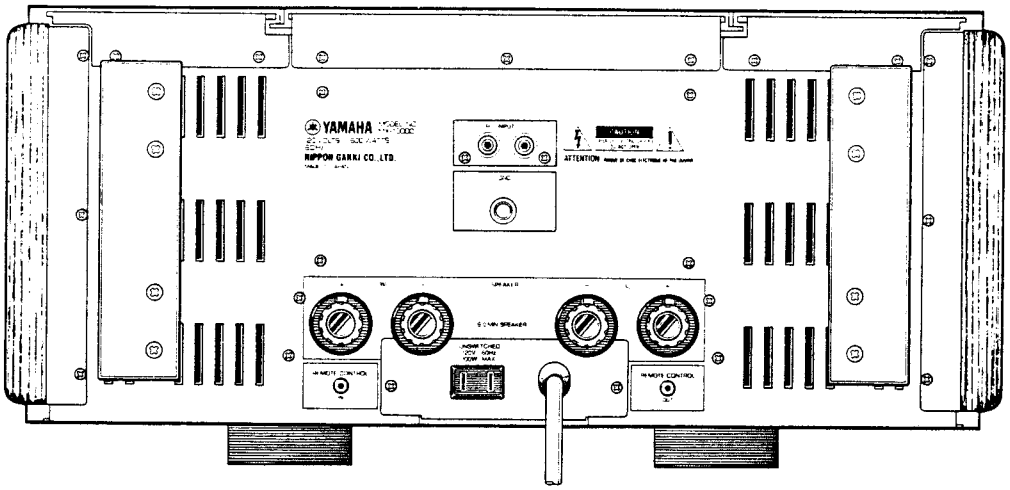

▼ G model

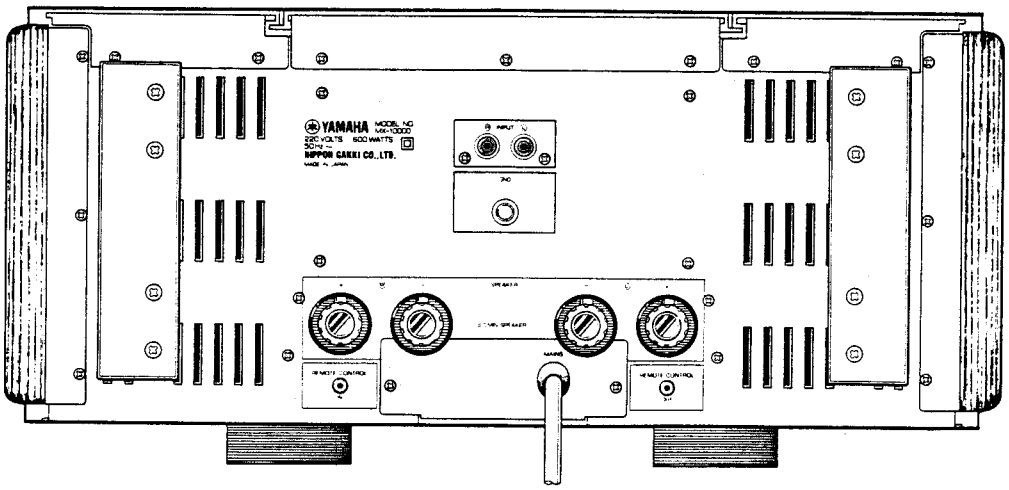

BLOCK DIAGRAM

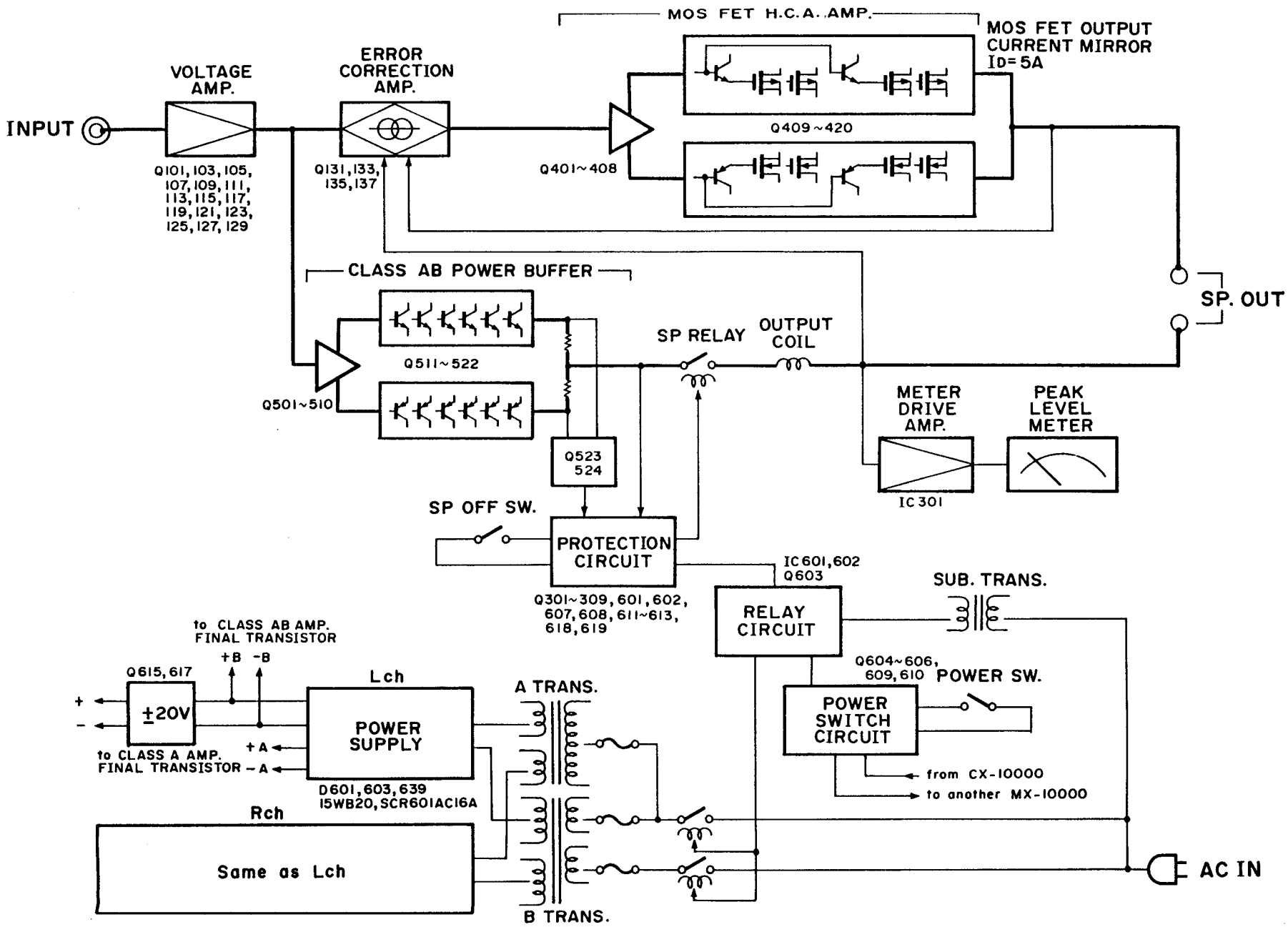

DISASSEMBLY PROCEDURES

1. **Removal of Top Cover**
   a. Remove 3 screws (①) and slide the Top Cover back.

2. **Removal of Side Top Panel and Side Wood Panel**
   a. Remove 10 screws (②).
   b. Remove 10 screws (③).
   c. Remove 14 screws (④) and remove the Side Top Panel and Side Wood Panel.

3. **Removal of Input Circuit Board Cover**
   a. Remove 4 screws (⑤) and remove the Input Circuit Board Cover.
   *With this much disassembly done, adjustments can be made.

4. **Removal of Panel Unit**
   a. Remove 11 screws (⑥).
   b. Remove the Panel Unit toward the front, being cautions of the 14 pin connector of the Meter Ass'y.

5. **Removal of Bottom Cover**
   a. Remove 25 screws (⑦).
   b. Remove 2 screws (⑧) and remove the Bottom Cover.

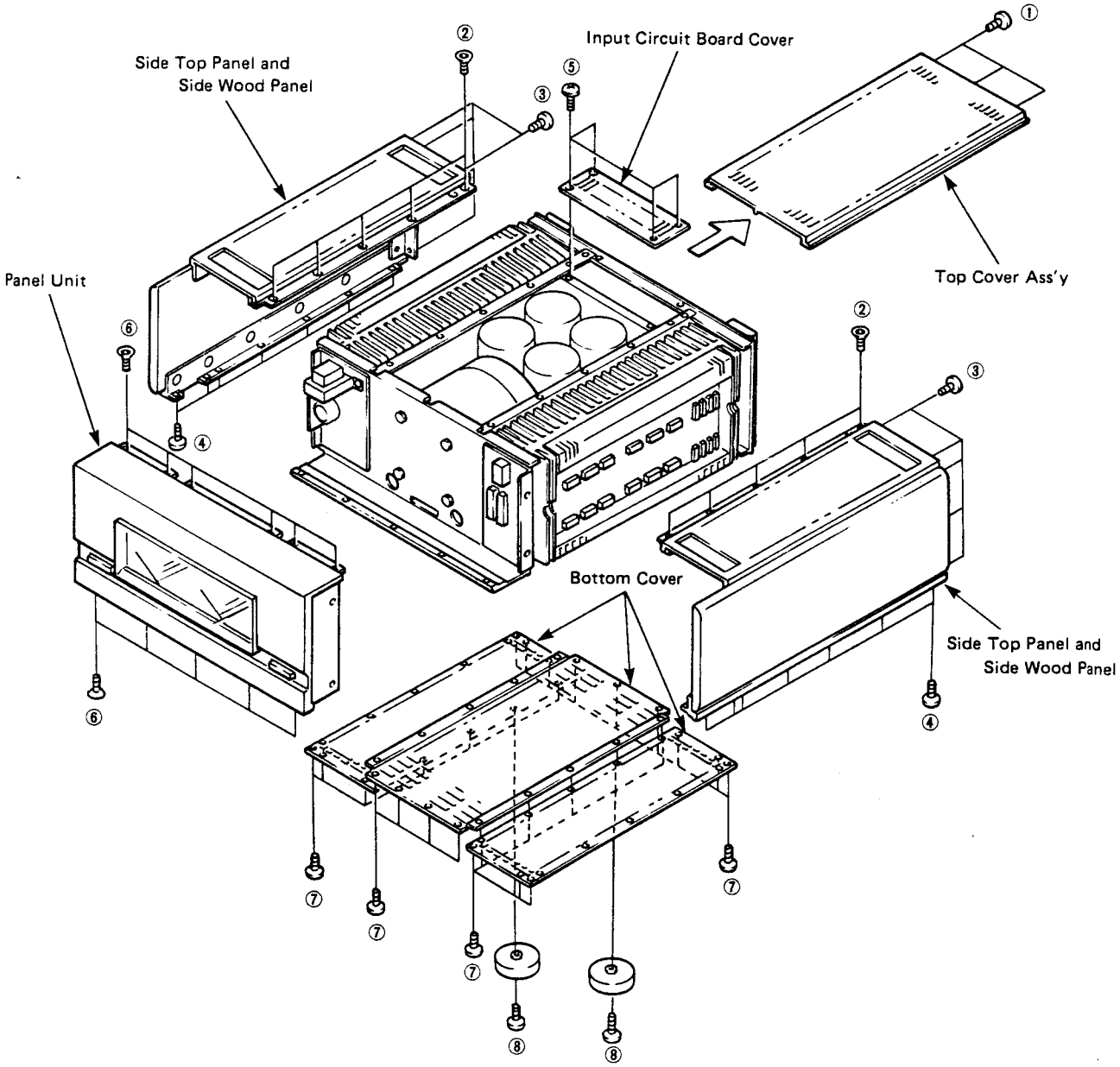

ADJUSTMENTS

• BEFORE ADJUSTMENT

1. Make sure that primary supply voltage comes within *AC120V ± 10% (U model).
   *AC220V ± 10% (G model)
2. Before turning the power ON, check to ensure that the idle current control VR501 (both L and R) in the Main Circuit Board is at its minimum position (turned counterclockwise fully).
3. Wait 3 minutes after power ON to stabilize amplifier operation without signal.

Main Circuit Board

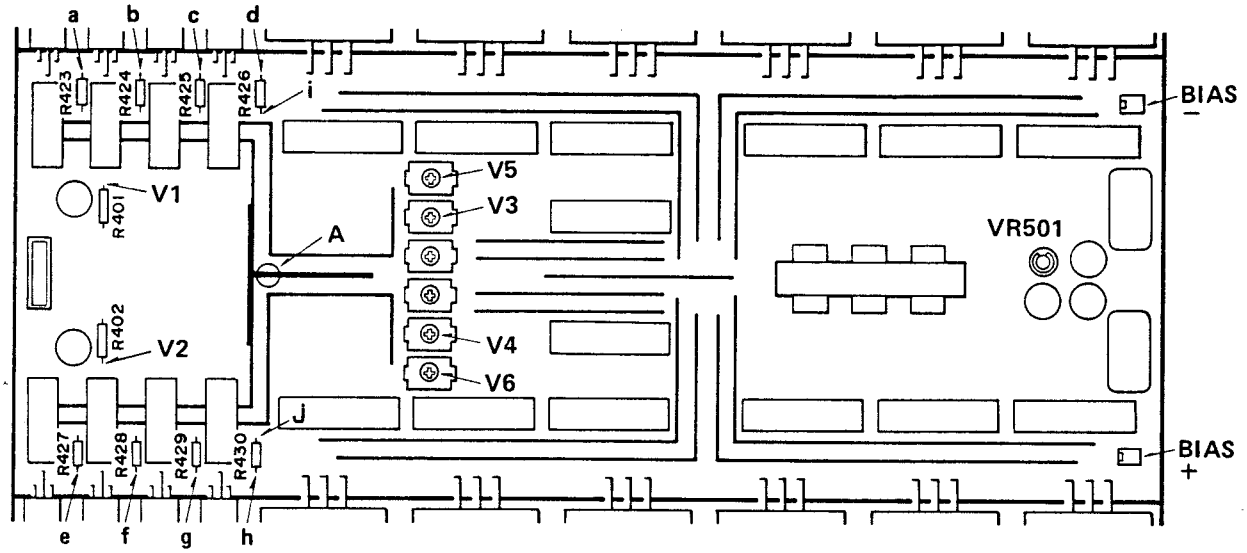

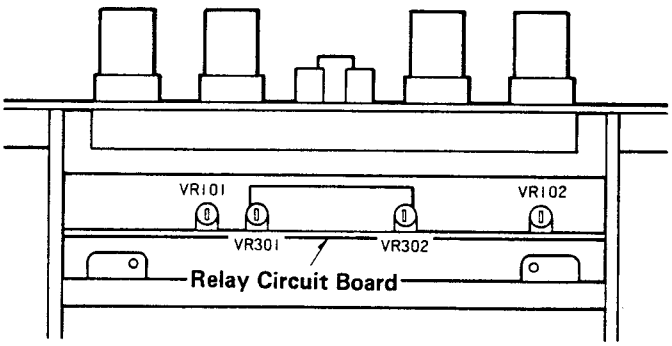

Fig. 1

Step	Item	Adjustment/Confirmation	Reference
1	DC voltage check (1)	With negative input terminal of Digital Multi Meter connected to GND terminal in rear panel of unit and positive input terminal to V1 to V6 in Main Circuit Board, check voltage at each terminal. (Do the same for both L and R of Main Circuit Board.)	V1 = +20V ± 1V V2 = −20V ± 1V V3 = +4.5V ± 0.5V V4 = −4.5V ± 0.5V V5 = −85V ± 3V V6 = +85V ± 3V
2	DC voltage check (2)	Check DC voltage as follows to confirm "A" class power primary stage idle current. (Do the same for both L and R of Main Circuit Board.) With negative input terminal of Digital Multi Meter connected to A in Fig. 1 ("A" class power primary stage output bus bar), check voltage of "a" to "j" in Main Circuit Board.	a, b, c, d = +50mV ~ +170mV e, f, g, h = −50mV ~ −170mV i = +105mV ± 30mV j = −105mV ± 30mV
3	"A", "B" class power primary stage idle current	Adjust voltage between BIAS+ terminal and BIAS− terminal in Main Circuit Board with VR501. (Do the same for both L and R of Main Circuit Board.)	25mV ± 5mV *2-pin connectors are used for BIAS+ and BIAS− terminals. Their two pins have the same electric potential.
4	DC offset adjustment	Using VR101 and VR102 in Relay Circuit Board, adjust DC offset voltage at Speaker terminal.	± 10mV or less
5	Meter adjustment	a) Make Meter "0" point adjustment without input signal. (Both L and R) b) With 1kHz input signal applied to input terminal, adjust input level so that output at Speaker terminal becomes 8Ω 100W (28.3V) and check that meter pointer aligns with 100W scale. c) If meter pointer does not align as in b), adjust with VR301 and VR302 in Relay Circuit Board.	

IC BLOCK DIAGRAM

IC301: iG09910 (Meter Driver)

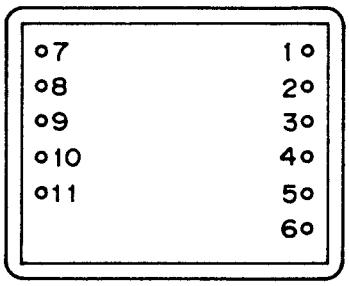

1. INPUT A
2. −12V
3. ADJUSTMENT TERMINAL (VR A)
4. ADJUSTMENT TERMINAL
5. OUTPUT A (METER R)
6. GND
7. INPUT B
8. +12V
9. ADJUSTMENT TERMINAL (VR B)
10. ADJUSTMENT TERMINAL
11. OUTPUT B (METER L)

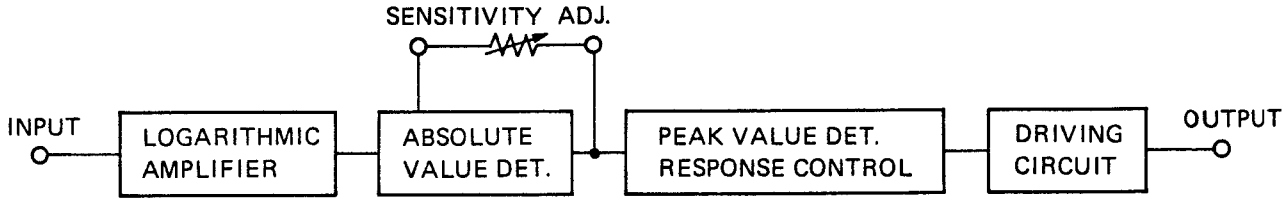

IC601: μPC78M12H (Regulator)

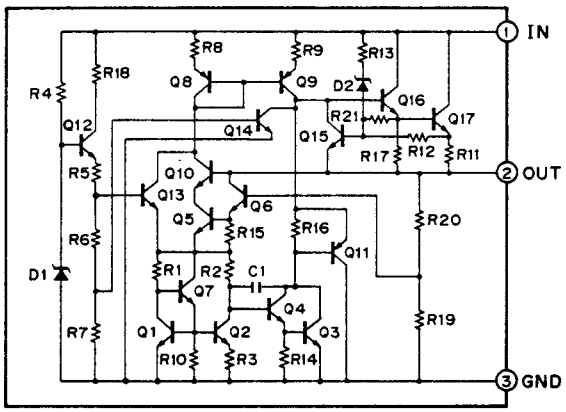

IC602: NJM79M12A (Regulator)

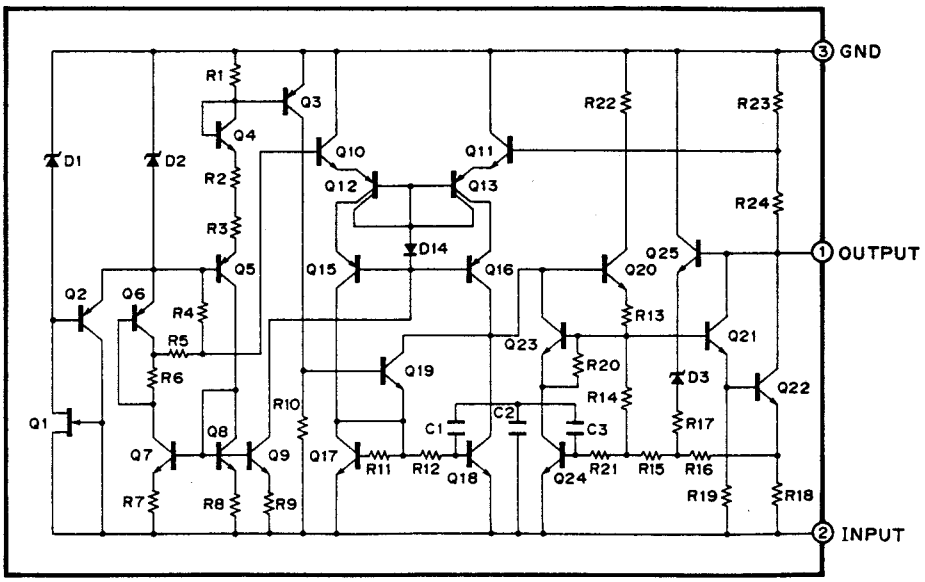

PRINTED CIRCUIT BOARD (Pattern side)

: Pattern of part side

: Pattern of solder side

: Through hole

Note) 文字面 : Component side

Main Circuit Board (L channel is the same as R channel)

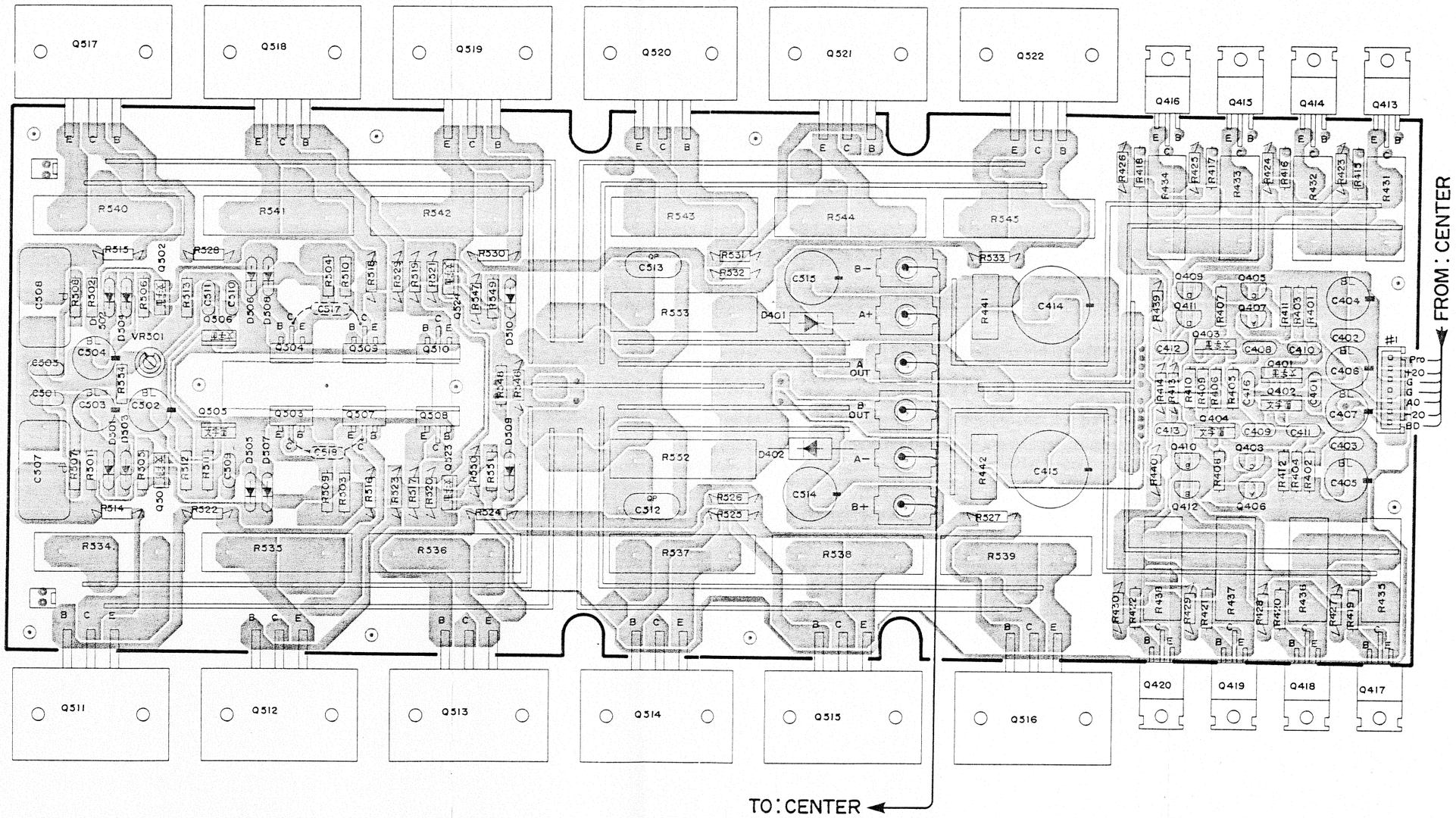

PRINTED CIRCUIT BOARD(Pattern side)

: Pattern of part side
: Pattern of soider side
: Through hole

Note) 文字面 : Component side

Center Circuit Board

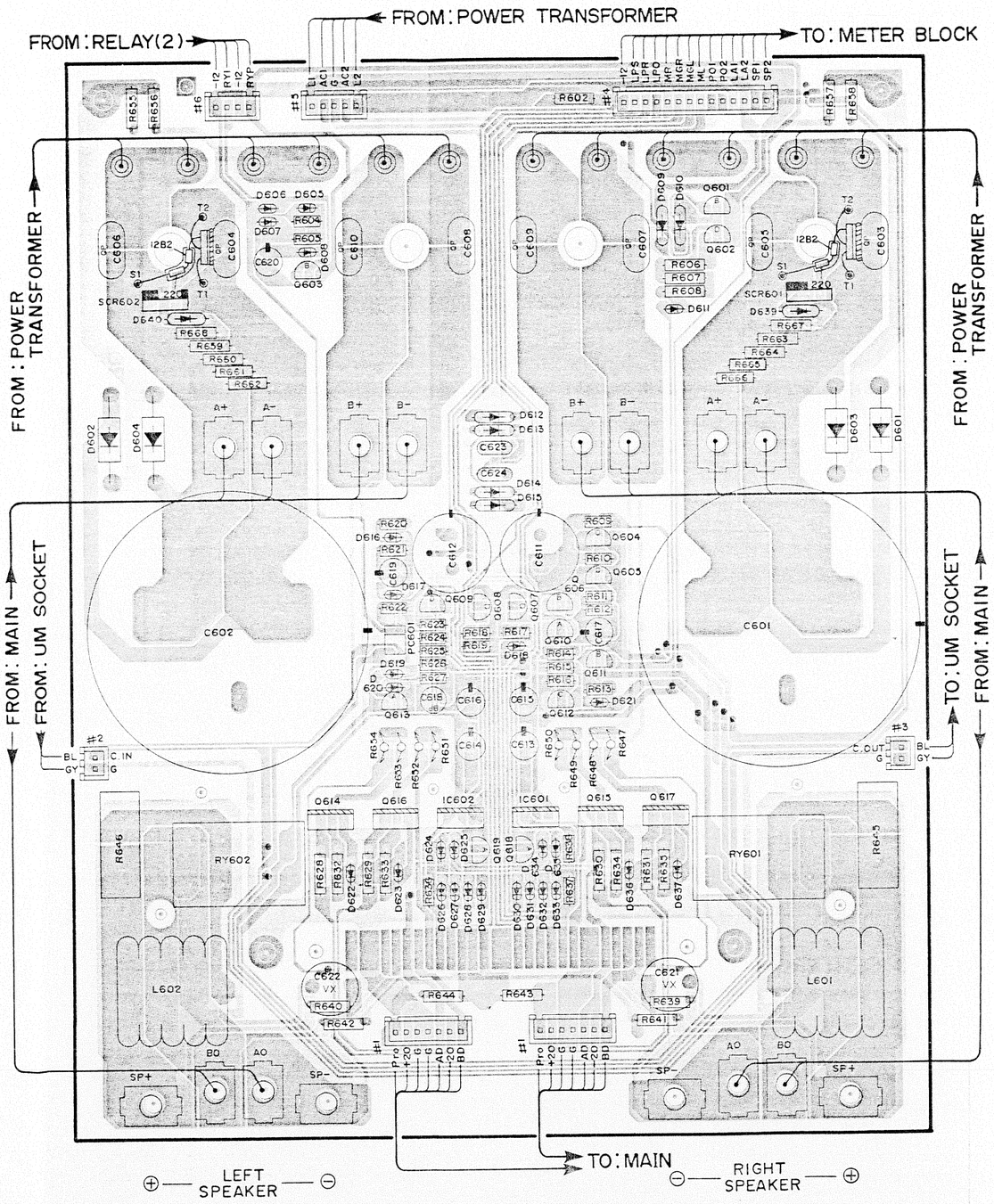

Relay Circuit Board (3)

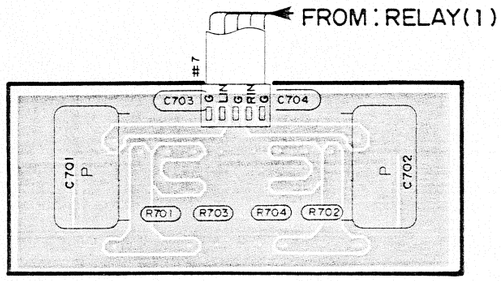

Relay Circuit Board (1)

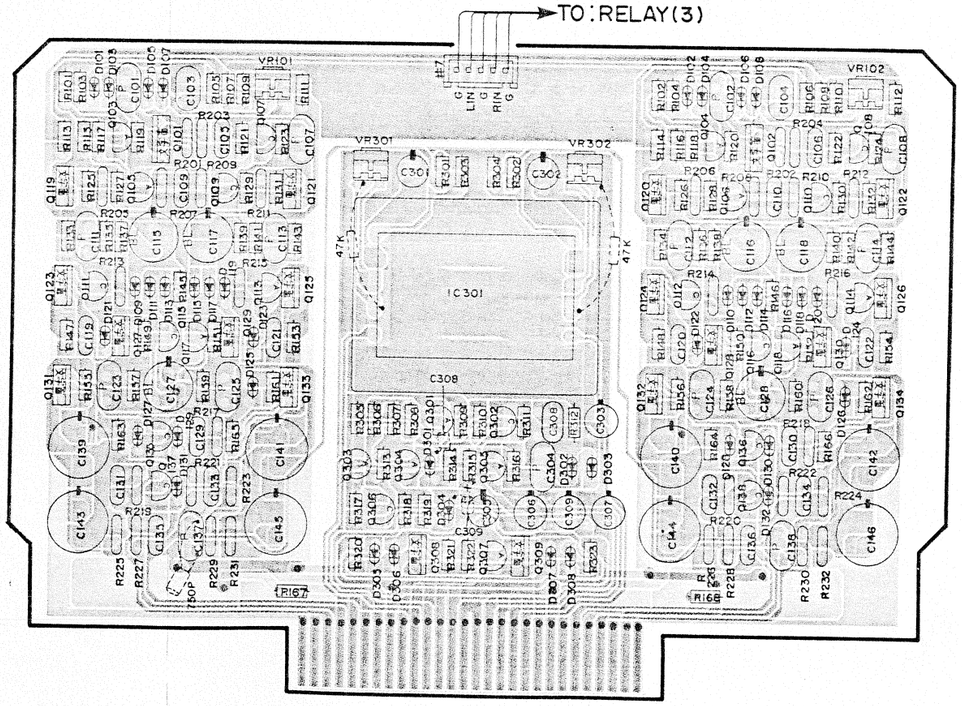

PRINTED CIRCUIT BOARD(Pattern side)

: Pattern of part side

: Pattern of solder side

: Through hole

Relay Circuit Board (2)

U MODEL

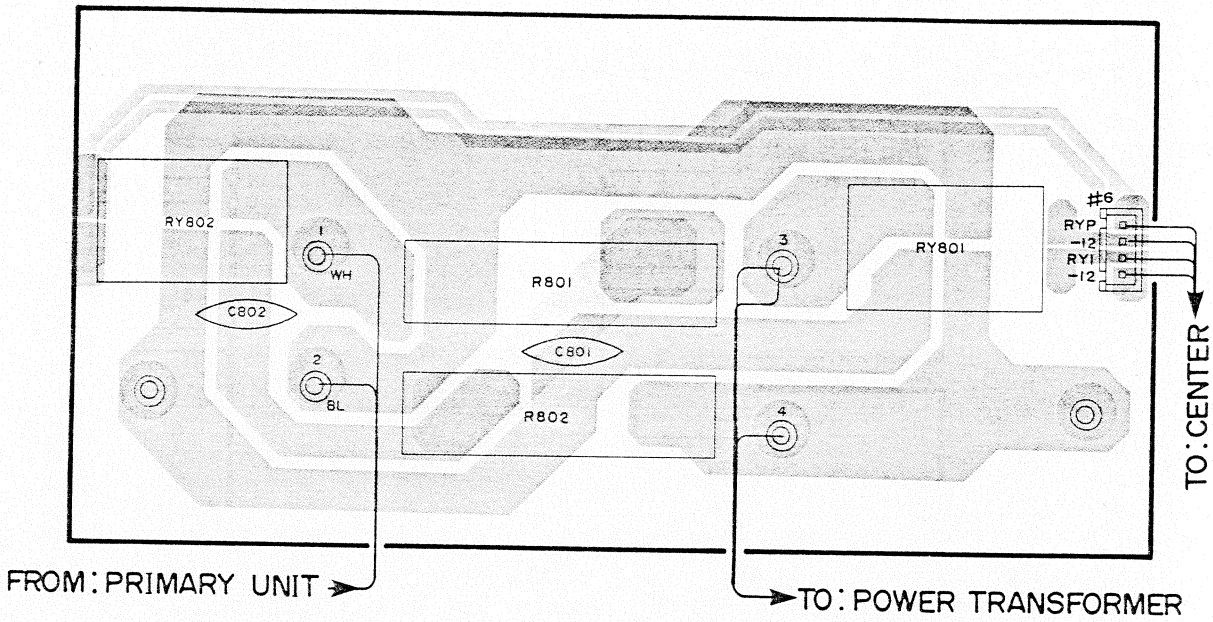

G MODEL

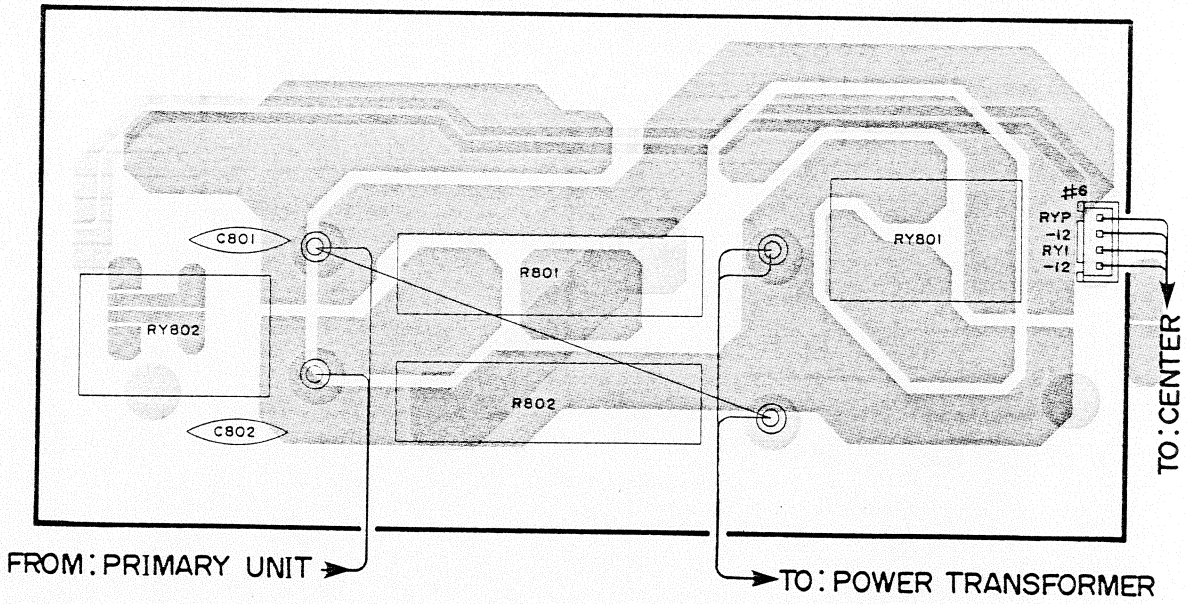

WIRING

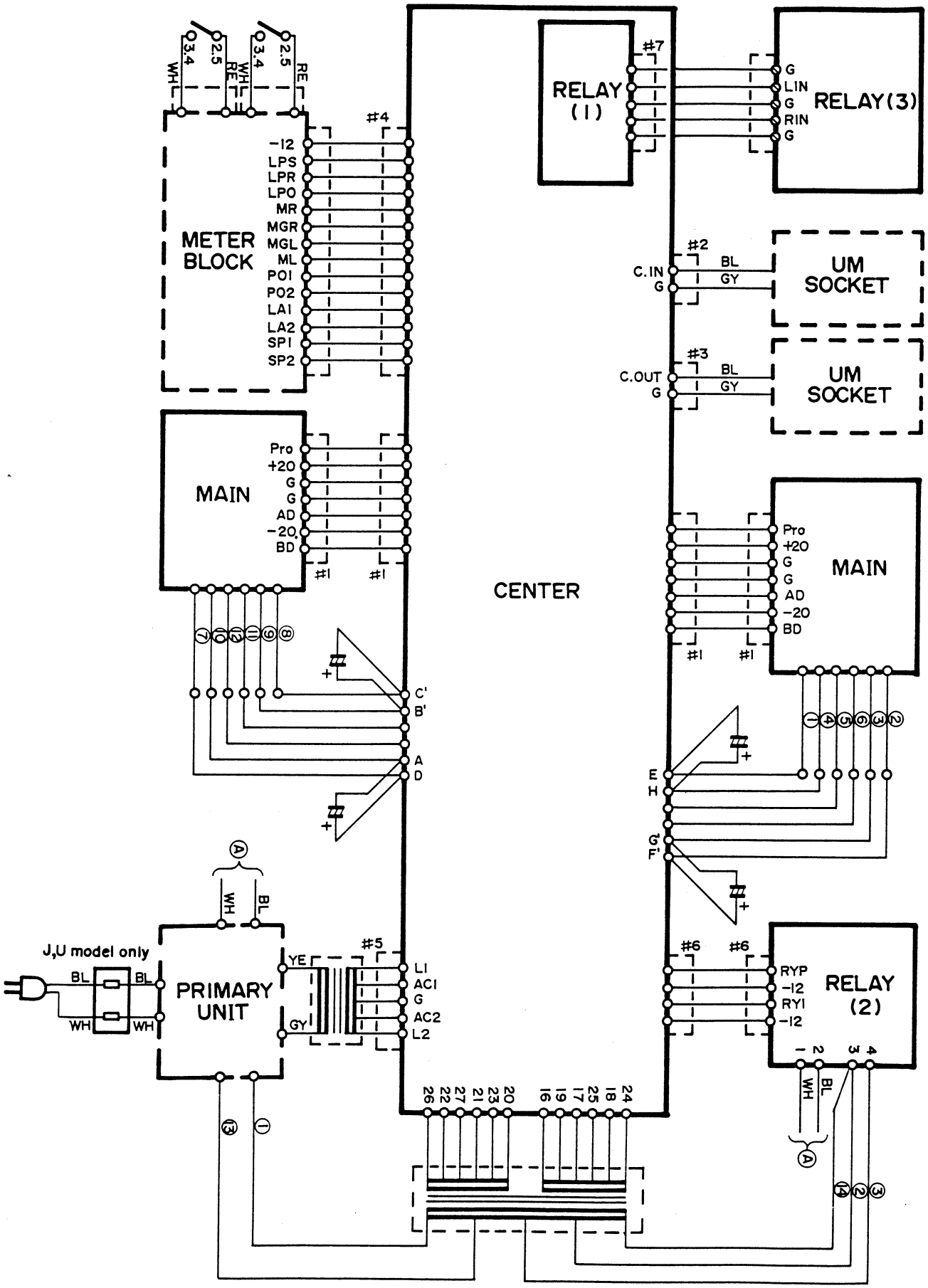
METER BLOCK
-12
LPS
LPR
LPO
MR
MGR
MGL
ML
PO1
PO2
LA1
LA2
SP1
SP2
MAIN
Pro
+20
G
G
AD
-20
BD
CENTER
RELAY (1)
RELAY(3)
G
LIN
G
RIN
G
UM SOCKET
C.IN
C.OUT
BL
GY
MAIN
RELAY (2)
RYP
-12
RY1
-12
PRIMARY UNIT
J,U model only
YE
GY
L1
AC1
AC2
L2
WH
BL
RE

SCHEMATIC DIAGRAM

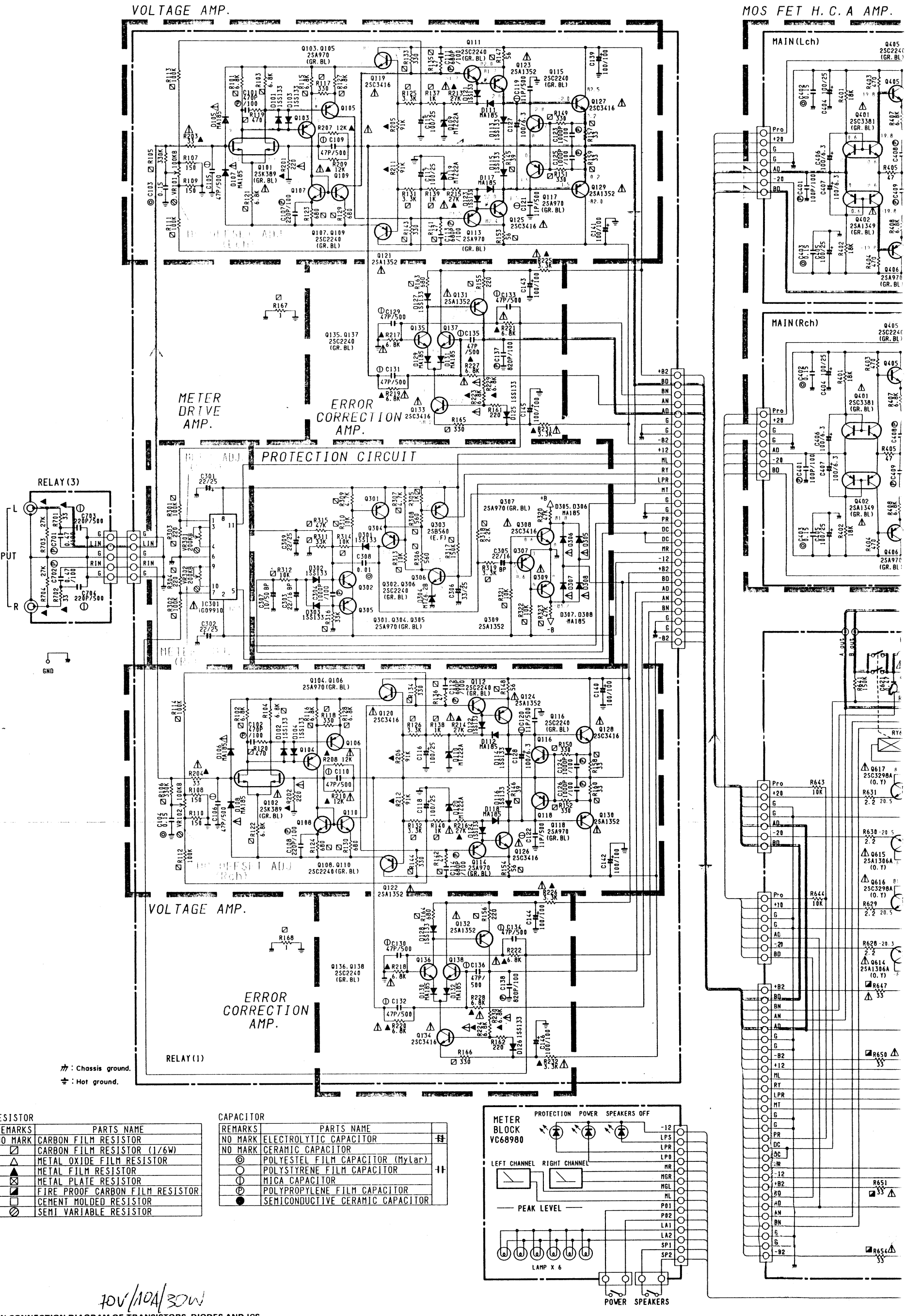

RESISTOR

REMARKS	PARTS NAME
NO MARK	CARBON FILM RESISTOR
◪	CARBON FILM RESISTOR (1/6W)
△	METAL OXIDE FILM RESISTOR
▲	METAL FILM RESISTOR
⊠	METAL PLATE RESISTOR
◪	FIRE PROOF CARBON FILM RESISTOR
□	CEMENT MOLDED RESISTOR
⊘	SEMI VARIABLE RESISTOR

CAPACITOR

REMARKS	PARTS NAME	
NO MARK	ELECTROLYTIC CAPACITOR	
NO MARK	CERAMIC CAPACITOR	
◎	POLYESTEL FILM CAPACITOR (Mylar)	
○	POLYSTYRENE FILM CAPACITOR	
Ⓘ	MICA CAPACITOR	
Ⓟ	POLYPROPYLENE FILM CAPACITOR	
●	SEMICONDUCTIVE CERAMIC CAPACITOR	

70V/10A/30W

PIN CONNECTION DIAGRAM OF TRANSISTORS, DIODES AND ICS.

2SD438 (E, F) 2SB560 (E, F) 2SA1015 (O, Y) 2SC2240 (GR, BL) 2SA970 (GR, BL) 2SB544 2SD400	2SJ123 2SK442	2SA1306A (O, A) 2SC3298A (O, Y)	2SC3416 2SA1352	2SA1358 (O, Y) 2SC3421 (O, Y)	2SA1216 (Y, P, G) 2SC2922 (Y, P, G)	2SA1349 (GR, BL) 2SC3381 (GR, BL)	2SK389 (GR, BL)	1S1555 1S2473 1SS82 MA185 MTZ6.2B MTZ22A 1SR35-100A 30D2	μPC78M12H	NJM79M12A

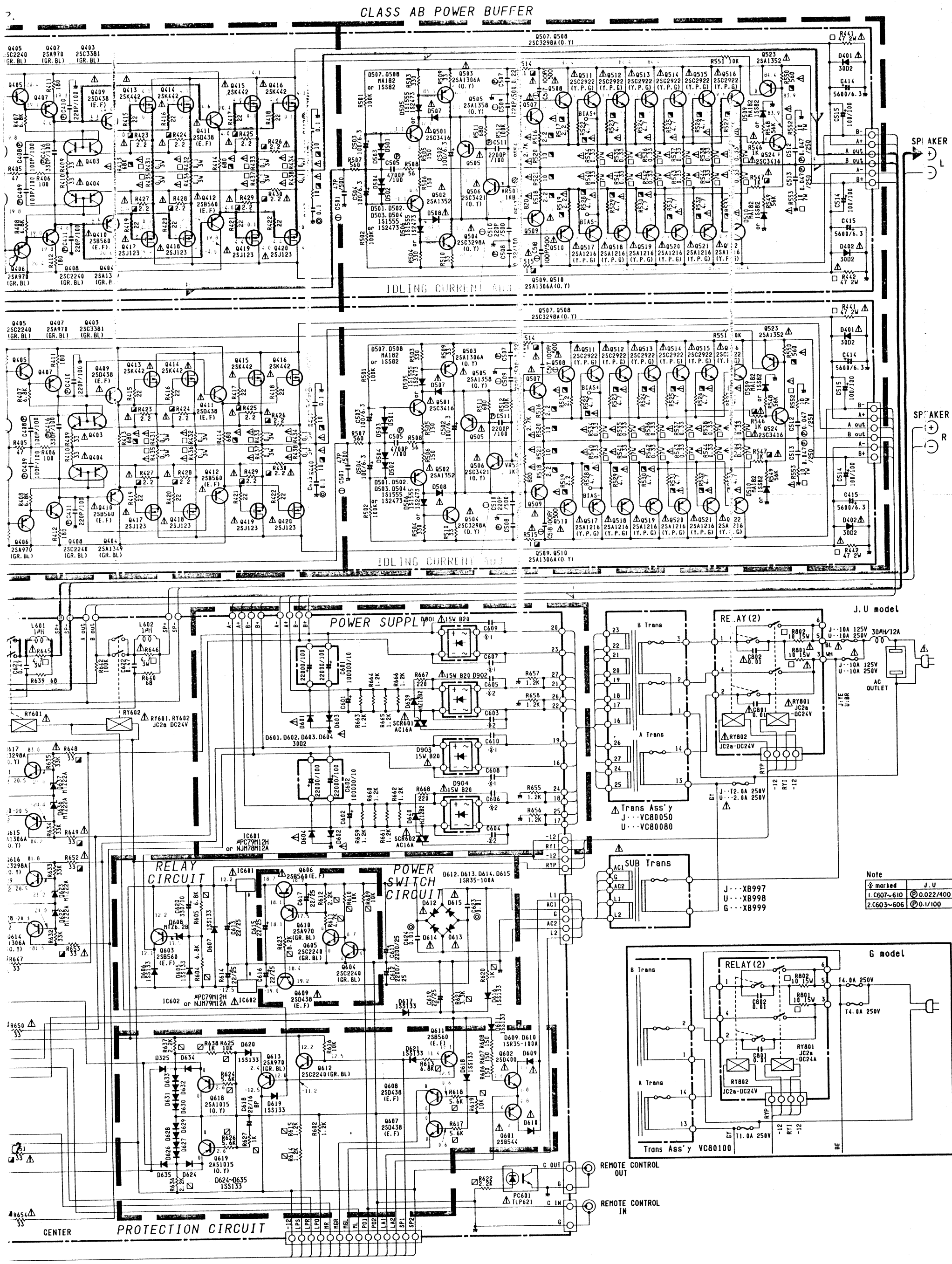

Note

※ marked	J.U	G
1. C607~610	Ⓟ 0.022/400	◎ 0.1/400
2. C603~606	Ⓟ 0.1/100	◎ 1/100

* All voltages are measured with a 10MΩ/DC electric volt meter.
* Components having special characteristics are marked ⚠ and must be replaced with parts having specifications equal to those originally installed.
* Schematic diagram is subject to change without notice.

PARTS LIST

■ELECTRICAL PARTS

■WARNING

Components having special characteristics are marked ⚠ and must be replaced with parts having specifications equal to those originally installed.

- Carbon resistors (1/6W or 1/4W) are not included in the ELECTRICAL PARTS list. For the parts No. of the carbon resistor, refer to p. 28.

MX-10000

	Ref. No.	Part No.	Description			部品名	Remarks	Common Model	Markets	ランク
※		NA 09 25 80	*Main Circuit Board*			メインシート				
		FU 35 14 70	Mica Cap.	47pF	500V	マイカコン	C501			
		FU 35 21 00	〃	100pF	500V	〃	C517,518			
		FU 35 22 20	〃	220pF	500V	〃	C509,510			
		FA 15 51 50	Mylar Cap.	0.15μF	50V	マイラーコン	C402,403			
		FA 15 51 00	〃	0.1μF	50V	〃	C412,413			
※		FC 29 44 70	Polypropylene Film Cap.	0.047μF	250V	QPコン	C512,513			
※		FC 27 52 20	〃	0.22μF	100V	〃	C507,508			
		UT 45 21 00	〃	100pF	100V	ポリプロコン	C401,408,409			
		UT 45 22 20	〃	220pF	100V	〃	C410,411			
		UT 45 23 30	〃	330pF	100V	〃	C416			
		UT 45 32 20	〃	2200pF	100V	〃	C511			
		UT 45 34 70	〃	4700pF	100V	〃	C505			
		FZ 00 54 10	Electrolytic Cap.	100μF	6.3V	ブラックゲートコン	C406,407,502～504			
		FZ 00 61 40	〃	100μF	25V	〃	C404,405			
		VD 21 57 00	〃	100μF	100V	ケミコン	C514,515			
※		VC 68 92 00	〃	5600μF	6.3V	オーディオケミコン	C414,415			
		HJ 35 42 20	Carbon Resistor	22Ω	1/4W	カーボン抵抗	R415～422			
		HJ 35 43 30	〃	33Ω	1/4W	〃	R409,410,509,510			
		HJ 35 44 70	〃	47Ω	1/4W	〃	R405			
		HJ 35 45 60	〃	56Ω	1/4W	〃	R508			
		HJ 35 51 00	〃	100Ω	1/4W	〃	R406			
		HJ 35 51 50	〃	150Ω	1/4W	〃	R505,506			
		HJ 35 51 80	〃	180Ω	1/4W	〃	R411,412			
		HJ 35 53 30	〃	330Ω	1/4W	〃	R503,504			
		HJ 35 54 70	〃	470Ω	1/4W	〃	R403,404			
		HJ 35 55 60	〃	560Ω	1/4W	〃	R507			
		HJ 35 56 80	〃	680Ω	1/4W	〃	R511			
		HJ 35 58 20	〃	820Ω	1/4W	〃	R513			
		HJ 35 62 70	〃	2.7kΩ	1/4W	〃	R554			
		HJ 35 66 80	〃	6.8kΩ	1/4W	〃	R407,408			
		HJ 35 71 00	〃	10kΩ	1/4W	〃	R551			
		HJ 35 71 80	〃	18kΩ	1/4W	〃	R401,402			
		HJ 35 75 60	〃	56kΩ	1/4W	〃	R548,549			
		HJ 35 81 00	〃	100kΩ	1/4W	〃	R501,502,512			
		HV 45 31 00	Flame Proof Carbon Resistor	1Ω	1/4W	不燃化カーボン抵抗	R514,515			⚠
		HV 45 32 20	〃	2.2Ω	1/4W	〃	R423～430, 516～519			⚠
		HV 45 34 70	〃	4.7Ω	1/4W	〃	R522～533			⚠
		HV 45 41 00	〃	10Ω	1/4W	〃	R439,440,520,521			⚠
		HV 45 55 60	〃	560Ω	1/4W	〃	R550			⚠
		HV 45 56 80	〃	680Ω	1/4W	〃	R413,414			⚠
		HV 45 61 00	〃	1kΩ	1/4W	〃	R546,547			⚠
※		VC 47 38 00	Wire Wound Resistor	47Ω	2W	セメント抵抗	R441,442			⚠
※		VC 47 31 00	〃	0.1Ω	3W	セメント無誘導抵抗	R431～438			⚠
※		VC 47 24 00	〃	0.33Ω	7W	〃	R534～545			⚠
※		VC 47 26 00	〃	10Ω	7W	〃	R552,553			⚠
※		VC 68 94 00	Pre-Set Potentiometer	B1kΩ		半固定抵抗	VR501			
		iA 09 70 00	Transistor	2SA970(GR,BL)		トランジスタ	Q406,407			
		iB 05 60 10	〃	2SB560(E,F)		〃	Q410,412			⚠
		iC 22 40 00	〃	2SC2240(GR,BL)		〃	Q405,408			

※New Parts (新規部品)

	Ref. No.	Part No.	Description		部品名	Remarks	Common Model	Markets	ランク	
		iD 04 38 10	Transistor	2SD438(E,F)	トランジスタ	Q409,411				⚠
		iX 60 85 10	〃	2SA1358(O,Y)	〃	Q505				⚠
		iX 60 85 20	〃	2SC3421(O,Y)	〃	Q506				⚠
		iA 13 52 00	〃	2SA1352	〃	Q502,523				⚠
		iC 34 16 00	〃	2SC3416	〃	Q501,524				⚠
		iA 13 06 00	〃	2SA1306A(O,Y)	〃	Q503,509,510				⚠
		iC 32 98 00	〃	2SC3298A(O,Y)	〃	Q504,507,508				⚠
		iX 60 87 40	〃	2SA1216(Y,P,G)	〃	Q517～522				⚠
		iX 60 87 50	〃	2SC2922(Y,P,G)	〃	Q511～516				⚠
		iA 13 49 00	Dual Transistor	2SA1349(GR,BL)	デュアルトランジスタ	Q402,404				⚠
		iC 33 81 00	〃	2SC3381(GR,BL)	〃	Q401,403				⚠
※		VC 69 80 00	MOS FET	2SJ123	MOS FET	Q417～420				⚠
※		VC 69 44 00	〃	2SK442	〃	Q413～416				⚠
		iF 00 00 40	Diode	1S1555	ダイオード	D501～506 inter-changeable				
		iF 00 06 70	〃	1S2473	〃	〃 inter-changeable				
		iF 00 14 00	〃	1SS82	〃	D507～510				⚠
※		VC 68 91 00	〃	30D2	〃	D401,402				⚠
※		VC 70 21 00	Heat Sink	4-TO-220	放熱シート					
※		VD 21 63 00	Base Pin	7P	XHベースピン					
※		VC 37 58 00	Terminal Plate		ターミナルプレート					
※		VC 68 99 00	Bus Bar	1L	バスバー					
※		VC 46 88 00	〃	1L-L	ベンデッドバスバー					
※		VC 41 04 00	〃	1L-R	〃					
※		VC 46 89 00	〃	2L-L	〃					
※		VC 41 05 00	〃	2L-R	〃					
※		VC 46 90 00	〃	3L-L	〃					
※		VC 41 06 00	〃	3L-R	〃					
		ED 33 00 66	Binding Head Screw	3×6 FCRM3-BI	バインド小ネジ	PACK				
		EH 13 00 80	Pan Head Sems Screw	3×8 FNM3-3g	セムスナベ小ネジ					
※		VC 41 71 00	Transistor Block		トランジスタブロック					
		EK 35 00 20	Pan Head Sems Screw	3×8 ZMC2-BI	セムスナベ小ネジ					
		ED 33 01 06	Binding Head Screw	3×10 FCRM3-BI	バインド小ネジ	PACK				

※New Parts（新規部品）

	Ref. No.	Part No.	Description		部品名	Remarks	Common Model	Markets	ランク
※		***NA 09 34 00***	***Relay Circuit Board***		リレーシート			J,U	
※		***NA 09 34 10***	*〃*		〃			G	
		Fi 38 41 00	Ceramic Cap.	0.01μF 250V	セラコン	C801,802			⚠
※		FC 27 54 70	Polypropylene Film Cap.	0.47μF 100V	ポリプロコン	C701,702			
		FU 45 11 10	Mica Cap.	11pF 500V	マイカコン	C119～122			
		FU 35 14 70	〃	47pF 500V	〃	C105,106,109,110,129～136			
		FU 35 22 20	〃	220pF 500V	〃	C703,704			
		FA 15 51 50	Mylar Cap.	0.15μF 50V	マイラーコン	C103,104			
		FA 15 41 00	〃	0.01μF 50V	〃	C308			
		UT 45 28 20	Polypropylene Film Cap.	820pF 100V	ポリプロコン	C137,138			
		UT 45 22 20	〃	220pF 100V	〃	C107,108			
		UT 45 24 70	〃	470pF 100V	〃	C101,102			
		UT 45 26 80	〃	680pF 100V	〃	C111～114			
		UT 45 31 00	〃	1000pF 100V	〃	C123～126,304			
		UJ 14 72 20	Electrolytic Cap.	22μF 25V	ケミコン	C301,302,309			
		UJ 14 73 30	〃	33μF 25V	〃	C306			
		FM 11 71 00	〃	10μF 50V	BPコン	C307			
		UK 13 72 20	〃	22μF 16V	〃	C303,305			
		VC 69 23 00	〃	100μF 100V	オーディオケミコン	C139～146			
		FZ 00 54 10	〃	100μF 6.3V	ブラックゲートコン	C127,128			
		FZ 00 61 40	〃	100μF 25V	〃	C115～118			
		HU 07 43 30	Metal Film Resistor	33Ω 1/4W	金属皮膜抵抗	R203,204,701,702			⚠
		HU 07 52 20	〃	220Ω 1/4W	〃	R201,202			
		HU 57 63 30	〃	3.3kΩ 1/4W	〃	R225,226,231,232			⚠
		HU 07 66 80	〃	6.8kΩ 1/4W	〃	R217～224, 227～230			⚠
		HU 57 71 20	〃	12kΩ 1/4W	〃	R207～210			⚠
※		HU 07 72 70	〃	27kΩ 1/4W	〃	R213～216,703,704			⚠
		HU 07 79 10	〃	91kΩ 1/4W	〃	R205,206,211,212			
		VC 68 97 00	Wire Wound Resistor	10Ω 15W	セメント抵抗	R801,802			⚠
		VC 68 95 00	Pre-Set Potentiometer	B100kΩ	半固定抵抗	VR101,102			
		VD 29 49 00	〃	B200kΩ	〃	VR301,302			
		iA 09 70 00	Transistor	2SA970(GR,BL)	トランジスタ	Q103～106,113,114,117,118,301,304,305,307			
		iA 13 52 00	〃	2SA1352	〃	Q121～124, 129～132,309			⚠
		iB 05 60 10	〃	2SB560(E,F)	〃	Q303			
		iC 22 40 00	〃	2SC2240(GR,BL)	〃	Q107～112,115,116,135～138,302,306			
		iC 34 16 00	〃	2SC3416	〃	Q119,120,125～128,133,134,308			⚠
		iE 10 45 00	Dual FET	2SK389(GR,BL)	デュアルFET	Q101,102			⚠
		iF 00 34 50	Diode	1SS133	ダイオード	D101～104,113～116,121～128,301～303			
		VC 39 84 00	〃	MA185	〃	D105～108,111,112,117,118,129～132,305～308			⚠
		iF 01 07 40	Zener Diode	MTZ6.2B	ツェナーダイオード	D304			
		iF 00 90 30	〃	MTZ22A	〃	D109,110,119,120			
		iG 09 91 00	IC	iG09910	IC	IC301			⚠
※		VD 45 02 00	Relay	JC2a-DC24V	リレー	RY801,802			⚠
※		VD 21 61 00	Base Pin	5P	XHベースピン				
		LB 91 80 40	〃	4P i-Type	〃				
※		VC 41 07 00	Terminal Post		ターミナルポスト				

※New Parts（新規部品）

	Ref. No.	Part No.	Description		部品名	Remarks	Common Model	Markets	ランク
※		NA 09 26 00	Center Circuit Board		センターシート			J,U	
※		NA 09 56 80	〃		〃			G	
※		FC 31 42 20	Polypropylene Film Cap.	0.022μF 400V	QPコン	C607～610		J,U	
		VE 01 30 00	Mylar Cap.	0.1μF 400V	マイラーコン	〃		G	
※		FC 27 51 00	Polypropylene Film Cap.	0.1μF 100V	QPコン	C603～606			
		VE 01 29 00	Mylar Cap.	1μF 100V	マイラーコン	〃		G	
		FA 15 41 00	〃	0.01μF 50V	〃	C623,624			
		FZ 00 37 40	〃	0.47μF	〃	C621,622			
		UJ 14 92 20	Electrolytic Cap.	2200μF 25V	ケミコン	C611,612			
		UJ 14 72 20	〃	22μF 25V	〃	C613～617,619			
		UJ 42 83 30	〃	330μF 10V	〃	C620			
※		VC 47 52 00	〃	100000μF 10V	〃	C601,602			
		UK 13 72 20	〃	22μF 16V	BPコン	C618			
		HJ 35 32 20	Carbon Resistor	2.2Ω 1/4W	カーボン抵抗	R628～631			
		HJ 35 46 80	〃	68Ω 1/4W	〃	R639,640			
		HJ 35 51 50	〃	150Ω 1/4W	〃	R606～608			
		HJ 35 52 20	〃	220Ω 1/4W	〃	R667,668			
		HJ 35 61 20	〃	1.2kΩ 1/4W	〃	R602,655～666			
		HJ 35 71 00	〃	10kΩ 1/4W	〃	R643,644			
		HJ 35 73 30	〃	33kΩ 1/4W	〃	R632～635			
		HJ 35 81 00	〃	100kΩ 1/4W	〃	R642			
		HJ 35 81 50	〃	150kΩ 1/4W	〃	R641			
※		VC 47 27 00	Wire Wound Resistor	4.7Ω 3W	セメント抵抗	R645,646			⚠
		HV 45 43 30	Flame Proof Carbon Resistor	33Ω 1/4W	不燃化カーボン抵抗	R647～654			⚠
		GD 90 03 20	Coil	1μH	出力コイル	L601,602			
		iA 13 06 00	Transistor	2SA1306A(O,Y)	トランジスタ	Q614,615			⚠
		iC 32 98 00	〃	2SC3298A(O,Y)	〃	Q616,617			⚠
		iB 05 44 10	〃	2SB544	〃	Q601			⚠
		iB 05 60 10	〃	2SB560(E,F)	〃	Q603,606,611			⚠
		iD 04 00 10	〃	2SD400	〃	Q602			⚠
		iD 04 38 10	〃	2SD438(E,F)	〃	Q607～609			⚠
		iA 10 15 21	〃	2SA1015(Y)	〃	Q618,619			
		iA 09 70 00	〃	2SA970(GR,BL)	〃	Q610,613			
		iC 22 40 00	〃	2SC2240(GR,BL)	〃	Q604,605,612			
		iG 04 67 00	IC	μPC78M12H	IC	IC601			⚠
		XB 25 00 01	〃	NJM79M12A	〃	IC602			⚠
		iH 00 14 30	Diode	ISR35-100A	ダイオード	D609,610,612～615			⚠
※		VC 68 91 00	〃	30D2	〃	D601～604			⚠
		iF 01 07 40	Zener Diode	MTZ6.2B	ツェナーダイオード	D608			
		iF 00 90 30	〃	MTZ22A	〃	D622,623,636,637			
		iF 00 23 50	〃	HZ12B2	〃	D639,640			
		iF 00 34 50	Diode	1SS133	ダイオード	D605～607,611,616～621,624～635			
※		VC 69 46 00	Photo Coupler	TLP621	フォトカプラ	PC601			⚠
		KC 00 16 10	Relay	JC2a-DC24V	リレー	RY601,602			⚠
		iH 00 10 50	Triac	AC16DGML	トライアック	SCR601,602			⚠

※New Parts（新規部品）

	Ref. No.	Part No.	Description		部品名	Remarks	Common Model	Markets	ランク
※		VC 78 22 00	Heat Sink	6-TO-220	放熱シート				
		LB 91 80 20	Base Pin	2P	XHベースピン				
※		VD 21 63 00	〃	7P i-Type	〃				
		LB 91 80 40	〃	4P i-Type	〃				
		LB 91 80 50	〃	5P i-Type	〃				
		LB 91 81 40	〃	14P i-Type	〃				
※		VC 68 70 00	Connector	56P	コネクター				
※		VC 37 58 00	Terminal Plate		ターミナルプレート				
※		VC 41 07 00	Terminal Post		ターミナルポスト				
※		VC 78 42 00	Heat Sink		ラジエター				
※		VC 78 43 00	Spacer		絶縁スペーサ				
		CB 07 28 80	Washer		絶縁ワッシャー				
		EK 01 00 20	Pan Head Sems Screw	2.6×8 ZMC2-Y	セムスナベ小ネジ				
		EX 60 05 00	〃	3×12 FCRM3-3G	〃				
		EV 10 00 36	Hexagonal Nut	M3	六角ナット	PACK			
		EL 32 60 80	Pan Head Sems Screw	2.6×8 ZMC2-BI	セムスナベ小ネジ				

※New Parts（新規部品）

EXPLODED VIEW

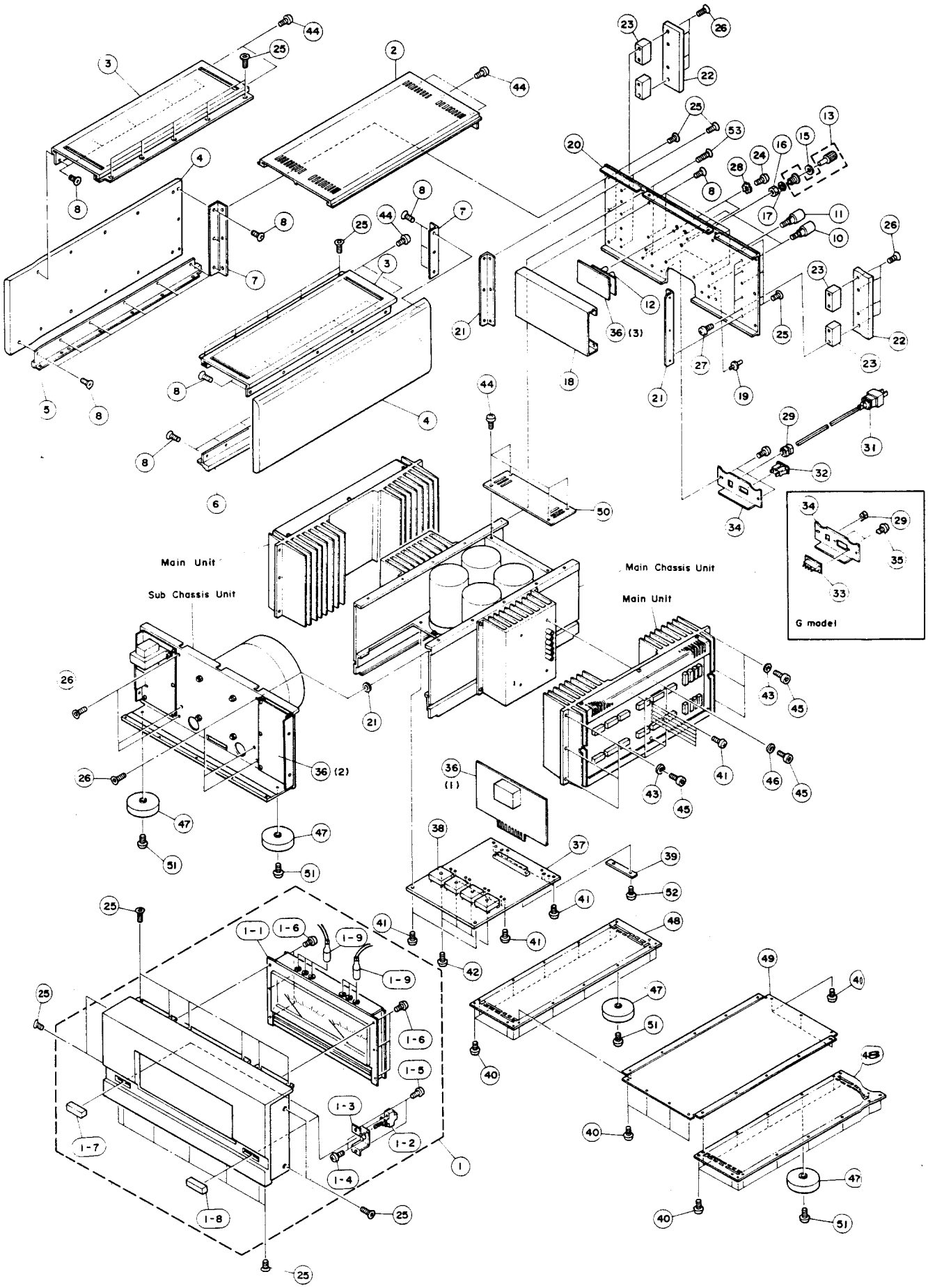

MECHANISM PARTS

Note) φ : Diameter

	Ref. No.	Part No.	Description		部品名	Remarks	Common Model	Markets	ランク
※	1	VC 54 90 00	Panel Unit		パネルユニット				
※	1-1	VC 68 98 00	Meter Ass'y		メーター Ass'y				
※	1-2	VC 78 30 00	Push Switch	2-2	プッシュスイッチ	POWER,SPEAKERS			
※	1-3	VC 41 24 00	Holder, Switch		スイッチホルダー	POWER,SPEAKERS			
	1-4	ED 33 00 66	Binding Head Screw	3×6 FCRM3-BI	バインド小ネジ				
	1-5	ED 34 00 66	〃	4×6 FCRM3-BI	〃	PACK			
	1-6	EX 60 05 70	Flat Head Screw with Hex. Hole	4×8 FCRM	六角穴付皿小ネジ				
※	1-7	VC 41 13 00	Push Button		プッシュボタン	POWER			
※	1-8	VC 41 14 00	〃		〃	SPEAKERS			
※	1-9	JB 00 11 00	Lamp, Meter	150mA 8V	メーターランプ				
※	2	VC 54 93 00	Top Cover Ass'y		トップカバー Ass'y				
※	3	VC 54 92 00	Side Top Panel L & R		サイドトップパネル				
※	4	VD 30 43 00	Side Wood Panel (L,R set)		サイドウッドパネル (L,Rセット)				
※	5	VC 41 26 00	Side Escutcheon L		サイドエスカッションL				
※	6	VC 41 27 00	〃 R		〃 R				
※	7	VC 41 15 00	Holder, Side Panel		サイドパネルホルダー				
	8	ER 33 11 66	Flat Head Wood Screw	3.1×16 FCRM3	皿木ネジ				
※	10	VC 68 39 00	Speaker Terminal +		スピーカーターミナル+				
※	11	VC 68 40 00	〃 −		〃 −				
※	12	VC 69 49 00	Pin Jack	2P	ピンジャック				
※	13	VC 68 77 00	Ground Terminal Ass'y		アース端子 Ass'y				
	15	EX 60 06 00	Plain Washer	φ4 AUメッキ	平座金				
	16	EX 60 06 20	Hexagonal Nut	8×0.75 AUメッキ	六角ナット				
	17	EX 60 06 40	Toothed Lock Washer	8S AUメッキ	歯付座金				
※	18	VC 68 42 00	Sheild Plate		シールドプレート				
※	19	VC 78 31 00	UM Socket		UMソケット				
※	20	VC 41 42 00	Rear Panel		リアパネル				
※	〃	VC 41 43 00	〃		〃			J	
※	〃	VC 41 45 00	〃		〃			U	
※	21	VC 41 48 00	Holder, Heat Sink		ラジエターホルダー			G	
※	22	VC 86 93 00	Protector, Rear Panel		リアパネルプロテクター				
※	23	VC 86 95 00	Protector Base		プロテクターベース				
	24	EJ 33 00 86	Binding Head Tapping Screw	3×8 FCRM3-BI	バインドタッピングネジ	PACK			
	25	EX 60 05 70	Flat Head Screw with Hex. Hole	4×8 FCRM3	六角穴付皿小ネジ				
	26	EX 60 05 80	〃	4×20 FCRM3	〃				
	27	ED 34 01 66	Binding Head Screw	4×16 FCRM3-BI	バインド小ネジ	PACK			
	28	EV 42 20 36	Toothed Lock Washer	φ3	歯付座金	PACK			
	29	CB 80 68 50	Cord Stopper	SR-6N3-4	コードストッパー			U	
	〃	CB 07 27 50	〃	SR-4N-4	〃			G	
	31	VE 01 31 00	Power Cord	13A 125V	電源コード			U	⚠
	〃	MG 00 09 10	〃	6A 250V 2m	〃			G	⚠
	〃	MG 00 21 70	〃	15A 125V 2m	〃			J	⚠
	32	LB 20 30 60	AC Outlet		ACアウトレット			J,U	⚠
※	33	VB 45 17 00	Lug Terminal	2P	ラグ端子			G	
※	34	VC 42 14 00	AC Cord Panel		ACコードパネル			J	
※	〃	VC 42 15 00	〃		〃			U	
※	〃	VC 42 17 00	〃		〃			G	
	35	ED 33 00 86	Binding Head Screw	3×8 FCRM3	バインド小ネジ	PACK			
※	36	NA 09 34 00	Relay Circuit Board (Amp.)		リレーシート			J,U	
	〃	NA 09 34 10	〃		〃			G	
※	37	NA 09 26 00	Center Circuit Board		センターシート			J,U	
※	〃	NA 09 56 80	〃		〃			G	
※	38	VC 68 93 00	Diode	15WB20	ダイオード				⚠

※New Parts (新規部品)

	Ref. No.	Part No.	Description		部品名	Remarks	Common Model	Markets	ランク
※	39	VC 78 63 00	Holder, Cord		コードホルダー				
	40	EC 34 00 86	Truss Head Screw	4×8 ZMC2-BI	トラス小ネジ	PACK			
	41	EX 60 05 60	Sems Pan Head Screw	4×8 BS-AUメッ	セムスナベ小ネジ				
	42	EX 60 05 50	〃	4×14 BNM3	〃				
	43	EV 20 30 46	Flat Washer	φ4	皿ワッシャー	PACK			
	44	EC 34 00 86	Truss Head Screw	4×8 FCRM3-BI	トラス小ネジ	PACK			
	45	EX 60 06 50	Cap Screw	4×14 クロ染メ	キャップスクリュー				
	46	EX 60 06 10	Sems Plain Washer	φ4	セムス平座金				
※	47	VC 41 39 00	Amp. Leg Ass'y		アンプレッグ Ass'y				
	48	VC 41 41 00	Bottom Cover (Side)		ボトムカバー				
	49	VC 41 40 00	〃 C		〃 C				
	50	VC 42 20 00	Cover, Input Circuit Board		インプットシートカバー				
	51	EX 60 06 80	Cap Screw	4×20 クロ染メ	キャップスクリュー				
	52	EX 60 04 90	Sems Pan Head Screw	2.6×8 FCRM3-BI	セムスナベ小ネジ				
	53	EX 60 06 70	Flat Head Screw with Hex. Hole	4×14 FCRM3	六角穴付皿小ネジ				
		CB 06 92 50	Binding Tie	BK-1	インシュロックタイ				
		VD 95 90 00	Insulator		インシュレーター				
			Accessories		付属品				
※		VC 78 13 00	− Slotted Screwdriver		−時計ドライバー				
※		VC 78 39 00	Control Cable		コントロールケーブル				
		PB 06 53 30	Polishing Cloth		ポリシングクロス				

※New Parts (新規部品)

■EXPLODED VIEW(Main Chassis Ass'y)

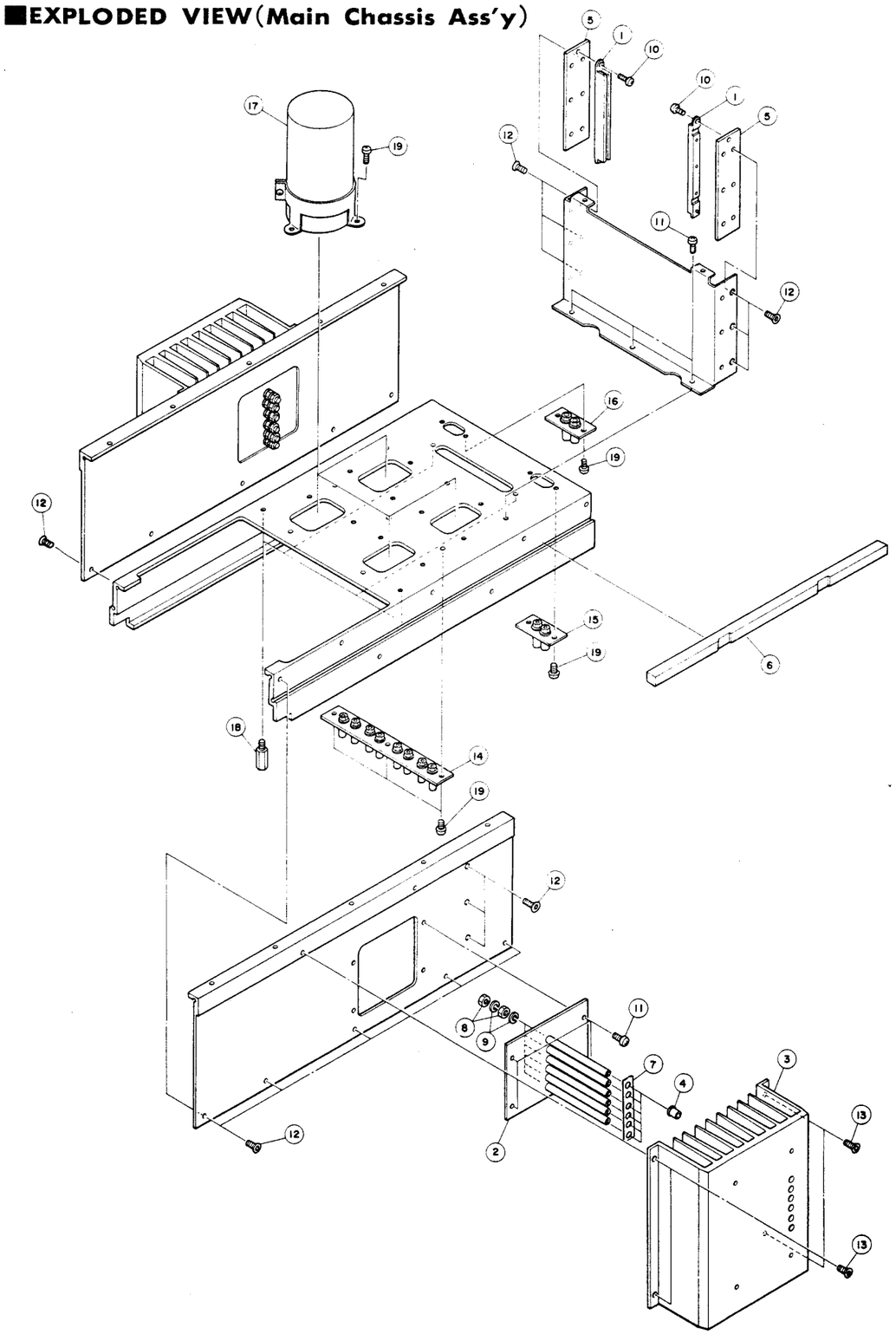

■MECHANISM PARTS(Main Chassis Ass'y)

	Ref. No.	Part No.	Description		部品名	Remarks	Common Model	Markets	ランク
※	1	VC 69 03 00	Card Rail		カードレール				
※	2	VC 55 04 00	Terminal, Long		ターミナル Long				
※	3	VC 41 53 00	Sub Heat Sink		サブラジエター				
※	4	VC 41 74 00	Insulation Washer		絶縁座金				
※	5	VC 41 73 00	Spacer, Card Rail		カードレールスペーサー				
※	6	VC 78 41 00	Cork Damper		コルクダンパー				
※	7	VD 05 74 00	Post Adjuster		ポストアジャスター				
※	8	EX 60 06 30	Hexagonal Nut	M4 AUメッキ	六角ナット				
※	9	EX 60 06 10	Sems Plain Washer	φ4 AUメッキ	セムス平座金				
	10	ED 33 00 66	Binding Head Screw	3×6 FCRM3-BI	バインド小ネジ	PACK			
	11	EC 34 00 86	Truss Head Screw	4×8 FCRM3-BI	トラス小ネジ	PACK			
	12	EX 60 05 70	Flat Head Screw with Hex. Hole	4×8 FCRM3-3g	六角穴付皿小ネジ				
	13	EX 60 05 90	〃 〃	4×10 クロ染メ	〃				
※	14	VC 55 05 00	Terminal Post	8P	ターミナルポスト				
※	15	VC 55 07 00	〃	SPL	〃				
※	16	VC 55 09 00	〃	SPR	〃				
※	17	VC 47 51 00	Electrolytic Cap.	22000μF 100V	ブロックケミコン				
※	18	VC 41 75 00	P.C.B. Post		P. C. B. ポスト				
	19	ED 34 00 66	Binding Head Screw	4×6 FCRM3-BI	バインド小ネジ	PACK			

※New Parts (新規部品)

■EXPLODED VIEW(Main Unit)

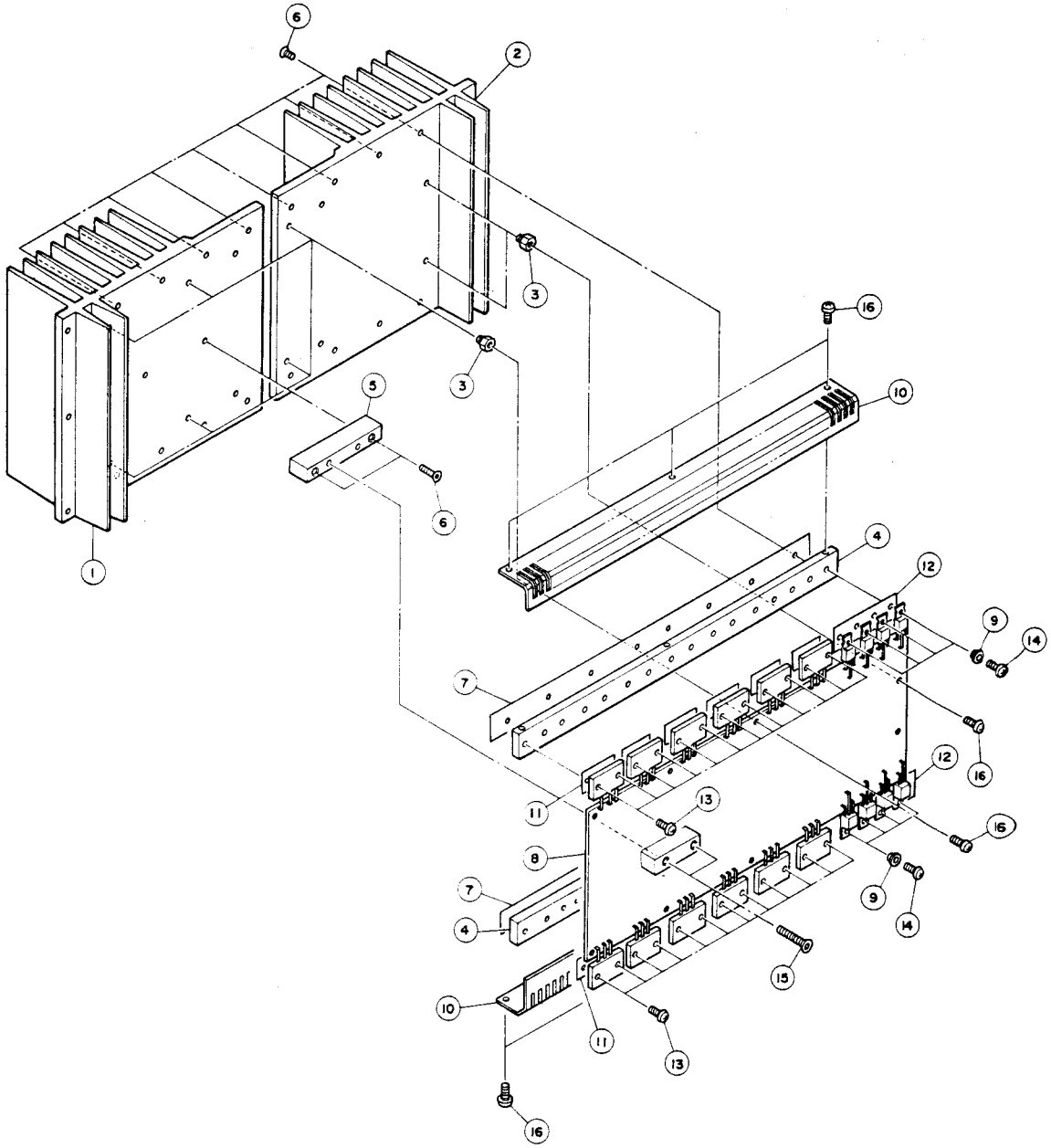

	Ref. No.	Part No.	Description		部品名	Remarks	Common Model	Markets	ランク
※	1	VC 41 56 00	Heat Sink A		ラジエターA				
※	2	VC 41 60 00	〃 B		〃 B				
※	3	VD 03 26 00	P.C.B. Post	L=8.4	P.C.B.ポスト				
※	4	VC 41 70 00	Transistor Block	Long	トランジスタブロック				
※	5	VC 68 41 00	Joint Plate		ジョイントプレート				
	6	EX 60 05 90	Flat Head Screw with Hex. Hole	4×10	六角穴付皿小ネジ				
	7	VD 30 17 00	Radiation Sheet	TR Block	放熱シート				
※	8	NA 09 25 80	Main Circuit Board		メインシート				
	9	CB 62 35 10	Insulation Bush		絶縁ブッシュ				
※	10	VC 41 76 00	Main Cover		メインカバー				
※	11	VC 70 22 00	Radiation Sheet	TO-3 ジャンボ	放熱シート				
※	12	VC 70 21 00	〃	4-TO-220	〃				
	13	EX 60 05 40	Sems Pan Head Screw	3×10 BNM3-3g	セムスナベ小ネジ				
	14	EX 60 04 90	〃	2.6×8 BNM3-3g	〃				
	15	EB 04 04 06	Flat Head Screw	4×40 ZMC2-Y	皿小ネジ	PACK			
	16	ED 33 00 66	Binding Head Screw	3×6 FCRM3-BI	バインド小ネジ	PACK			

※New Parts（新規部品）

EXPLODED VIEW(Sub Chassis Unit)

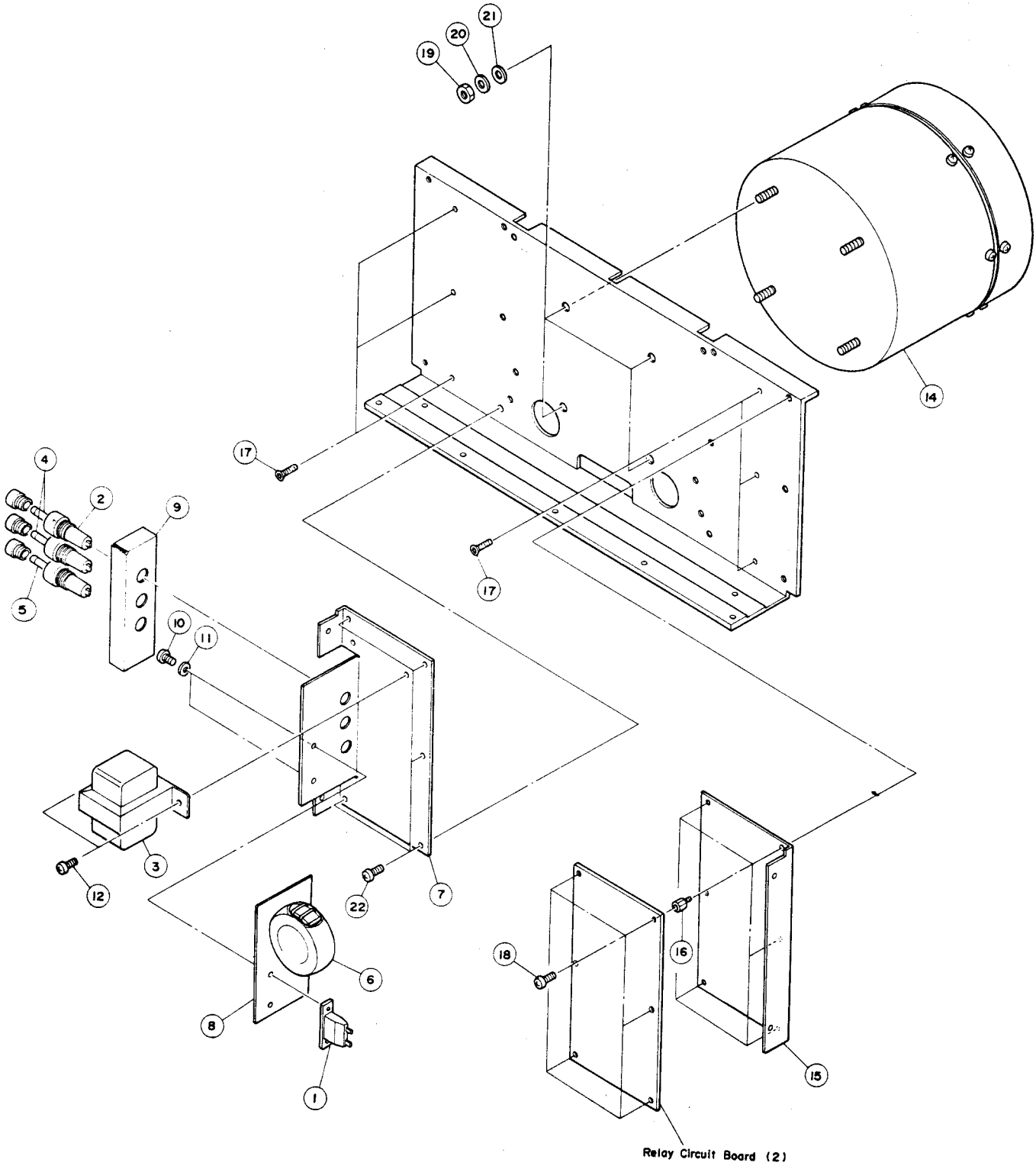

■MECHANISM PARTS(Sub Chassis Unit)

	Ref. No.	Part No.	Description		部品名	Remarks	Common Model	Markets	ランク	
	1	VB 45 17 00	Lug Terminal	2P	ラグ端子			J,U,G		
※	2	VC 78 33 00	Holder, Fuse	FHO32 VU	ヒューズホルダー			J,U		
※	〃	VC 78 34 00	〃	FHO33 VG	〃			G		
※	3	XB 99 70 02	Sub Transformer		サブトランス			J		⚠
※	〃	XB 99 80 02	〃		〃			U		⚠
※	〃	XB 99 90 02	〃		〃			G		⚠
	4	KB 00 01 80	Fuse	10A 125V	ヒューズ			J		⚠
	〃	KB 00 13 90	〃	10A 250V	〃			U		⚠
※	〃	KB 00 07 90	〃	T4.0A 250V	〃			G		⚠
	5	KB 00 02 30	〃	T2.0A 125V	〃			J		⚠
	〃	KB 00 10 30	〃	2.0A 250V	〃			U		⚠
	〃	KB 00 07 30	〃	T1.0A 250V	〃			G		⚠
	6	VD 04 78 00	Choke Coil	30μH 12A	チョークコイル					
※	7	VC 41 25 00	AC PRIM. Board		ACPRIM.ボード					
※	8	VD 02 13 00	Coil Insulator		コイルインシュレーター			J,U		
※	9	VC 72 03 00	Panel, Fuse		ヒューズパネル					
	10	Ei 33 00 86	Binding Head Tapping Screw	3×8 FCRM3-BI	バインドタッピングネジ	PACK				
	11	EV 20 30 36	Plain Washer	φ3 ZMC2-BI	平座金	PACK				
	12	ED 34 00 86	Binding Head Tapping Screw	4×8	バインドタッピングネジ	PACK				
※	14	VC 80 05 00	Power Transformer Ass'y		電源トランスAss'y			J		⚠
※	〃	VC 80 08 00	〃		〃			U		⚠
※	〃	VC 80 10 00	〃		〃			G		⚠
※	15	VC 72 04 00	Insulator Sheet		絶縁シート					
※	16	VC 72 01 00	P.C.B. Post	L=7	P.C.B.ポスト					
	17	EX 60 05 70	Flat Head Screw with Hex. Hole	4×8 FCRM3	六角穴付皿小ネジ	PACK				
	18	ED 33 00 66	Binding Head Screw	3×6 FCRM3	バインド小ネジ	PACK				
	19	EV 10 30 66	Hexagonal Nut	M6 FCRM3	六角ナット	PACK				
	20	EV 30 30 66	Sems Plain Washer	φ6 FCRM3	セムス平座金	PACK				
	21	EV 20 30 66	Plain Washer	φ6 FCRM3-BI	平座金	PACK				
	22	ED 34 00 66	Binding Head Screw	4×6 FCRM3-BI	バインド小ネジ	PACK				

※New Parts (新規部品)

Parts List for Carbon Resistor

Value	1/4W Type Part No.	1/6W Type Part No.	Value	1/4W Type Part No.	1/6W Type Part No.
1.0 Ω	HJ353100	HF853100	12KΩ	HJ357120	HF857120
1.8 〃	HJ353180	※	15 〃	HJ357150	HF857150
2.2 〃	HJ353220	HF853220	18 〃	HJ357180	HF857180
3.3 〃	HJ353330	HF853330	22 〃	HJ357220	HF857220
4.7 〃	HJ353470	HF853470	27 〃	HJ357270	HF857270
5.6 〃	HJ353560	HF853560	33 〃	HJ357330	HF857330
10 〃	HJ354100	HF854100	39 〃	HJ357390	HF857390
15 〃	HJ354150	HF854150	47 〃	HJ357470	HF857470
22 〃	HJ354220	HF854220	56 〃	HJ357560	HF857560
27 〃	HJ354270	HF854270	68 〃	HJ357680	HF857680
33 〃	HJ354330	HF854330	82 〃	HJ357820	HF857820
39 〃	HJ354390	HF854390	91 〃	HJ357910	HF857910
47 〃	HJ354470	HF854470	100 〃	HJ358100	HF858100
56 〃	HJ354560	HF854560	120 〃	HJ358120	HF858120
68 〃	HJ354680	HF854680	150 〃	HJ358150	HF858150
82 〃	HJ354820	HF854820	180 〃	HJ358180	HF858180
100 〃	HJ355100	HF855100	220 〃	HJ358220	HF858220
110 〃	HJ355110	HF855110	270 〃	HJ358270	HF858270
120 〃	HJ355120	HF855120	330 〃	HJ358330	HF858330
150 〃	HJ355150	HF855150	390 〃	HJ358390	HF858390
160 〃	HJ355160	※	470 〃	HJ358470	HF858470
180 〃	HJ355180	HF855180	560 〃	HJ358560	HF858560
220 〃	HJ355220	HF855220	680 〃	HJ358680	HF858680
270 〃	HJ355270	HF855270	820 〃	HJ358820	HF858820
330 〃	HJ355330	HF855330	1.0MΩ	HJ359100	HF859100
390 〃	HJ355390	HF855390	1.2 〃	HJ359120	※
470 〃	HJ355470	HF855470	1.5 〃	HJ359150	HF859150
510 〃	※	HF855510	1.8 〃	HJ359180	HF859180
560 〃	HJ355560	HF855560	2.2 〃	HJ359220	HF859220
680 〃	HJ355680	HF855680	3.3 〃	HJ359330	HF859330
820 〃	HJ355820	HF855820	3.9 〃	HJ359390	※
910 〃	HJ355910	HF855910	4.7 〃	HJ359470	HF859470
1.0KΩ	HJ356100	HF856100			
1.2 〃	HJ356120	HF856120			
1.5 〃	HJ356150	HF856150			
1.8 〃	HJ356180	HF856180			
2.0 〃	HJ356200	HF856200			
2.2 〃	HJ356220	HF856220			
2.4 〃	HJ356240	HF856240			
2.7 〃	HJ356270	HF856270			
3.0 〃	HJ356300	HF856300			
3.3 〃	HJ356330	HF856330			
3.6 〃	HJ356360	HF856360			
3.9 〃	HJ356390	HF856390			
4.7 〃	HJ356470	HF856470			
5.1 〃	HJ356510	HF856510			
5.6 〃	HJ356560	HF856560			
6.8 〃	HJ356680	HF856680			
8.2 〃	HJ356820	HF856820			
9.1 〃	HJ356910	HF856910			
10 〃	HJ357100	HF857100			

1/4W Type

HJ35○○○○

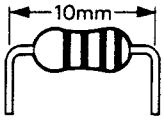

1/6W Type
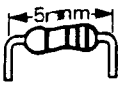
HF85○○○○