PIONEER

Service Manual

CIRCUIT & MECHANISM DESCRIPTIONS

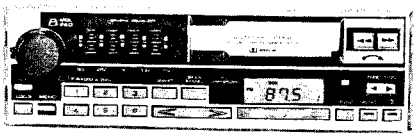

The photo shows the model KEH-9300 SDK/WG.

ORDER NO.
CRT-398-0

CASSETTE CAR STEREO WITH FM/MW/LW ELECTRIC TUNER

KEH-9300SDK WG

KEH-9300 EW

CASSETTE CAR STEREO WITH FM/AM ELECTRIC TUNER

KEH-9000 ES

- For the repair and adjustments, please refer to the service manual (CRT-387).
- 'Dolby' and the double-D symbol are trademarks of Dolby Laboratories Licensing Corporation.
- Noise Reduction System manufactured under license from Dolby Laboratories Licensing Corporation.

CONTENTS

PIONEER ELECTRONIC CORPORATION 4-1, Meguro 1-Chome, Meguro-ku, Tokyo 153, Japan
PIONEER ELECTRONICS (USA) INC. P.O. Box 1760, Long Beach, California 90801 U.S.A.
PIONEER ELECTRONIC (EUROPE) N.V. Keetberglaan 1, 2740 Beveren, Belgium
PIONEER ELECTRONICS AUSTRALIA PTY. LTD. 178-184 Boundary Road, Braeside, Victoria 3195, Australia

1. SPECIFICATIONS

General (KEH-9300SDK)

Power source ..... DC14.4V (10.8 ~ 15.6V allowable)
Grounding system ..... Negative type
Max. current consumption 5A
Dimensions (chassis) ..... 180(W)×50(H)×160(D) mm
(front face) ..... 184(W)×56(H)×16(D) mm
Weight ..... 2.1 kg

General (KEH-9300, 9000)

Power source ..... DC 14.4V (10.8 ~ 15.6V allowable)
Grounding system ..... Negative type
Max. current consumption 5A
Dimensions (chassis) ..... 180(W)×50(H)×150(D) mm
(front face) ..... 184(W)×56(H)×16(D) mm
Weight ..... 2 kg

Amplifier

Maximum power output
(2 speaker) ..... 20W + 20W
(4 speaker) ..... 6.5W + 6.5W
Continuous power output
(2 speaker) ..... 13W + 13W (1% dist. at 1 kHz)
(4 speaker) ..... 4.5W + 4.5W (1% dist. at 1 kHz)
Load impedance
(2 speaker) ..... 4Ω (4 ~ 8Ω allowable)
(4 speaker) ..... 4Ω (2 ~ 8Ω allowable)
Graphic equalizer
(60, 250, 1k, 3.5k, 10 kHz) ..... ±10 dB

Tape player

Tape ..... Compact cassette tape (C-30 ~ C-90)
Tape speed ..... 4.76 cm/sec.
(+0.14 cm/sec., −0.05 cm/sec.)
Fast forward/rewind time ..... Approx. 100 sec. for C-60
Wow & flutter ..... 0.13% (WRMS)
Frequency response ..... Metal: 50 ~ 16,000 Hz (±3 dB)
Normal: 50 ~ 12,000 Hz (±3 dB)
Stereo separation ..... 45 dB
Signal-to-noise ratio ... Dolby NR IN: 60 dB (IEC-A network)
Dolby NR OUT: 52 dB (IEC-A network)

FM tuner (KEH-9300SDK)

Frequency range ..... 87.5 ~ 108 MHz
Usable sensitivity ..... 13.2 dBf (1.8 μV/150Ω, mono)
50 dB quieting sensitivity ..... 18.2 dBf (3 μV/150Ω, mono)
Signal-to-noise ratio ..... 70 dB (IEC-A network)
Distortion ..... 0.3% (at 65 dBf, 1 kHz, stereo)
Frequency response ..... 50 ~ 12,000 Hz (±3 dB)
Stereo separation ..... 40 dB (at 65 dBf, 1 kHz)

FM tuner (KEH-9300, 9000)

Frequency range ..... 87.5 ~ 108 MHz
Usable sensitivity ..... 12 dBf (1.1 μV/75Ω, mono)
50 dB quieting sensitivity ..... 17 dBf (1.9 μV/75Ω, mono)
Signal-to-noise ratio ..... 70 dB (IEC-A network)
Distortion ..... 0.3% (at 65 dBf, 1 kHz, stereo)
Frequency response ..... 50 ~ 12,000 Hz (±3 dB)
Stereo separation ..... 40 dB (at 65 dBf, 1 kHz)

MW tuner (AM tuner)

Frequency range ..... 531 ~ 1,602 kHz
Usable sensitivity ..... 18 μV (25 dB) (S/N: 20 dB)
Selectivity ..... 30 dB (±9 kHz)

LW tuner (KEH-9300SDK, 9300)

Frequency range ..... 153 ~ 281 kHz
Usable sensitivity ..... 30 μV (30 dB) (S/N: 20 dB)
Selectivity ..... 30 dB (±9 kHz)

Note:
Specifications and the design are subject to possible modification without notice due to improvements.

2. OPERATION

• **KEH-9300SDK**

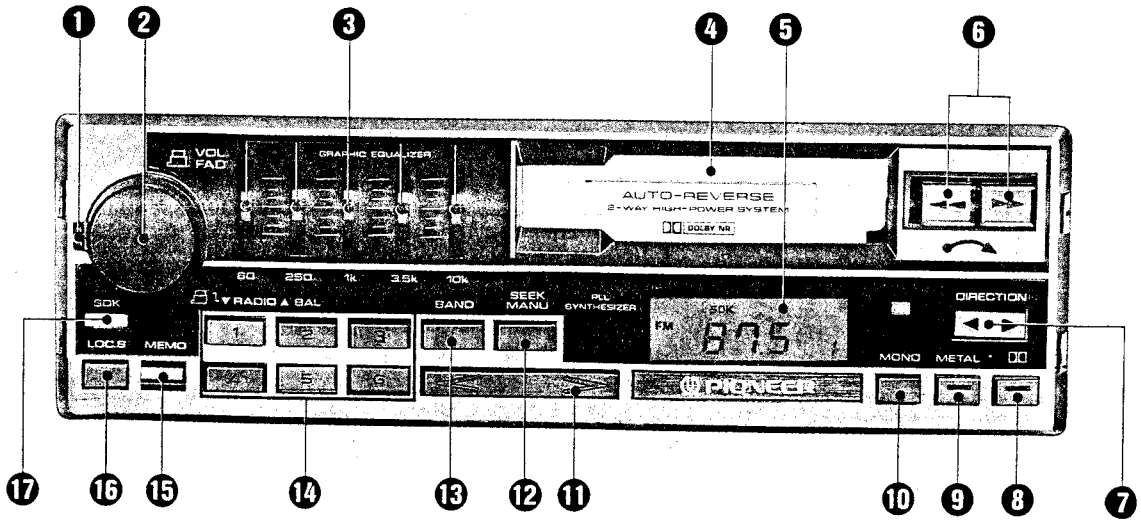

To Listen to a Tape

1. Insert the cassette tape into the Cassette Insertion Slot ❹ until it is locked in position with the exposed piece of tape on the right. (The unit will automatically switch to the tape mode when a cassette is inserted while the radio is on.) (Fig. 1)
2. Adjust Volume ❷, Balance ❷, and Fader ❶ Controls. Pull out the Balance Control Knob ❷ and rotate to adjust balance.
3. Depress the Direction Change Button ❼ to switch over from the side of the tape you are listening to now to the other side during play.
4. To fast forward the tape, depress the Fast Forward/Rewind Button ❻ pointing in the same direction as the Direction Indicator until it locks into position. To rewind the tape, depress the Fast Forward/Rewind Button pointing in the opposite direction to the Direction Indicator until it locks into position. To release the fast forward or rewind mode, simply depress the other button lightly. (Fig. 2)
   To change from fast forward to rewind or vice versa, depress the other button directly until it locks and this will change the traveling direction of the tape. When the tape has been fully wound up in the fast forward mode, the fast forward mode is released and play begins automatically from the first program on the other side of the tape. When the tape has been fully wound up in the rewind mode, the rewind mode is released and play begins automatically from the first program on the side you have been listening to.
5. To stop tape play or replace the cassette, fully depress both Fast Forward/Rewind Buttons ❻ at the same time. (Fig. 3)

Note:
Do not try to eject the cassette immediately after insertion, as it will cause malfunction. Wait a few seconds.

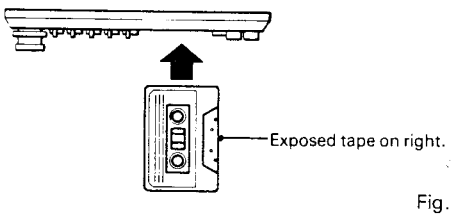

Fig. 1

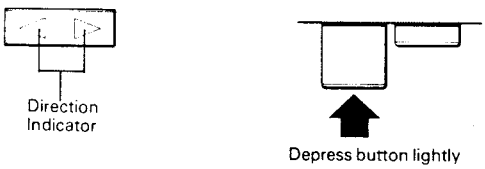

Fig. 2

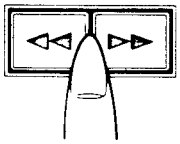

Fig. 3

Fader Control ❶
Adjusts front-to-rear balance of four speaker system. (Fig. 4)

Equalizer Control Levers ❸
By sliding these levers up and down, the desired sound can be created to match the music. (Fig. 5)
Musical instruments and vocals each possess their respective individual frequency ranges. The graphic equalizer divides these music sources into several frequency bands and since the level of each of these frequency bands can be increased or decreased, fine adjustments can be made which cannot be performed using ordinary tone controls. (Fig. 6)

Dolby NR Switch ❽
When listening to a tape recorded with Dolby NR, press this switch. The Dolby NR Indicator will light. (Fig. 7)

Tape Select Button ❾
Set this button to the position that corresponds to the type of tape you are using. If the button is pressed, the Metal Indicator will illuminate. (Fig. 8)

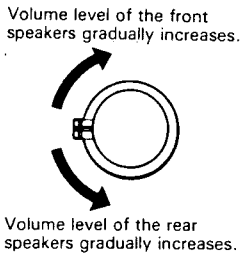

Fig. 4

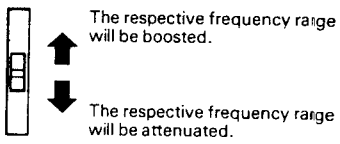

Fig. 5

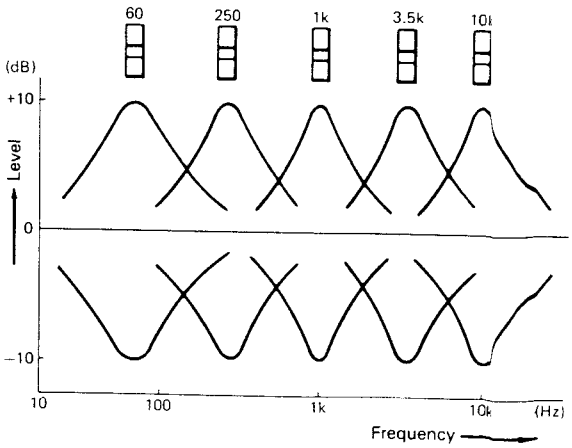

Fig. 6

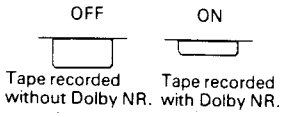

Fig. 7

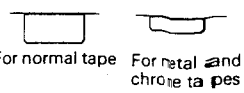

Fig. 8

• KEH-9300

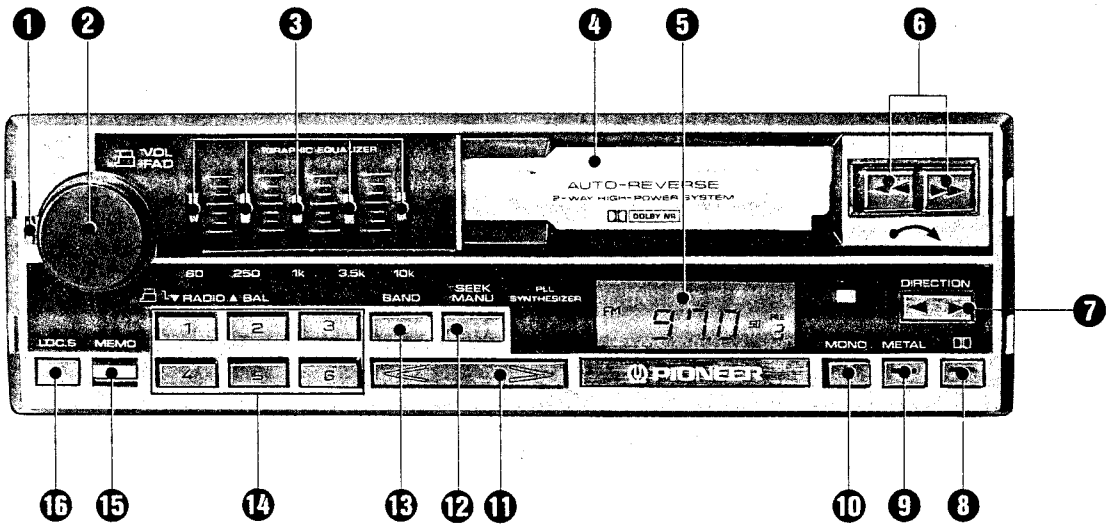

• KEH-9000

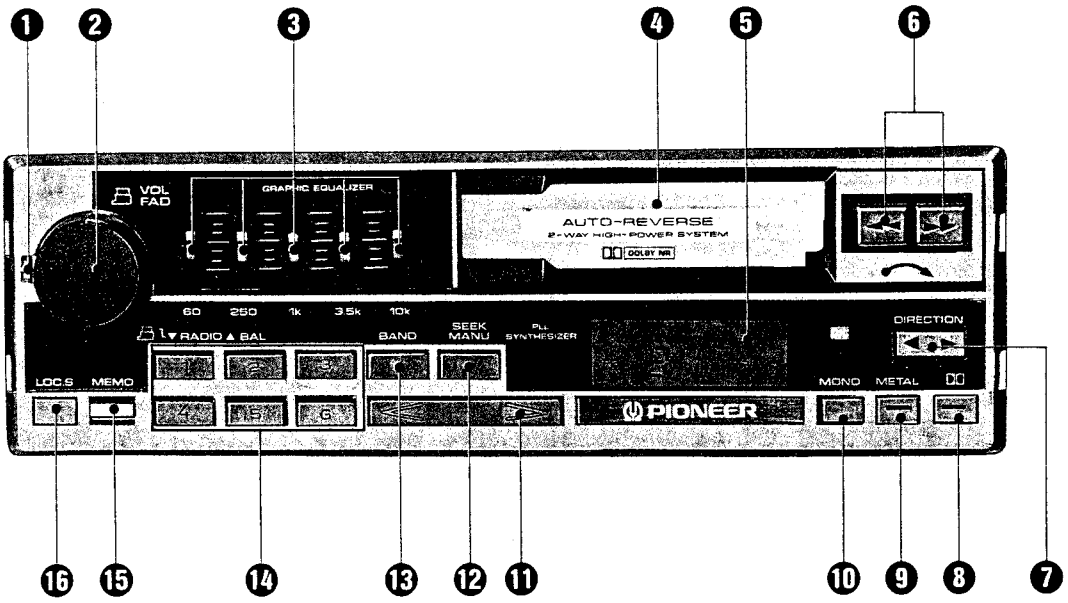

To Listen to the Radio (KEH-9300SDK, 9300)

1. When the Radio Power Switch ❷ is pushed on, the radio frequency will appear on the Digital Display ❺. (Fig. 9)
2. Press Band Select Button ⓭ to select the desired band and Digital Display ❺ will illuminate to indicate the band.
3. Tune in desired station.
   There are several methods of finding the radio station you wish to listen to.

Manual Tuning

Press Manual/Seek Select Button ⓬ to select Manual Tuning. (Digital Display ❺ indicates nothing during Manual Tuning but SEEK illuminates during Seek Tuning.) Press the right or left side of Tuning Button ⓫ to set the desired station. (Fig. 10)

FM Band

Each time the > Tuning Button ⓫ is pressed, the frequency increases 25kHz. If you continue to press the button without releasing it, the frequency will continuously increase in 25kHz increments. (Fig. 11)

Each time the < Tuning Button ⓫ is pressed, the frequency decreases 25kHz. If you continue to press the button without releasing it, the frequency will continuously decrease in 25kHz increments. (Fig. 12)

When a strong FM Stereo station is received, the FM Stereo Indicator will illuminate.

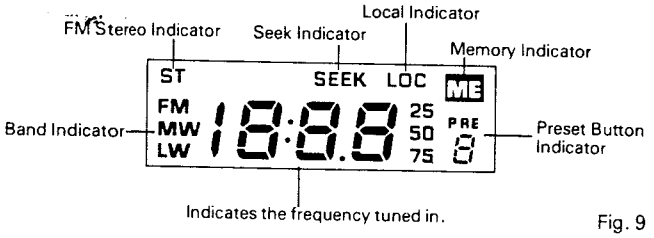

Fig. 9

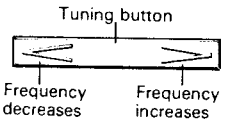

Fig. 10

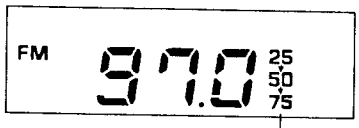

Fig. 11

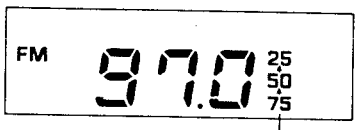

Fig. 12

MW Band

Each time the > Tuning Button ⓫ is pressed, the frequency increases 9kHz. If you continue to press the button without releasing it, the frequency will continuously increase in 9kHz increments.
Each time the < Tuning Button ⓫ is pressed, the frequency decreases 9kHz. If you continue to press the button without releasing it, the frequency will continuously decrease in 9kHz increments.

LW Band

Each time the > Tuning Button ⓫ is pressed, the frequency increases 1kHz. If you continue to press the button without releasing it, the frequency will continuously increase in 1kHz increments.
Each time the < Tuning Button ⓫ is pressed, the frequency decreases 1kHz. If you continue to press the button without releasing it, the frequency will continuously decrease in 1kHz increments.

Seek Tuning

Press Manual/Seek Button ⓬ to select Seek Tuning. (At this time, SEEK in the Digital Display ❺ illuminates).
If the > Tuning Button ⓫ is pressed, the next higher, clearly receivable station will be tuned automatically.
If the < Tuning Button ⓫ is pressed, the next lower, clearly receivable station will be tuned automatically.

Remote Control Seek Switch:

Remote control seek tuning is possible by connecting the accessory Remote Control Seek Switch.
Press the UP side of this switch and the next higher clearly receivable station will be tuned automatically. Press the DOWN side and the next lower, clearly receivable station will be tuned automatically.
Press the Manual/Seek Select Button ⓬ and Manual Tuning is possible at the same time.

FM Band

Each time a Tuning Button ⓫ is pressed, the frequency increases or decreases to the next clearly receivable station in 50kHz increments.
For fine frequency adjustments, return the Manual/Seek Select Button to the Manual position and adjust the frequency using the Tuning Button.

MW Band

Each time a Tuning Button ⓫ is pressed, the frequency increases or decreases to the next clearly receivable station in 9kHz increments.

LW Band

Each time a Tuning Button ⓫ is pressed, the frequency increases or decreases to the next clearly receivable station in 9kHz increments. Since the LW Band frequency range of this unit is 153kHz to 281kHz, stations selectable using Seek Tuning are 155kHz, 164kHz, 173kHz, 182kHz... 272kHz and 281kHz. (During manual tuning, the frequency is changed in increments of 9kHz. When the upper end of the frequency band, 281kHz, is reached during manual tuning, the tuning automatically starts from the lower end, 155kHz, again.)
To tune a station on another frequency, return the Manual/Seek Select Button ⓬ to the Manual position and tune the station in 1kHz increments using the Tuning Button.

To Listen to the Radio (KEH-9000)

1. When the Radio Power Switch ❷ is pushed on, the radio frequency will appear on the Digital Display ❺. (Fig. 9)
2. Press Band Select Button ⓭ to select the desired band and Digital Display ❺ will illuminate to indicate the band.
3. Tune in desired station.
   There are several methods of finding the radio station you wish to listen to.

Manual Tuning

Press Manual/Seek Select Button ⓬ to select Manual Tuning. (Digital Display ❺ indicates nothing during Manual Tuning but SEEK illuminates during Seek Tuning.) Press the right or left side of Tuning Button ⓫ to set the desired station. (Fig. 10)

FM Band

Each time the > Tuning Button ⓫ is pressed, the frequency increases 25kHz. If you continue to press the button without releasing it, the frequency will continuously increase in 25kHz increments. (Fig. 11)

Each time the < Tuning Button ⓫ is pressed, the frequency decreases 25kHz. If you continue to press the button without releasing it, the frequency will continuously decrease in 25kHz increments. (Fig. 12)

When a strong FM Stereo station is received, the FM Stereo Indicator will illuminate.

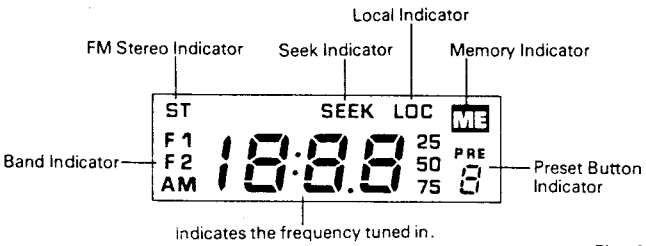

Fig. 9

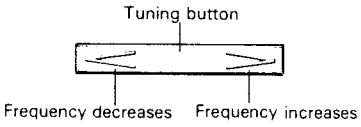

Fig. 10

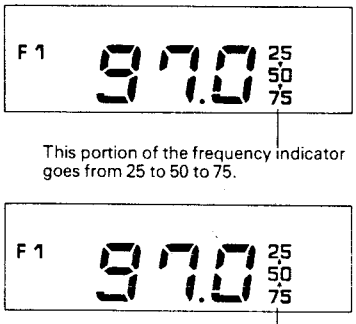

Fig. 11

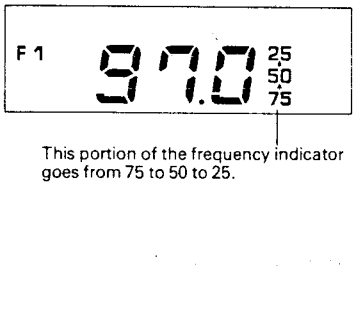

Fig. 12

AM Band

Each time the > Tuning Button ⓫ is pressed, the frequency increases 9kHz. If you continue to press the button without releasing it, the frequency will continuously increase in 9kHz increments.

Each time the < Tuning Button ⓫ is pressed, the frequency decreases 9kHz. If you continue to press the button without releasing it, the frequency will continuously decrease in 9kHz increments.

Seek Tuning

Press Manual/Seek Button ⓬ to select Seek Tuning. (At this time, SEEK in the Digital Display ❺ illuminates).

If the > Tuning Button ⓫ is pressed, the next higher, clearly receivable station will be tuned automatically.

If the < Tuning Button ⓫ is pressed, the next lower, clearly receivable station will be tuned automatically.

Remote Control Seek Switch:

Remote control seek tuning is possible by connecting the accessory Remote Control Seek Switch.

Press the UP side of this switch and the next higher clearly receivable station will be tuned automatically. Press the DOWN side and the next lower, clearly receivable station will be tuned automatically.

Press the Manual/Seek Select Button ⓬ and Manual Tuning is possible at the same time.

FM Band

Each time a Tuning Button ⓫ is pressed, the frequency increases or decreases to the next clearly receivable station in 50kHz increments.

For fine frequency adjustments, return the Manual/Seek Select Button to the Manual position and adjust the frequency using the Tuning Button.

AM Band

Each time a Tuning Button ⓫ is pressed, the frequency increases or decreases to the next clearly receivable station in 9kHz increments.

Programming Stations (KEH-9300SDK, 9300)

You can preset a total of 18 stations (six FM, six MW and six LW) using the six feather-touch Preset Buttons. One button can store one station each for FM, MW and LW.

1. Press Band Select Button ⓭ and Digital Display ❺ will display FM.
2. Tune to the desired station using Manual Tuning or Seek Tuning.
3. Press the Memory Button ⓯ and the Memory Indicator (ME) will illuminate on the Digital Display ❺. Press one of the Preset Buttons ⓮ during the 5-second period that the Memory Indicator is illuminated. At this time the number of the preset button will illuminate. (Fig. 13)
4. One station has now been memorized for one of the Preset Buttons. Repeat steps (2) and (3) for each of the remaining five Preset Buttons.
5. Switch Band Select Button ⓭ to MW and then LW, and repeat steps (2), (3) and (4).

- Preset Button Indicator PRE is not illuminated for Manual Tuning or Seek Tuning. (Number display is unchanged.)

Local Station Seek Switch ⓰

At night when FM/MW/LW station broadcast signals are too strong, press this switch when unwanted stations often come in when using Seek Tuning. (At this time, LOC in the Digital Display ❺ illuminates). Tuner sensitivity is not affected after a station is locked on.
Press the switch again and LOC display goes out.

FM Auto/Mono Select Button ⓪

This button will only function with an FM broadcast. (Fig. 14)

FM Auto: In most cases, this button should be left in this position. The following functions are automatically activated according to the strength of the incoming FM signal:
- Hi-Fi stereo quality is reproduced with a strong FM stereo signal.
- Reception is automatically controlled (stereo separation is gradually narrowed and high frequency is slightly attenuated) to reduce background noise as the incoming signal weakens. Eventually, reception is switched to monaural.

FM Mono: For monaural reception, regardless of the strength of the incoming FM signal or whether it is stereo or monaural.

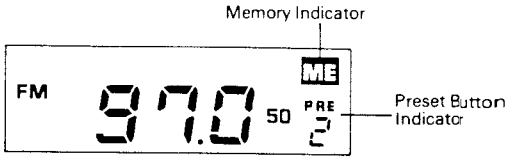

Fig. 13

Fig. 14

Programming Stations (KEH-9000)

You can preset a total of 18 stations (six FM1, six FM2 and six AM) using the six feather-touch Press Buttons. One button can store one station each for FM1, FM2 and AM. To listen to an FM broadcast, set to either FM1 or FM2. Both FM1 and FM2 are in a frequency band between 87.5 and 108MHz.

1. Press Band Select Button ⓭ and Digital Display ❺ will display FM1.
2. Tune to the desired station using Manual Tuning or Seek Tuning.
3. Press the Memory Button ⓯ and the Memory Indicator (ME) will illuminate on the Digital Display ❺. Press one of the Preset Buttons ⓮ during the 5-second period that the Memory Indicator is illuminated. At this time the number of the Preset Button will illuminate. (Fig. 13)
4. One station has now been memorized for one of the Preset Buttons. Repeat steps (2) and (3) for each of the remaining five Preset Buttons.
5. Switch Band Select Button ⓭ to FM2 and then AM, and repeat steps(2), (3) and (4).

- Preset Button Indicator PRE is not illuminated for Manual Tuning or Seek Tuning. (Number display is unchanged.)

Local Station Seek Switch ⓰

At night when FM/AM station broadcast signals are too strong, press this switch when unwanted stations often come in when using Seek Tuning. (At this time, LOC in the Digital Display ❺ illuminates). Tuner sensitivity is not affected after a station is locked on.
Press the switch again and LOC display goes out.

FM Auto/Mono Select Button ⓪

This button will only function with an FM broadcast. (Fig. 14)

FM Auto: In most cases, this button should be left in this position. The following functions are automatically activated according to the strength of the incoming FM signal:
- Hi-Fi stereo quality is reproduced with a strong FM stereo signal.
- Reception is automatically controlled (stereo separation is gradually narrowed and high frequency is slightly attenuated) to reduce background noise as the incoming signal weakens. Eventually, reception is switched to monaural.

FM Mono: For monaural reception, regardless of the strength of the incoming FM signal or whether it is stereo or monaural.

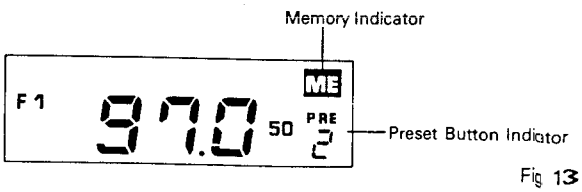

Fig. 13

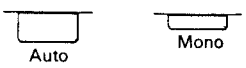

Fig. 14

To Listen to Traffic Information (KEH-9300SDK)

1. Push Radio Power Switch ❷. Press Band Select Button ⓭ and Digital Display ❺ will illuminate to indicate FM. (Fig. 15)
2. Press SDK Switch ⓱ and Digital Display will illuminate. Press Tuning Button ⓫ to receive traffic information broadcasts for the area through which you are driving. The SK indicator will illuminate when a signal is received.
3. The volume will become louder when a traffic information announcement is received during a broadcast. Volume cannot be lowered by turning the Volume Control ❷ to the left.
4. As the traffic information broadcast signal weakens, and you reach an area where the signal cannot be picked up at all, the SK Indicator will go out, indicating that traffic information can no longer be monitored. If this situation persists for more than 30 seconds, an alarm will beep to alert the driver. In such a case, either receive another traffic information broadcast station, turn the SDK Switch ⓱ off, or switch to the MW or LW band by pushing the Band Select Button ⓭.

Note:
Keep the SDK Switch off to listen to FM broadcast that is not a traffic information broadcast.

- Traffic information can be monitored in tape playback, fast forward and rewind modes.
- To listen to tape only, turn SDK Switch or Radio Power Switch off. Press Band Select Button to select an MW or LW station.

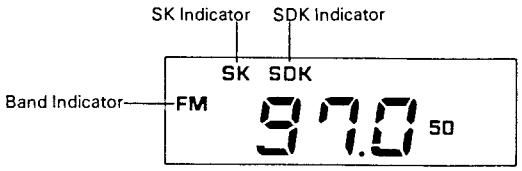

Fig. 15

3. CONNECTION

3.1 KEH-9300SDK, 9000

• Four-speaker System

This unit can be operated with either a four-speaker system or a two speaker high-power system. Refer to connection diagram to find out how to connect the speakers.
- Set the speaker mode selector switch to 4SP when using the 4-speaker system.
- Whenever replacing a fuse be sure to replace with one of the same capacity.

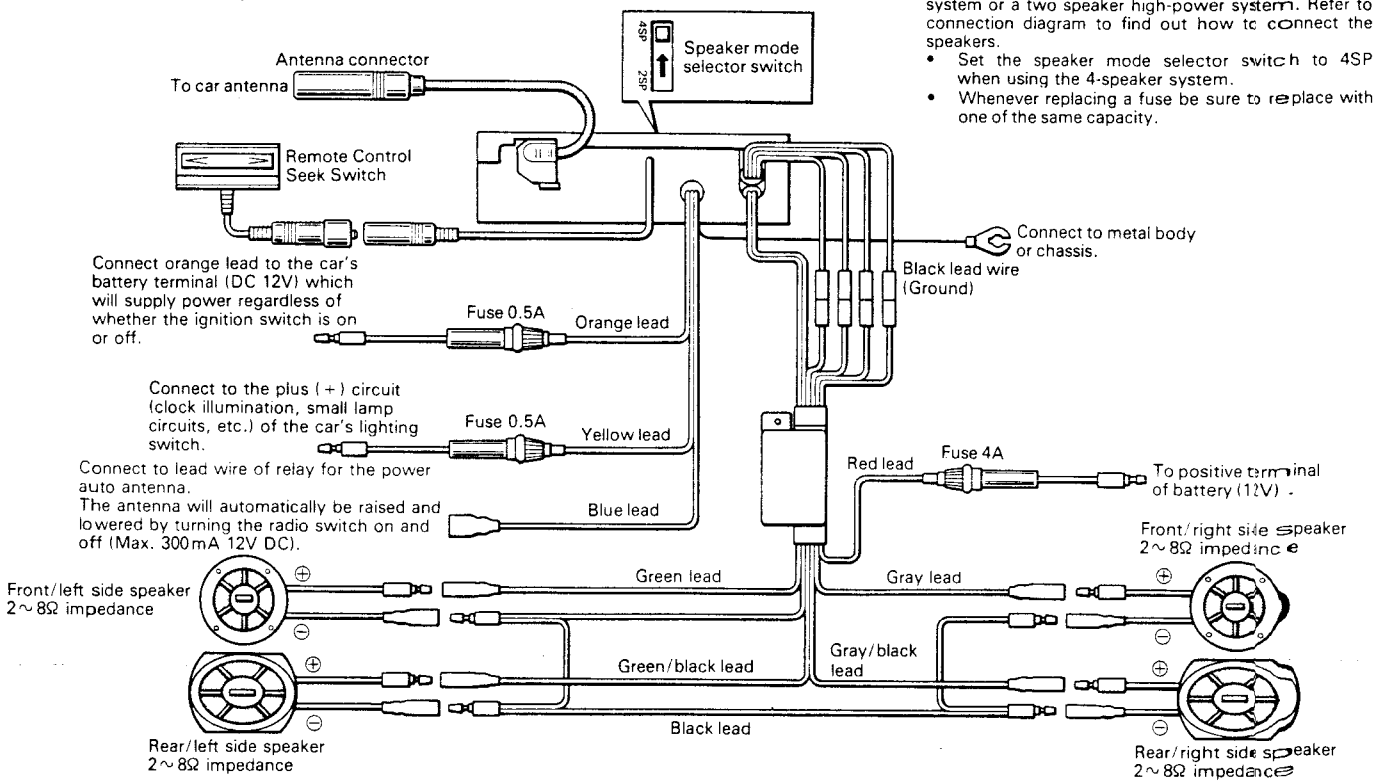

• Two-speaker High-power System

- Set the speaker mode selector switch to 2SP when using the 2-speaker high-power system.
- Speakers for the 2-speaker high power system have maximum power output of over 20W, so be sure the impedance is 4 to 8Ω. Be aware of the fact that using a speaker other than the one specified can cause the speaker to be damaged.
- A special BPTL circuit is used so be sure that you do not connect the speaker directly to ground nor join the left and right speaker (−) leads.

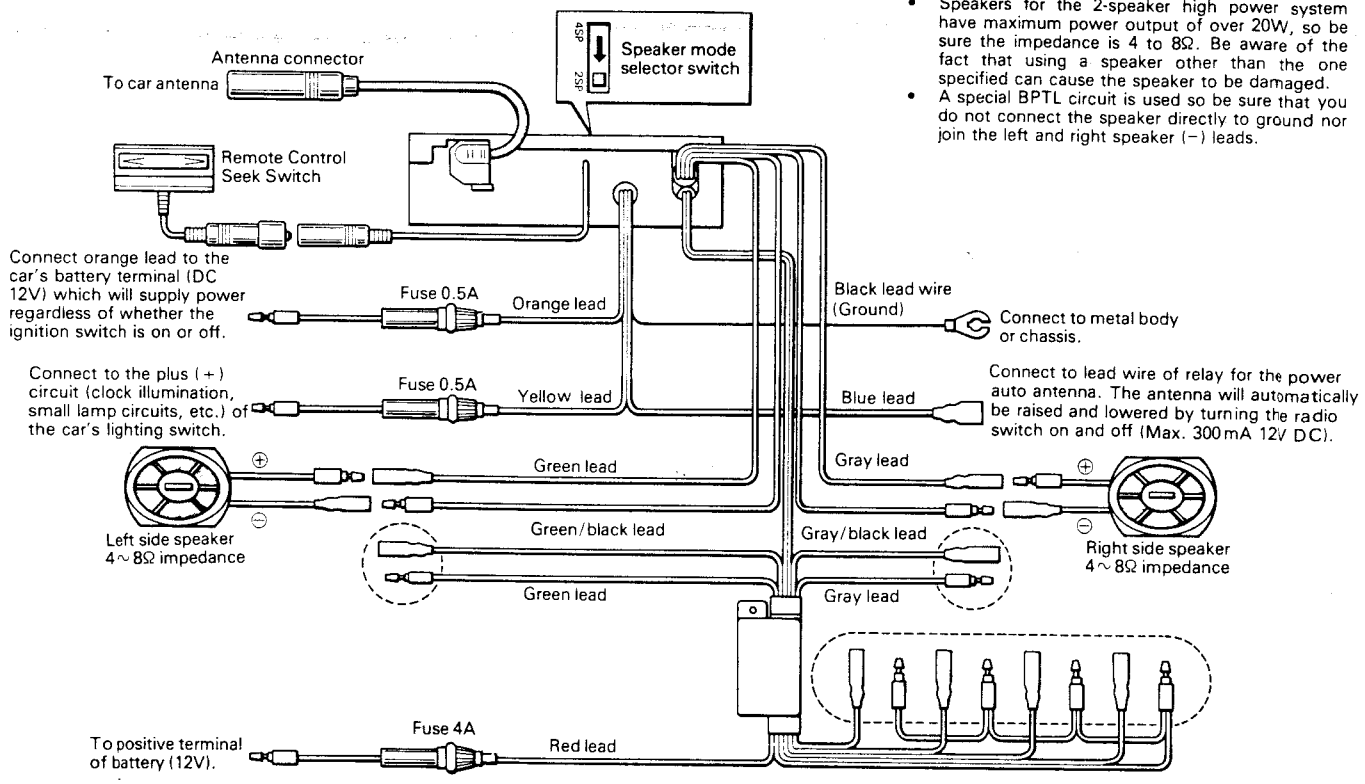

3.2 KEH-9300

• Four-speaker System

This unit can be operated with either a four-speaker system or a two speaker high-power system. Refer to connection diagram to find out how to connect the speakers.

- Set the speaker mode selector switch to 4SP when using the 4-speaker system.
- Whenever replacing a fuse be sure to replace with one of the same capacity.

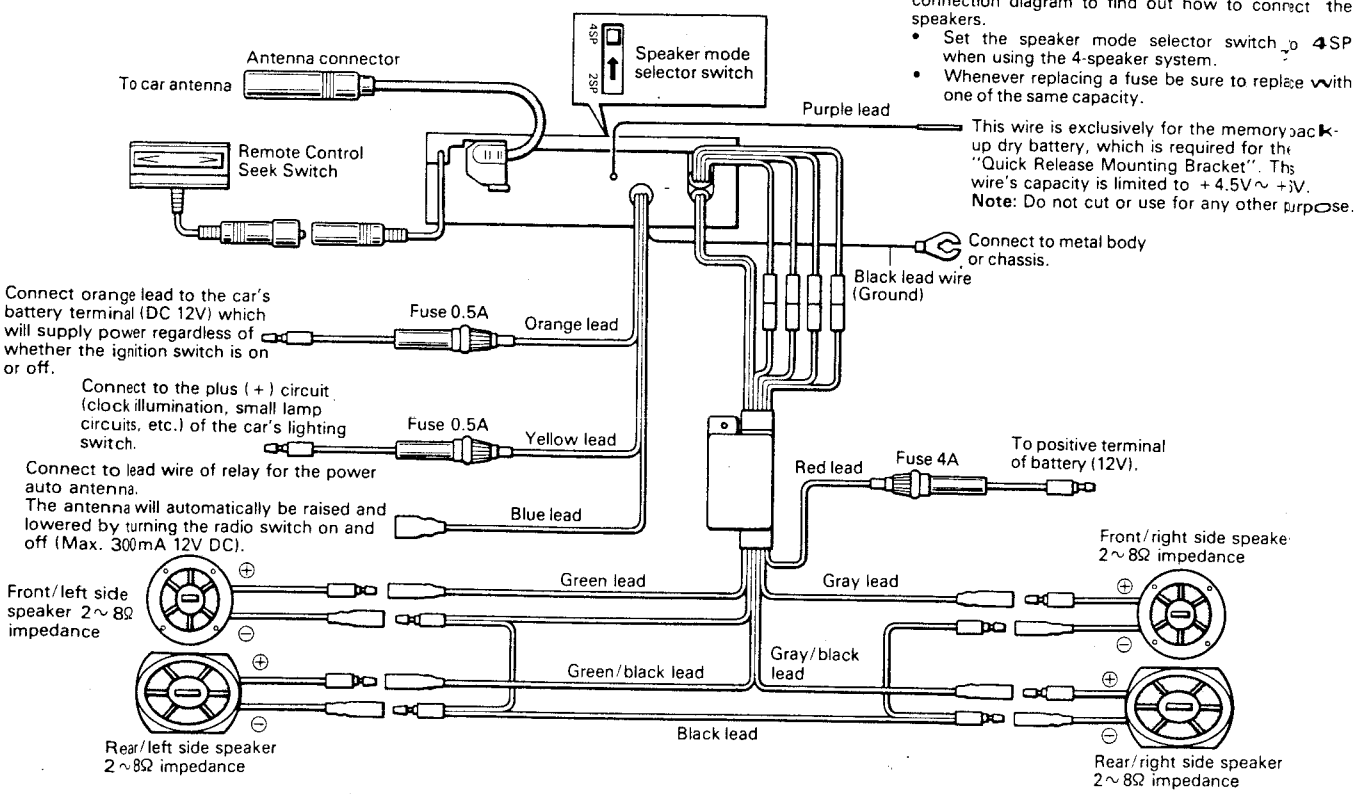

• Two-speaker High-power System

- Set the speaker mode selector switch to 2SP when using the 2-speaker high-power system.
- Speakers for the 2-speaker high power system have maximum power output of over 20W, so be sure the impedance is 4 to 8Ω. Be aware of the fact that using a speaker other than the one specified can cause the speaker to be damaged.
- A special BPTL circuit is used so be sure that you do not connect the speaker directly to ground nor join the left and right speaker (−) leads.

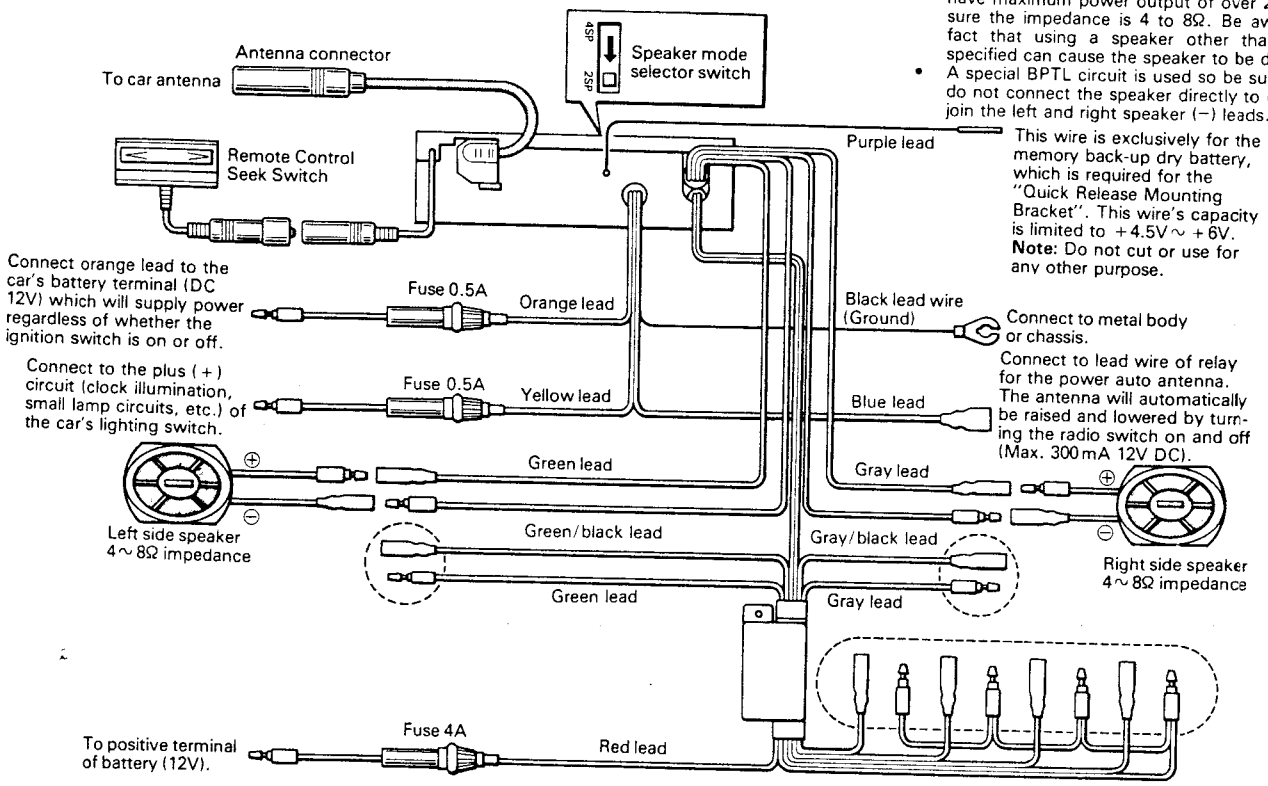

4. CIRCUIT DESCRIPTION

• Level Diagram

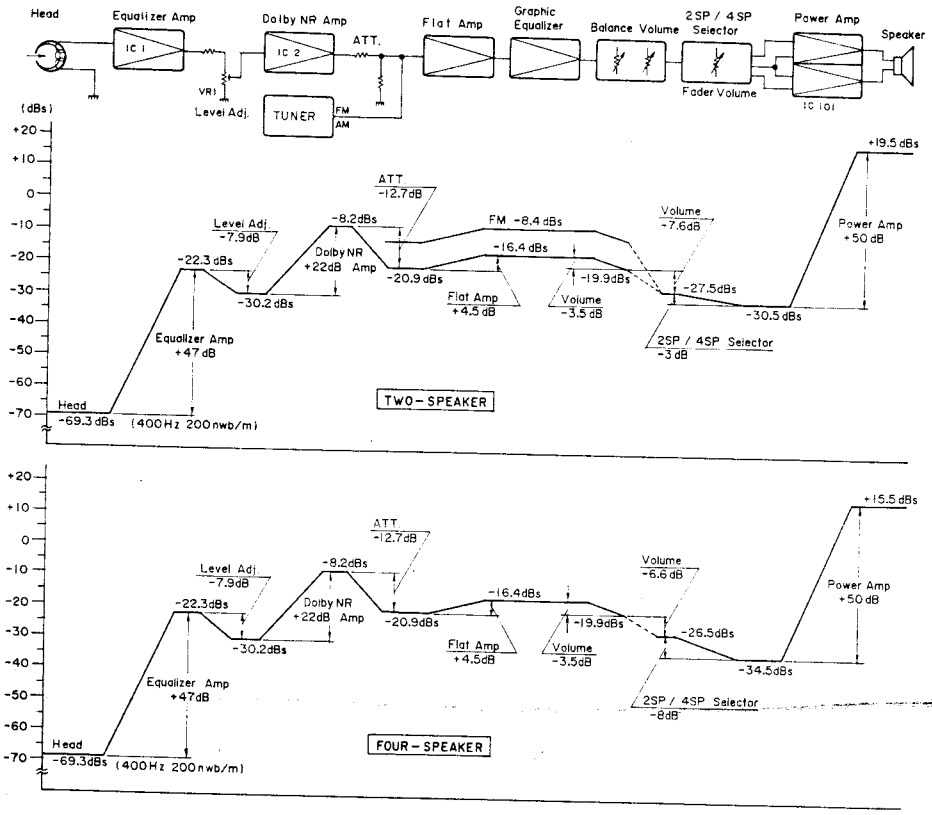

Fig. 1

• **Block Diagram (KEH-9300SDK)**

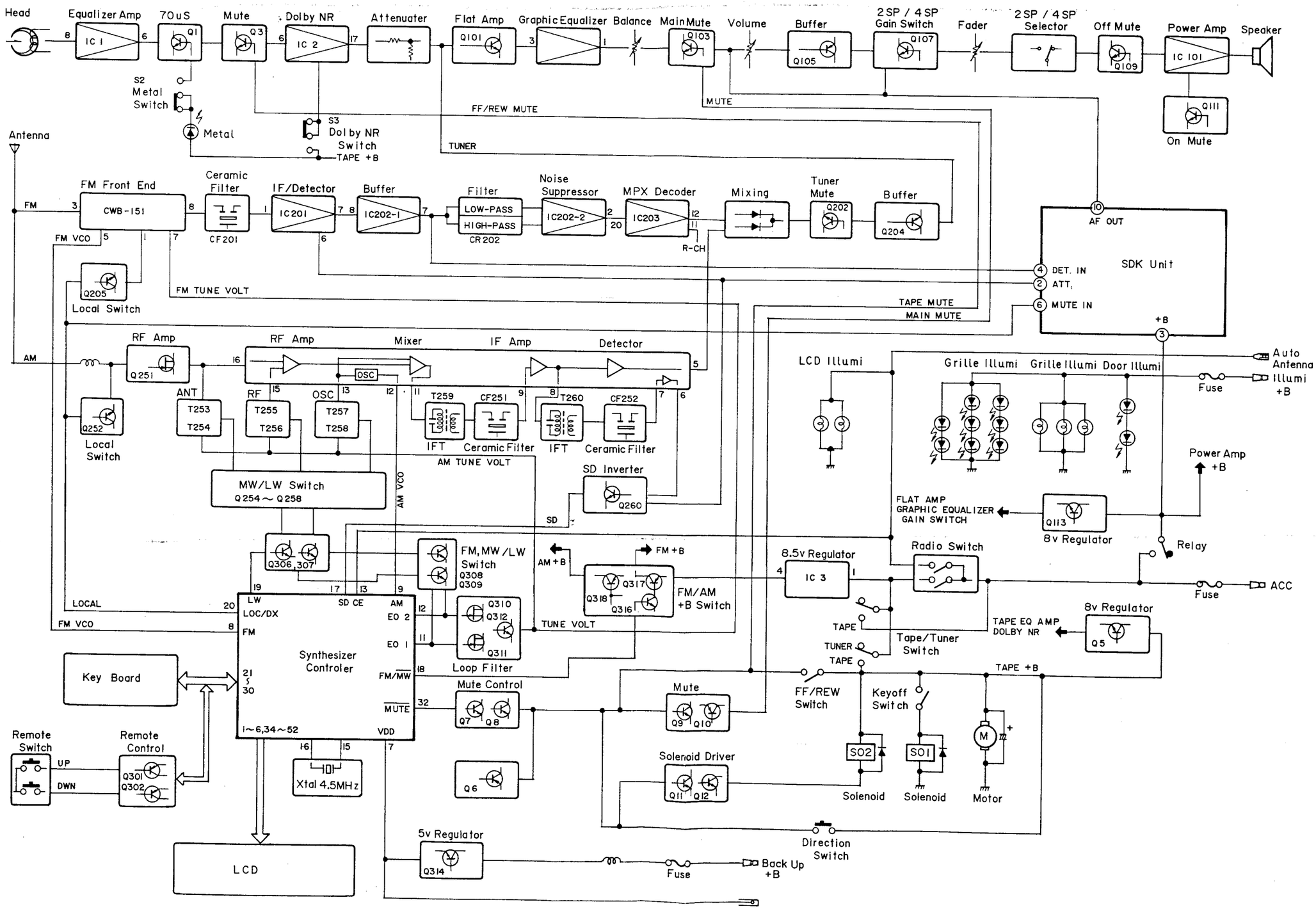

Fig. 2

• **Block Diagram (KEH-9300)**

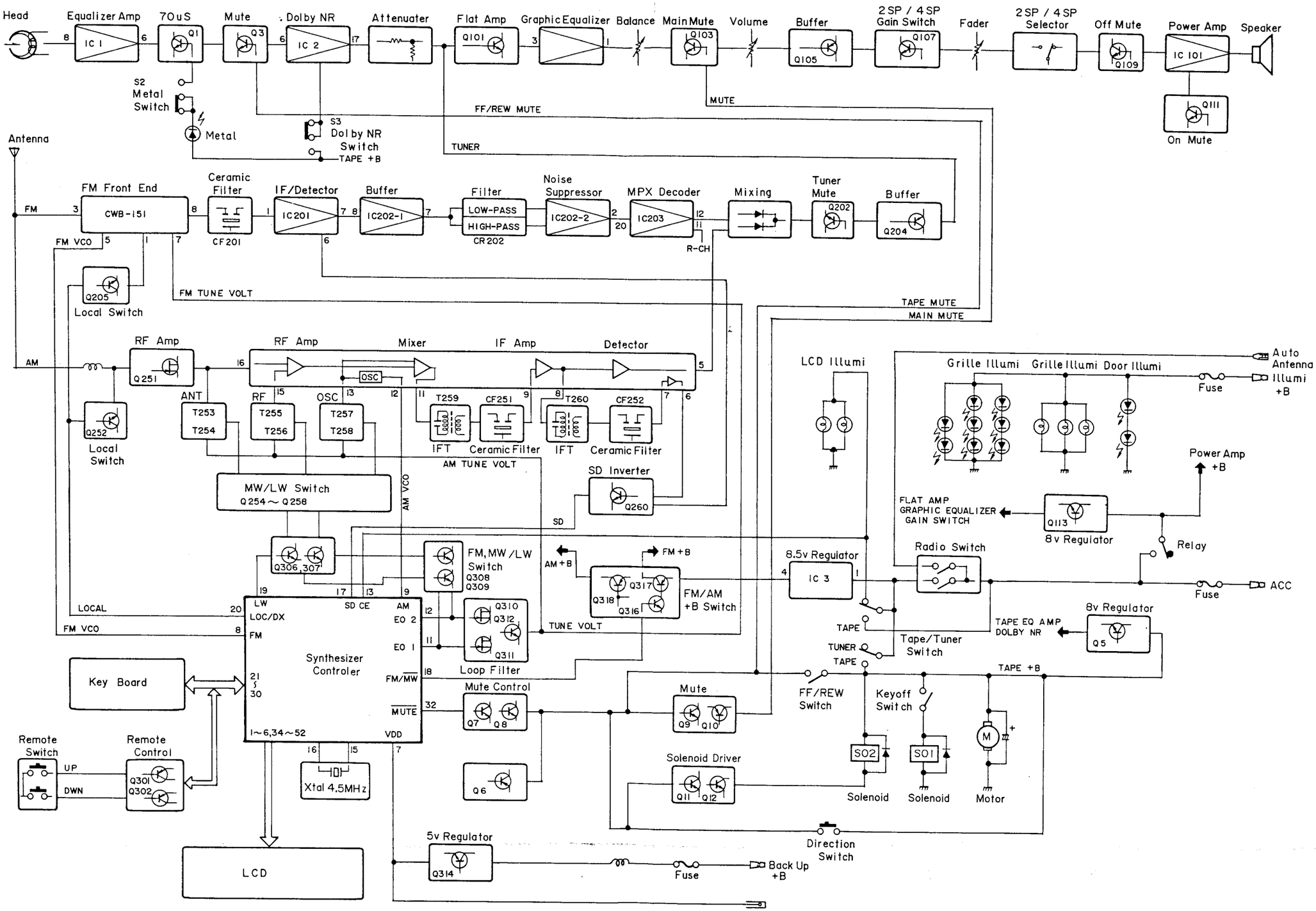

Fg - 3

• **Block Diagram (KEH-9000)**

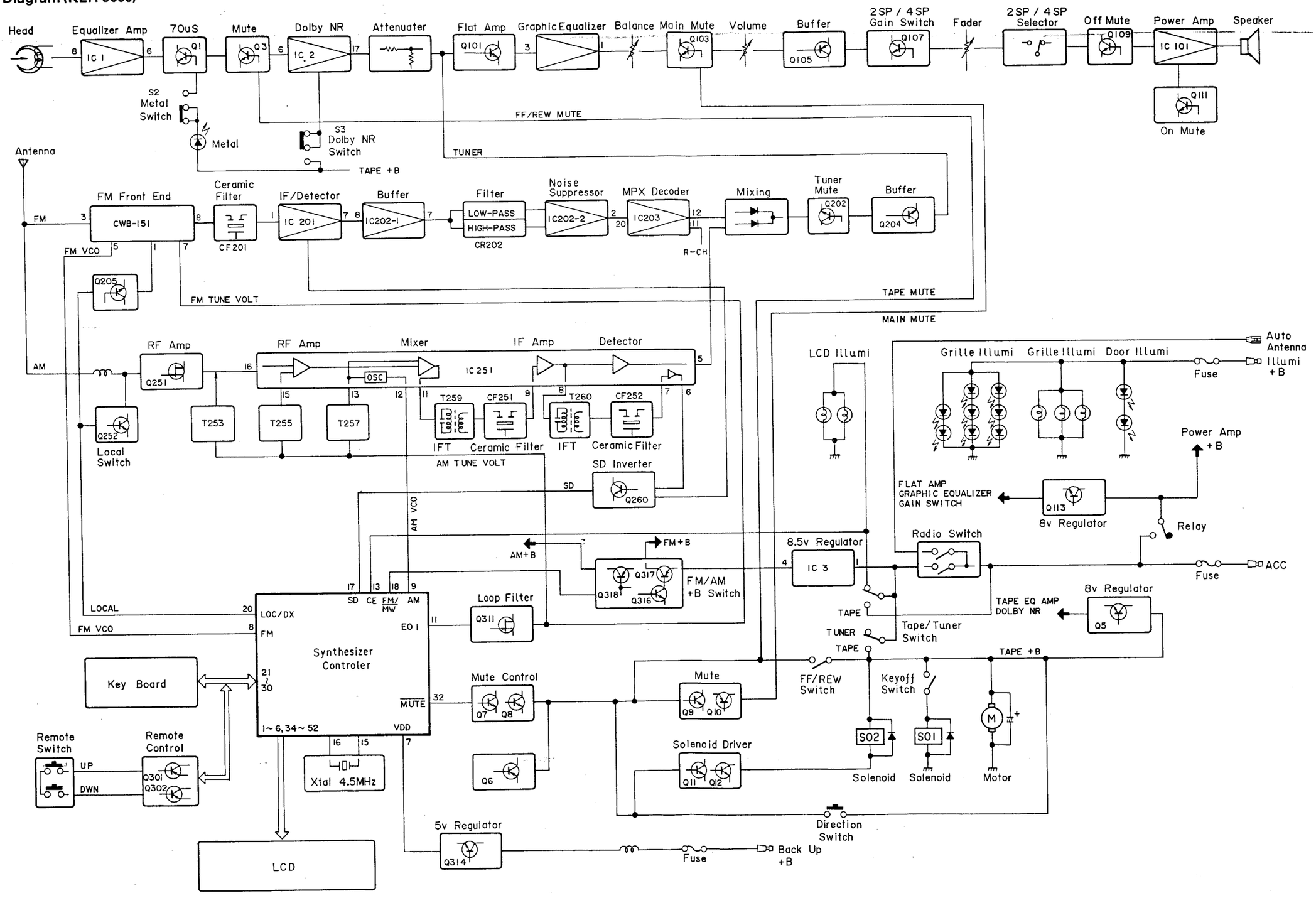

Fig. 4

• Operation of FM Section

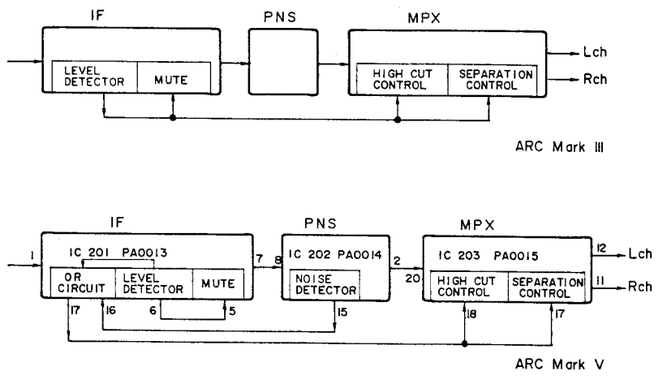

Fig. 5

ARC Mark V

The high-cut and separation, which were controlled by the input signal strength level in the ARC Mark III, can also be controlled by the noise level in the ARC Mark V. Therefore noise in strong signal areas, impossible to suppress before, can now be suppressed adequately.

Noise Detector Circuit

Co-using the PNS HIGH PASS FILTER, this operates by detecting the components above 100 kHz in the wave detector output. The HPF output is amplified to a sufficient level, rectified, phase reversed and then DC converted.

Input Level 35 dBμV Switch

The noise level ceases to control the high-cut and separation when the input level drops below 35 dBμV, and control of these is carried out entirely by the input signal strength level. This is the same as in the Mark III. This function operates in this manner because the noise level control will always output a signal when the signal strength is below 35 dBμV, and signal strength control is sufficient for medium-weak input signal areas.

1. Front end section

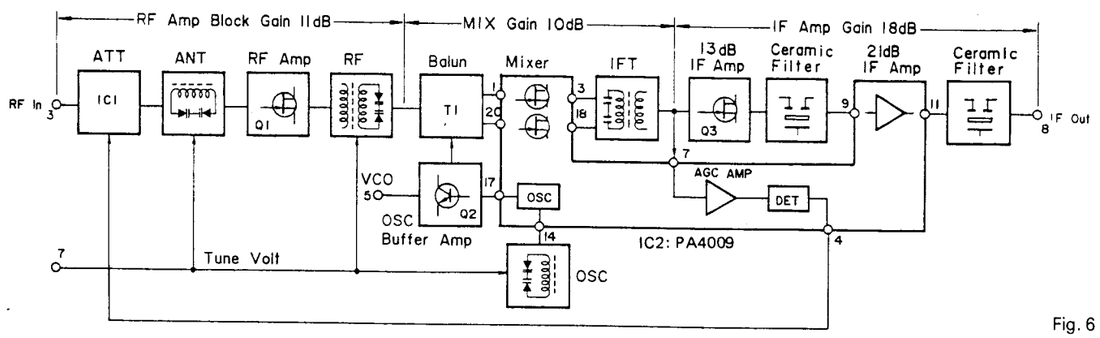

Fig. 6

The RF signal from the antenna passes through an attenuator constructed as a band-pass filter and is sent to the pi-shaped matching circuit, where high-end spurious response is improved. The signal then goes to the next stage, the RF amp. The RF amp employs a MOS FET capable of handling a wide dynamic range. The output from the RF amp passes through a parallel resonance circuit, is converted to a balanced signal from an unbalanced by a balun circuit and then goes to the mixer stage. This is a J-FET single balance type mixer which can accommodate a wide dynamic range. One of the IF signals from the mixer passes through the IF amp and ceramic filters. Another IF signal goes to the AGC amp. This AGC amp can operate even in the presence of interference signals. The AGC amp output is fed back to the RF attenuator circuit, forming a wide loop AGC. The AGC circuit operates at antenna input levels above 65 ± 5 dB.

2. IF detector section

A single-tuning quadrature detection is performed by IC PA0013 using IF amp and T201 to obtain an audio frequency output.

3. PNS section

This is a pulse noise canceller using IC PA0014 and CR composite part CR201 which comprises filters.

4. Multiplexer section

Stereo multiplexing is performed by IC PA0015. This IC does not operate the stereo circuit in the absence of current flowing through the stereo indicator terminal (pin 3).

5. Muting of weak incoming signals

IC PA0013 develops a DC voltage at pin 6 when the input is weak or detuned. When this voltage is applied to pin 5 through the filter consisting of capacitors and resistors, the attenuator goes into operation. The on/off (AUTO /MONO) of this weak input signal muting is controlled.
The stop signal for the seek operation uses a voltage developed at pin 6. (During broadcast reception, the voltage is at 0V).

6. Local station seeking

While seeking strong signal stations, the gain of the front end is decreased by making the voltage at AGC terminal in the front end 4.5V by Q205.

7. Separation control, high frequency control.

Pin 17 of IC203 (PA0015) functions as the separation control (SNC) pin, and pins 18 and 19 function as the high-cut control (HCC) pins. SNC and HCC are controlled by the control voltage from pin 17 of IC201 (PA0013). The control voltage can be varied by adjusting semi-fixed volume VR201, connected to pin 20 of IC201. SNC and HCC are controlled by the input signal strength level. However, these are also controlled by the noise detector level from IC202 (PA0014, PNS), unless the input signal strength is below 35 dBμV. The noise detector output from pin 7 of CR201 is input to pin 16 of IC201. The noise detector control of the high-cut and separation will switch on above 35 dBμV.

8. Mono/stereo

When the Mono switch is turned on, pin 6 of IC203 (PA0015) will be grounded, the stereo indicator will go out, and the output will switch to monaural. Pin 5 (MUTE DRIVE PIN) of IC201 (PA0013) will also be grounded, disengaging the level mute. Only for model KEH-9300SDK, pin 5 of IC201 will be grounded through Q315, disengaging the level mute. Q315 will go off when the SDK switch is turned on. Thus the level mute will not be disengaged.

• Operation of AM Section

IC HA12434 used in this unit is designed for electronic tuning and provided with the output circuit of the stop signals for seeking and VCO buffer. Its feature includes a wide-band AGC.

1. RF amplifier section

This section performs a single-tuning 2-stage RF amplification. The first stage is a narrow-band amplifier section consisting of Q251 and its load, i.e., resonance circuit (inductance of T253, and capacitance of varicap diode D255-1, C291). The second stage is a section consisting of RF amplifier 1 inside the IC and its load, or resonance circuit (inductance of T255, and capacitance of D255-2, C292). Pin 15 is not only a terminal lead to which the load of RF amp 1 is connected, but also an input terminal pin of the mixer input.

2. VCO section

The VCO (voltage-controlled oscillator) oscillates at its resonant frequency by the feedback circuit from pin 12 to pin 13 and the resonant circuit connected to pin 13. The resonant frequency is determined by the inductance of T257 and the composite capacitance of C_A, C_B, and D255-2.
C_A is a padding capacitor connected in series with capacitance-varying varicap diode D255-3, and C_B is a capacitor connected in parallel with varicap diode depending on its grade. All this contributes to better tracking with the RF stage.

3. Mixer section

The VCO output frequency from the VCO section and the input signal from RF amp 1 are mixed together at the mixer section to produce the IF component (450 kHz).

4. IF section

The intermediate frequency section consists of the IF filter (450 kHz) by T259 and CF251, the IF amp 1 and the IF filter by T260. Pin 8 is not only a load connecting terminal of the IF amp but also an input terminal of detector circuit 1.

5. Detector section

Pin 8 is connected to the detector and provides an output to pin 5, audio output. This output contains both audio frequency component (AC) and DC component.

6. AGC section (AGC by the reception frequency)

The DC component of the detector output at pin 5 is detected by AGC amp 1 at pin 1 by passing it through the filter consisting of R273 and C285. The AGC starts operating at an input level close to the maximum sensitivity. The output of AGC amp 1 is connected to AGC amp 2 and controls the gain of RF amp 1.
The AGC voltage is developed at pin 3 through AGC amp 3, and current flows through D251 and D252, lowering the impedance. As a result, attenuation is effected.
When Q253 turns on and the load impedance of the drain of Q251 is lowered, attenuation is effected. These attenuations due to the decrease in impedance enable AGC opera-

tion. The input level to develop a voltage at pin 3 is about 55 dBμV during reception of MW 999 kHz.
Thanks to the AGC operation mentioned above, the output variation characteristics against input variation are broader than the conventional AM characteristics.

7. **AGC section (wide-band AGC)**
The wide-band AGC is to control the gain of the RF amplifier section when the input RF level at pin 16 is high. This is intended to prevent interference due to the saturations of RF amp Q251, RF amp 1 in the IC, etc. Caused by a large input other than the reception frequency.
Operation is as follows: A DC voltage corresponding to the level of the input RF is developed at pin 2 by amplifying and detecting the RF signal from pin 16 by RF amp 2 and detector 3 respectively. This is delayed by the time constant of C284 and the gain of this portion is determined by R270. By applying this DC voltage to AGC amp 2, the AGC at RF amp 1 and AGC at Q253, D251 and D252 are effected.

8. **Stop signal**
The stop signal for seek operation is produced by extracting the IF signal from the secondary winding of T8 and adjusting its level by R287, R286 and R285. This signal is connected via 450 kHz filter CF252 from pin 7 to IF amp 2 to detector 2. This output appears at pin 6 and becomes 0V during reception.

9. **Local station/distant station seek**
During local station seek, Q252 turns on, whereby C253 is grounded. The impedance of C253 allows attenuation in the antenna system.

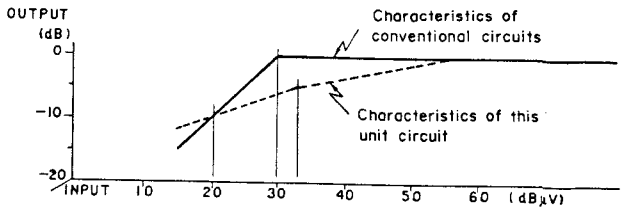

Fig. 7

• Frequency Synthesizer Section (FM)

During FM reception, a combination of synthesizer control IC301 (the frequency dividing ratio is controlled to 1/64 or 1/66 by IC301) allow the slower counter method.
The FM VCO is frequency-divided to a ratio of 1/64 or 1/66 by prescaler IC301.
An output of 4.5 MHz (X101) which becomes a clock pulse for IC301 is divided into 1/180 by the reference frequency divider to produce 25 kHz (all this is processed inside IC301). Since the reception frequency is 87.5 ~ 108.0 MHz and the intermediate frequency (IF) is 10.7 MHz, the oscillator frequency of VCO will be 98.2 ~ 118.7 MHz.
As the overall frequency division ratio is 7856 ~ 9496, the output of the programmable counter inside IC301 will be 25 kHz. This output is compared in phase with a reference frequency of 25 kHz by the phase detector in IC301, and is output to pin 12 of IC301.
The loop filter consisting of Q310 and Q312 converts the signal into a DC voltage signal which in turn controls the tuning circuit in the front end section as a tuning voltage.

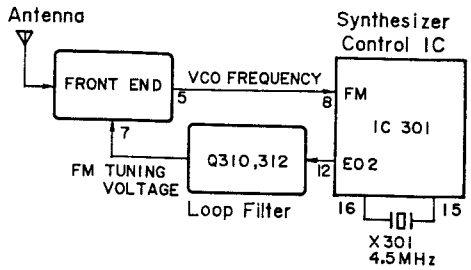

Fig. 8

• Frequency Synthesizer Section (MW)

The MW section employes a direct frequency dividing method. So that the reception frequency is incremented in 9 kHz, the frequency of the phase comparator is 9 kHz. This is produced by dividing 4.5 MHz (the output of X101), a clock frequency of IC301, to 1/500. Since the reception frequency range is 531 ∼ 1,602 kHz and the intermediate frequency is selected at 450 kHz, the frequency of the local oscillator (VCO) will be 981 ∼ 2,052 kHz.
This output is output from pin 12 of IC5 and enters pin 9 of IC301.
If the frequency dividing ratio of the programmable counter in IC301 is set to 109 ∼ 228, the output will be 9 kHz. This frequency is compared in phase with a reference frequency of 9 kHz by the phase comparator and is output from pin 12 of IC301.
The signal is converted into a DC voltage signal by the loop filter consisting of Q310 and Q311, which in turn controls the tuning circuit as a tuning voltage.

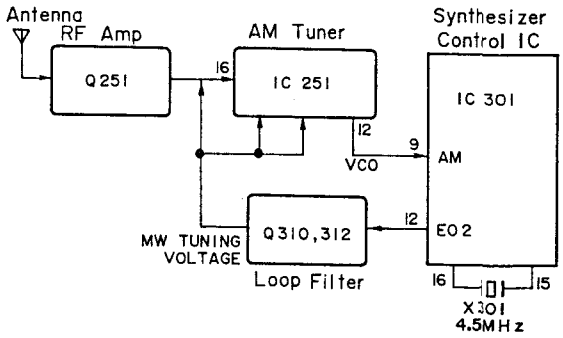

Fig. 9

• The Functions of Control IC (PD4041)

PD4041 is a 52-pin flat package C-MOS LSI which controls 10 kHz incremental tuning for FM, 9 kHz incremental tuning for AM. This PLL type frequency synthesizer tuner control IC makes possible 7-segment digital display. Since this IC employs a static method for the display driver, the performance of the receiver is improved.

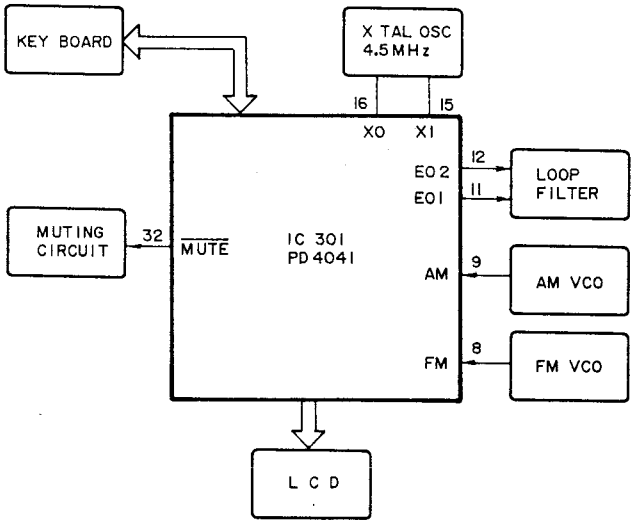

Fig. 10

• Frequency Synthesizer Section (LW)

The LW section employs a direct frequency dividing method. So that the reception frequency is incremented in 1 kHz, the frequency of the phase comparator is 1 kHz. This is produced by dividing 4.5 MHz (the output of X101), which is a clock frequency of IC301, into 1/4500.
Since the reception frequency range is 155 ~ 281 kHz and the intermediate frequency is selected at 450 kHz, the frequency of the local oscillator (VCO) is 605 ~ 731 kHz. This output is output from pin 12 of IC251 and enters pin 9 of IC301.
IF the frequency dividing ratio of the programmable counter in IC301 is set to 605 ~ 731, the output frequency is 1 kHz. This is compared in phase with a reference frequency of 1 kHz by the phase comparator and is output from pin 11 of IC301. The output signal is converted into a DC voltage signal by the loop filter consisting of Q311 and Q312, which in turn controls the tuning circuit as a tuning voltage.

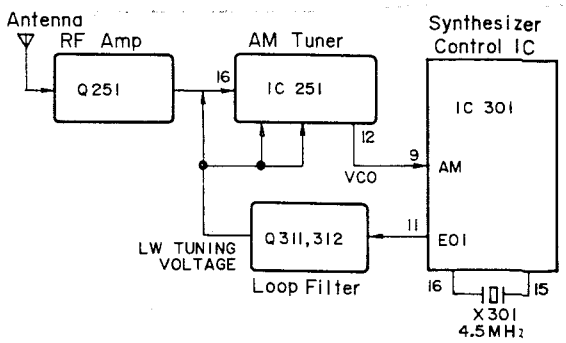

Fig. 11

• Control IC PD4041

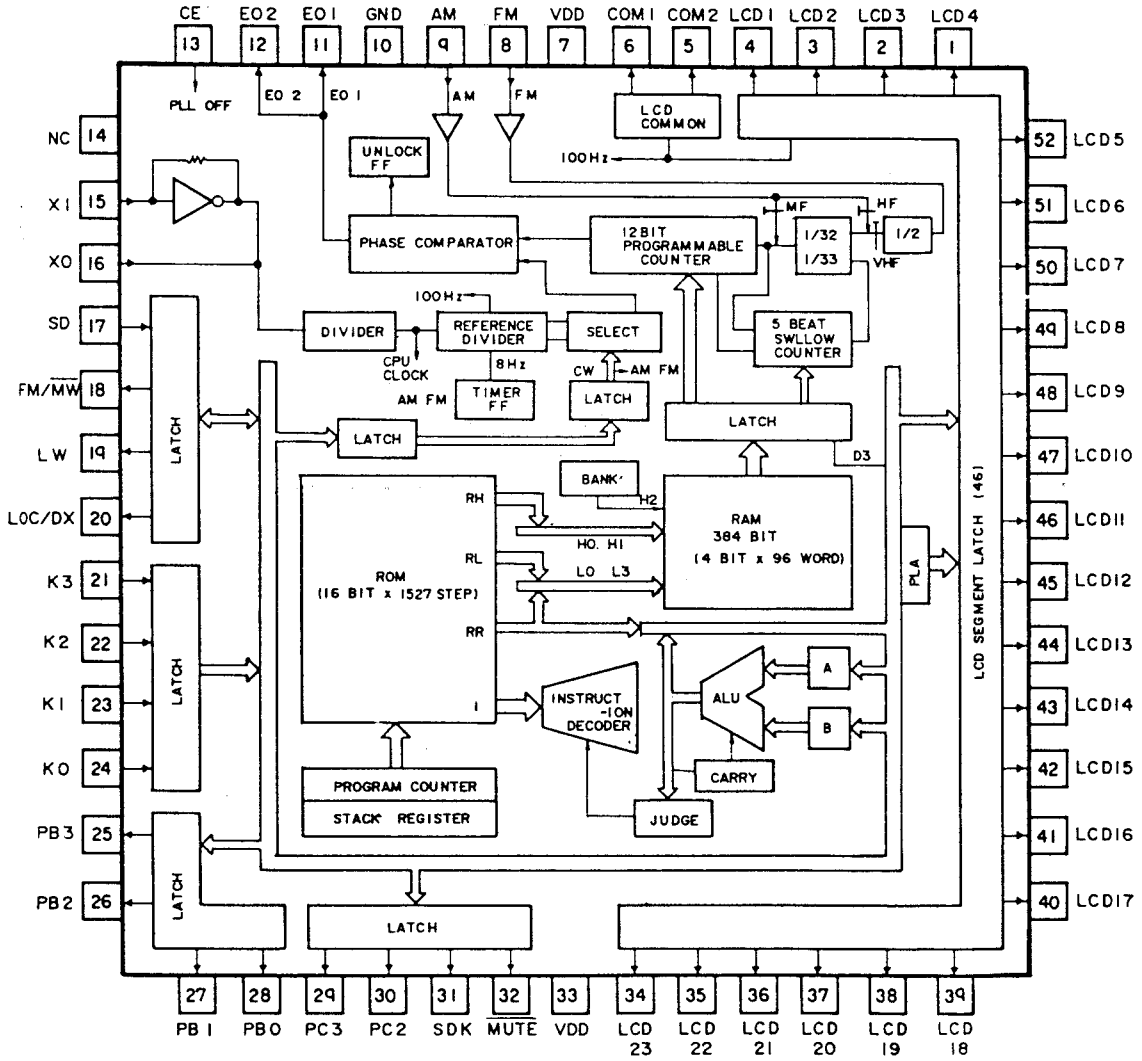

Fg. 12

• PIN FUNCTIONS (PD4041)

Pin No.	Pin Name	I/O	Function and Operation
34 ~ 52 1 ~ 4	LCD23 ~ LC5 LCD4 ~ LCD1	OUT	These are the segment signal output terminals to the LCD panel. Using the matrix of COMON 1 and COMON 2, up to an maximum of 46 dots can be display. The data output format will use PLA for the numerical figures. Symbols and letters data will be directly output from the data memory (RAM).
5 6	COM 2 COM 1	OUT	These are the common signal output terminals to the LCD panel. The three values of GND, 1/2VDD, and VDD (5ms intervals) will be output in 50 Hz cycles. The segment that registers and I VDD voltage differential between these terminals and LCD 1-LCD 23, will light up.
7 33	VDD VDD		These are the power supply terminals for the device, supplying a voltage of 5V ± 10% when the device is operating. The voltage can be lowered to 2.5V when the internal data memory (RAM) is to be maintained (carry out CKSTP command). The device will be recept when a voltage of zero −4.5V is supplied to this terminal, and a program will start from address 0. **NOTE:** Since pin 7 and pin 33 are connected together inside the divice it is sufficient to supply the power voltage to one of these terminals.
8	FM	IN	This accepts the VCO output from 10 ~ 155 MHz (0.5 Vp-p MIN). This is divided down by 1/2 inside the device by using the pulse swallow method. It also features a built-in AC amplifier, and therefore the DC components should be removed from the signal by using a capacitor first before entering the signal into the device.
9	AM	IN	This accepts the VOC output from 0.5 ~ 50 MHz (0.3 Vp-p MIN). This is selected and goes active when the direct dividing method is used. It also features a built-in AC amplifier, and therefore the DC components should be removed from the signal by using a capacitor first before entering the signal into the device.
10	GND		GND Terminal
11 12	EO1 EO2	OUT	This is the charge pump output from the phase detector that forms the PLL. When the divided oscillation frequency is higher than the reference frequency, these terminals will output a high level signal. When the divided oscillation frequency is lower than the reference frequency, these terminals will output a low level signal. Since the same signal will be output from both EO1 and EO2, either terminal can be selected as desired.
13	CE	IN	This is the device select signal input terminal. This terminal should be set to high level when the device is to be operated normally, and set to low level when the device will not be used. However it will not accept an input under 135 μs.
14	NC		
15 16	XI XO	IN	This the quartz oscillator connection terminal to which is connected a 4.5 MHz quartz oscillator. Adjust the oscillation frequency (4.5 MHz) by monitoring terminal XO.
17	SD	IN	During auto tuning and SDK search, this input terminal detects whether a broadcast station has been received or not. It will stop the tuning when a high level input is received. (Read in SDK STP and AND for SDK search) However, an input must be received within 45ms after the PLL has locked. (Within 75ms for LW reception)
18 19	FM/$\overline{\text{MW}}$ LW	OUT	This is the FM/MW/LW select signal which is output from the device.
20	LOC/DX	OUT	This is the LOC/DX select signal which is output from the device. A high level signal will be output for the LOC mode.
21 ~ 24	K3 ~ K0	IN	These are the key return signal input terminals for an external key matrix.
25 ~ 28 29 30	PB3 ~ PB0 PC3 PC2	OUT	These are the key return signal source terminals, set to active high. The external diodes can be deleted.
31	SDK	OUT	High level signals from the device are output to this terminal for the SDK mode (Traffic information etc).
32	$\overline{\text{MUTE}}$	OUT	This muting output terminal, set to active low, eliminates the shock noise when the PLL lock is disengaged.

PIONEER

Service Manual

REPAIR & ADJUSTMENTS

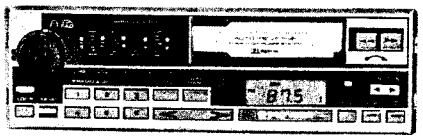

The photo shows the model KEH-9300SDK

ORDER NO.
CRT-387-0

CASSETTE CAR STEREO WITH FM/MW/LW ELECTRONIC TUNER

KEH-9300SDK WG

KEH-9300 EW

CASSETTE CAR STEREO WITH FM/AM ELECTRONIC TUNER

KEH-9000 ES

- For the circuit and mechanism descriptions, please refer to the service manual (CRT-398).
- 'Dolby' and the double-D symbol are trademarks of Dolby Laboratories Licensing Corporation.
- Noise Reduction System manufactured under license from Dolby Laboratories Licensing Corporation.

CONTENTS

PIONEER ELECTRONIC CORPORATION 4-1, Meguro 1-Chome, Meguro-ku, Tokyo 153, Japan
PIONEER ELECTRONICS [USA] INC. P.O. Box 1760, Long Beach, California 90801 U.S.A.
PIONEER ELECTRONIC [EUROPE] N.V. Keetberglaan 1, 2740 Beveren, Belgium
PIONEER ELECTRONICS AUSTRALIA PTY. LTD. 178-184 Boundary Road, Braeside, Victoria 3195, Australia

- Cassette Mechanism Unit
  See the Service Manual CX-146/C (CRT-324) when servicing the cassette mechanism unit.
  The differences from the CX-146/C are shown below.

Exploded View (Page 14)

CX-146/C				KEH-9300SDK, 9300, 9000	
Mark	No.	Part No.	Description	Part No.	Description
	38.	CNL-286	P.C. Board	CNP-925	P.C. Board
★★	41.	CPB-102	Head	CPB-066 or CPB-356	Head

1. PARTS LOCATION

- **KEH-9300SDK**

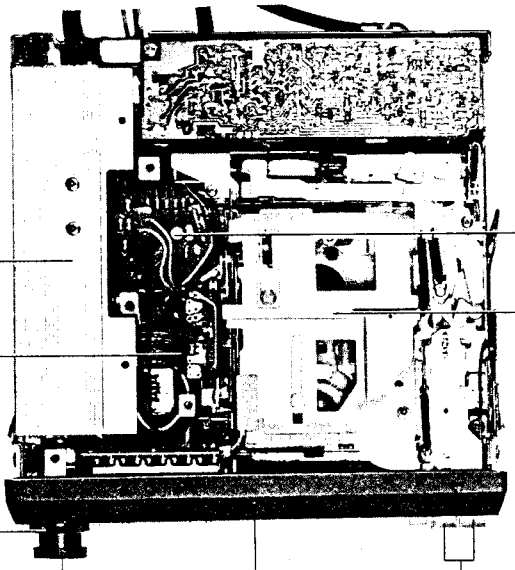

Fig. 1

- **KEH-9300, 9000**

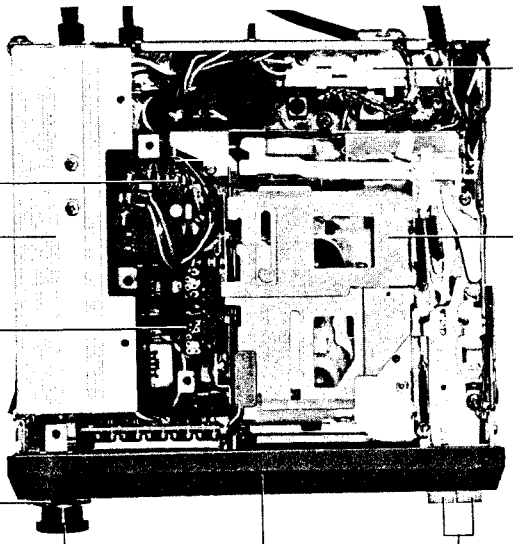

Fig. 1

2. DISASSEMBLY

• Removing the Case Unit

1. Remove the six screws and then take off the case unit.

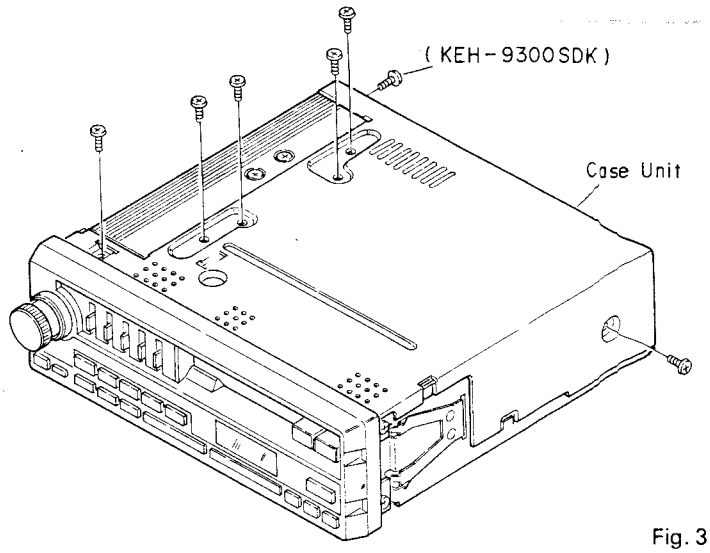

Fig. 3

• Removing the Grille Assy

1. Remove the two knobs.
2. Remove the four screws and remove grille assy.

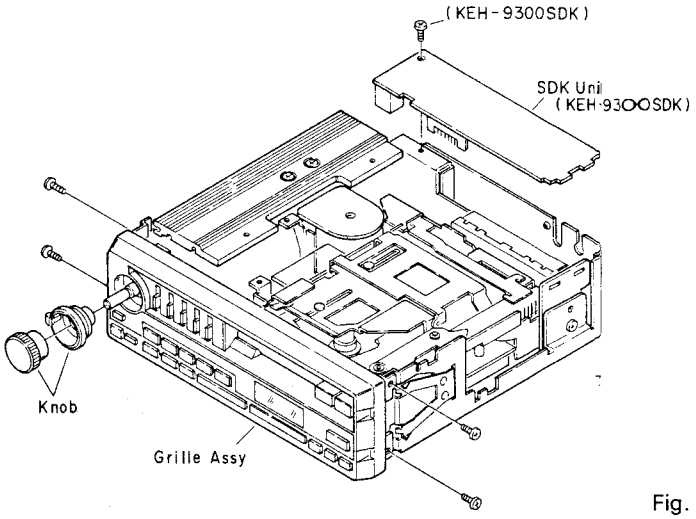

Fig. 4

• Removing the Cassette Mechanism Assy

1. Remove the screw and then take off the SDK Unit. (Shown in Fig. 4 . . . . . KEH-9300SDK)
2. Remove the three screws and remove cassette mechanism assy.

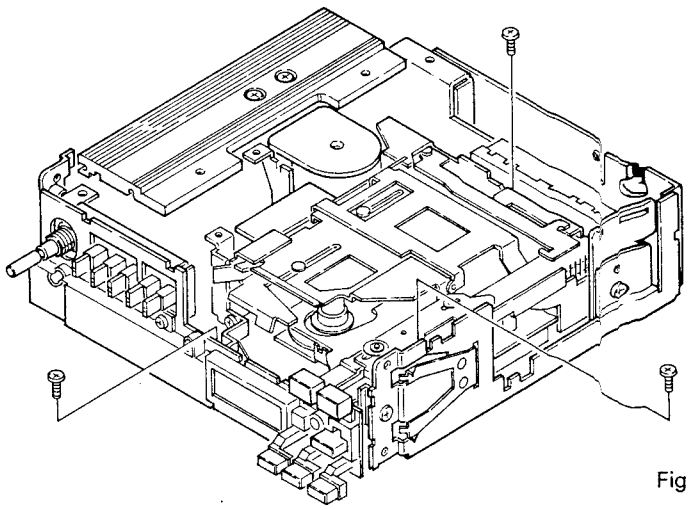

Fig. 5

3. ADJUSTMENT

3.1 DOLBY NR LEVEL ADJUSTMENT

• Connection Diagram

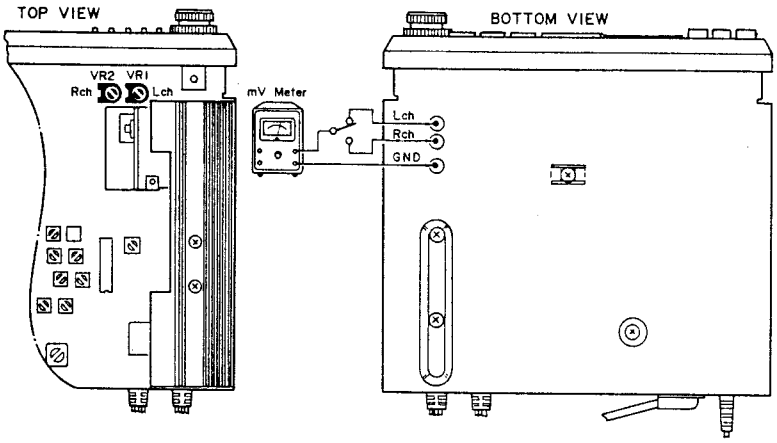

Fig. 6

• To Adjust

1. Set the Dolby NR switch to OFF.
2. Playback the Dolby NR level calibration tape CT-150 (400 Hz, 200nwb/m) and adjust VR1 (L ch), VR2 (R ch) so that the mV meter shows 300mV ± 1dB. (300mV = −8.24dBs)

3.2 DECODER ADJUSTMENT

• Connection Diagram

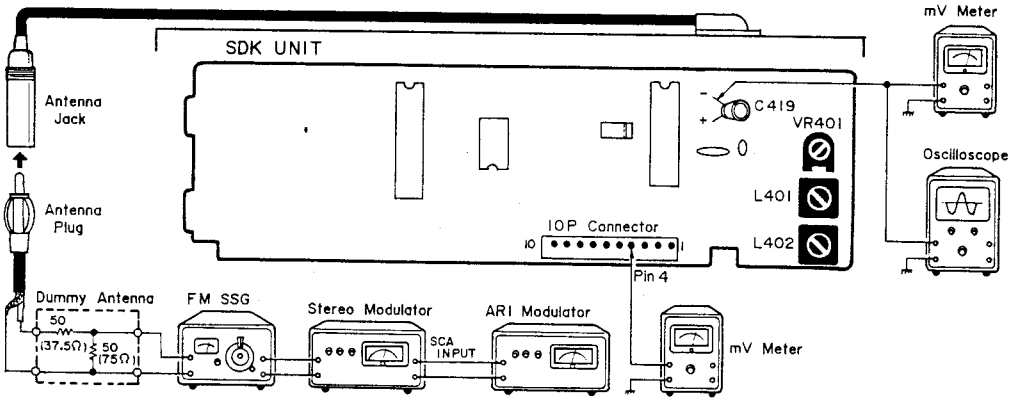

Fig. 7

• To Adjust

1. Set the FM SSG as follows:
   Carrier: 98 MHz
   Modulation (audio): 400 Hz, 60%
   Modulation (SK) 57 kHz, 5%
2. Adjust the output of SSG so that the amplitude of indicator of mV meter connected to the terminal No. 4 becomes 2.75 mV ~ 3 mV.
3. Adjust L401 and L402 so that the amplitude of indicator of mV meter connected to C419 becomes maximum.
4. Adjust VR401 so that SDK lamp lights on.

3.3 FM IF ADJUSTMENT

• Connection Diagram

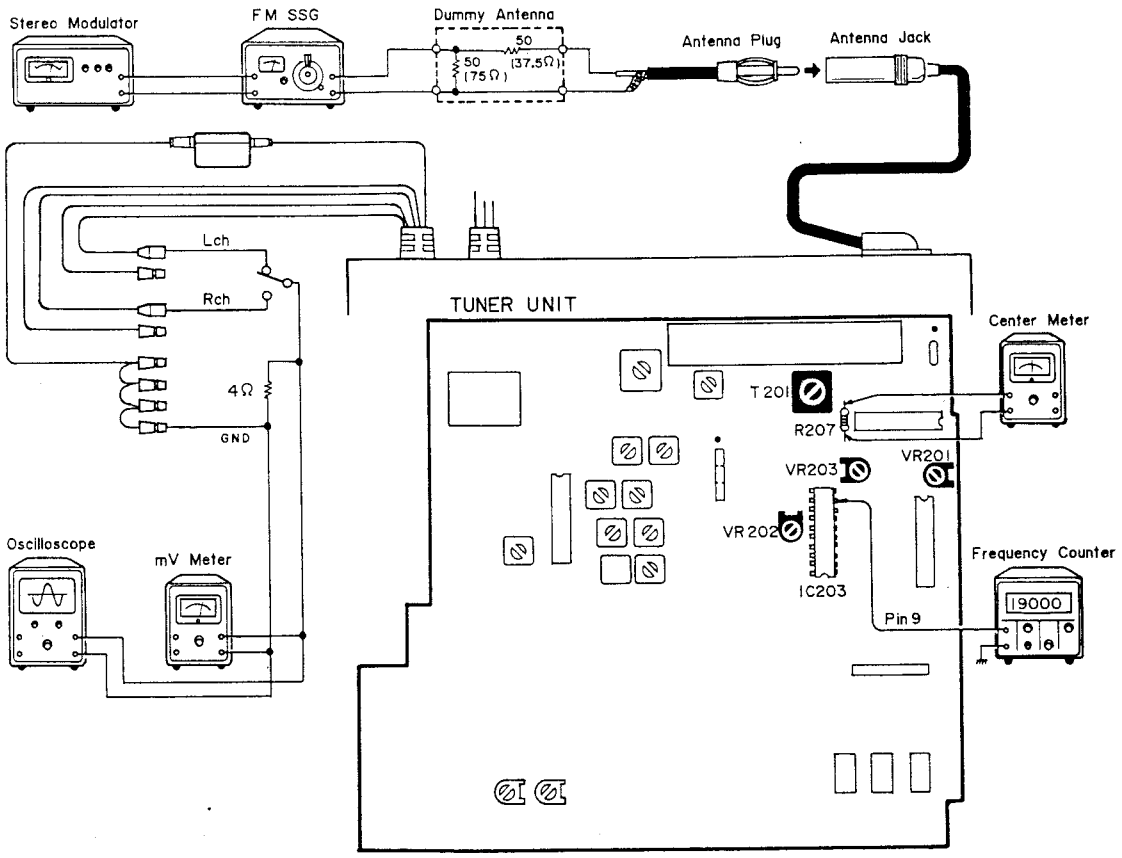

Fig. 8

• To Adjust

1. Set the Mono switch to MONO.
2. Apply a signal of 98MHz, 400Hz 30% modulation and 60dB (μV) from the FM SSG and tune 98MHz.
3. Adjust T201 to make the center meter show 0.

3.5 SEPARATION ADJUSTMENT

• Connection Diagram (Show in Fig. 8)

• To Adjust

1. Apply a signal of 98MHz, 1kHz 90% modulation and 19kHz 10% modulation and 60dB (μV) from the FM SSG. Tune into a frequency of 98MHz.
2. Adjust VR202 to obtain the best separation. (At this time VR201 is turned in a counterclockwise direction.)

3.4 FM MPX ADJUSTMENT

• Connection Diagram (Show in Fig. 8)

• To Adjust

1. Apply an unmodulated signal of 98MHz and 60dB (μV) from the the FM SSG. Tune into a frequency of 98MHz.
2. Adjust VR203 to make frequency counter show 19kHz ± 30Hz.

3.6 FM ARC ADJUSTMENT

• Connection Diagram (Show in Fig. 8)

• To Adjust

1. Set the Mono switch to AUTO.
2. Apply a signal of 98MHz, 1kHz 90% modulation and 19kHz 10% modulation and 35dB (μV) from the FM SSG. Tune into a frequency of 98MHz.
3. Adjust VR201 to obtain a 5dB separation.

3.7 FM TRACKING ADJUSTMENT

• Connection Diagram

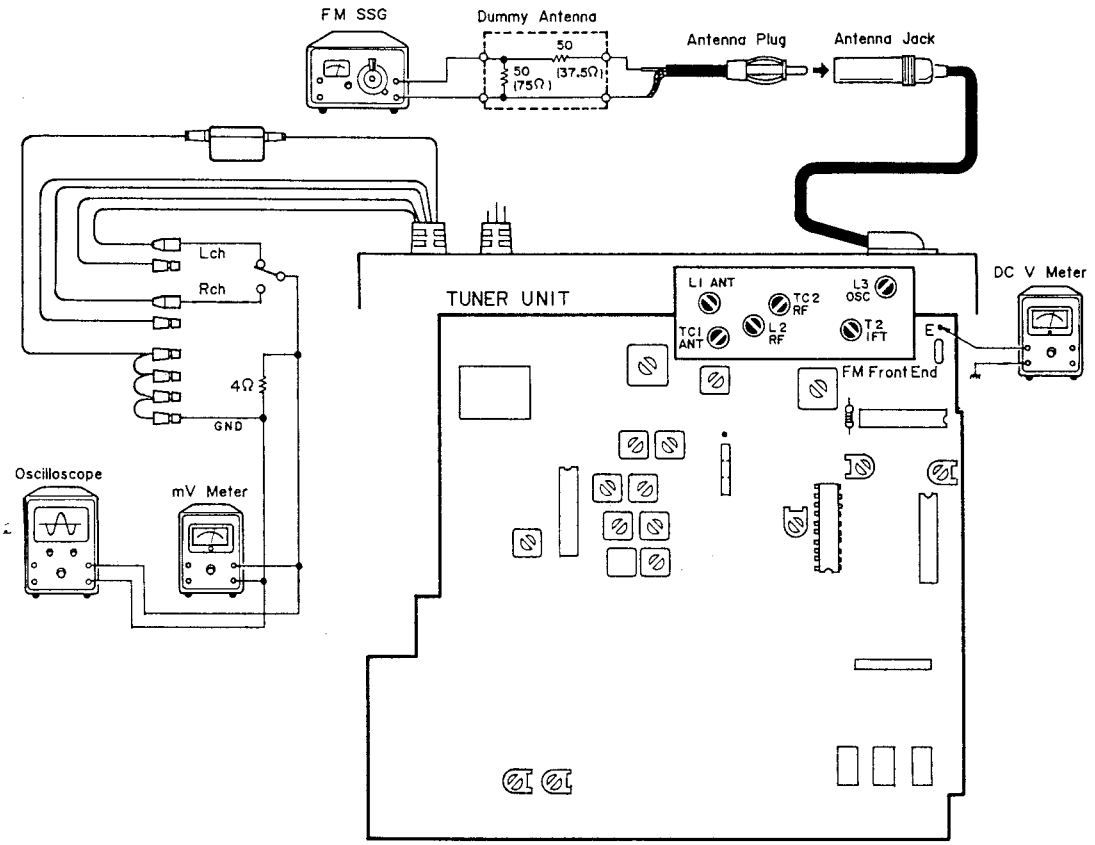

Fig. 9

• To Adjust

Frequency of FM SSG	Displayed Frequency	Adjusting Point	DC V Meter	mV Meter
1.	108 MHz	L3	8.5 ± 0.2 V	
2.	87.5 MHz		2.2 ± 0.6V check	
3. 90 MHz (400 Hz, 100% modulation) output level 5 ~ 10 dB (μV)	90 MHz	L1, L2		Maximum output
4. 106 MHz (400 Hz, 100% modulation) output level 5 ~ 10 dB (μV)	106 MHz	TC1, TC2		Maximum output
5. Repeat steps (3) and (4) alternately so that the mV meter indicates maximum output.				
6. 98 MHz (400 Hz, 100% modulation) output level 5 ~ 10 dB (μV)	98 MHz	T2		Maximum output

3.8 AM IF ADJUSTMENT

• Connection Diagram

IF Generator Scope

Sweep center frequency 450kHz
Input gain. 0.3Vp-p/cm

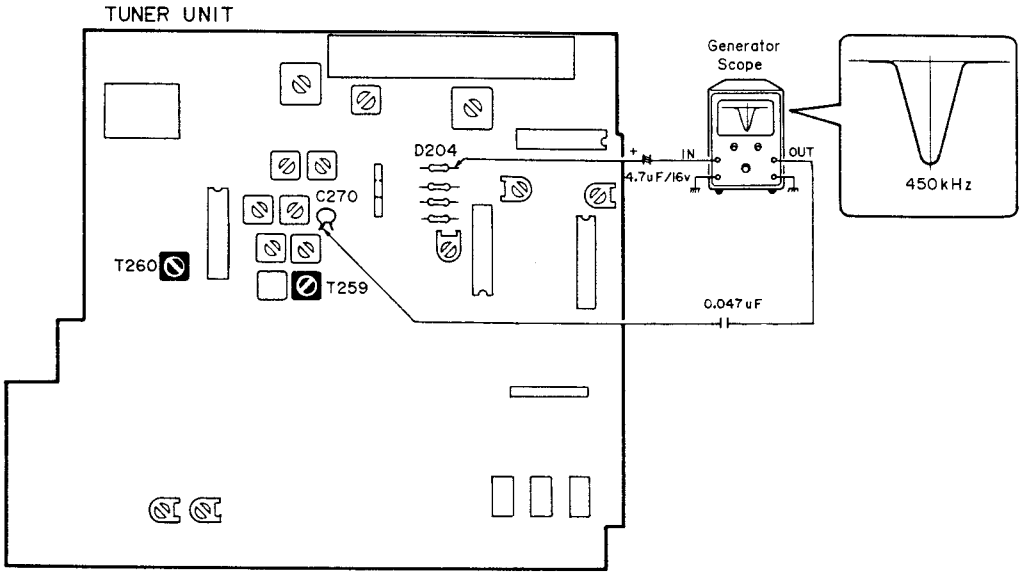

Fig. 10

• To Adjust

1. Apply minimum output signal required to check generator scope U curve and adjust T259 and T260 so that curve amplitude is at maximum point and there is optimum symmetry.

3.9 AM TRACKING ADJUSTMENT

• Connection Diagram

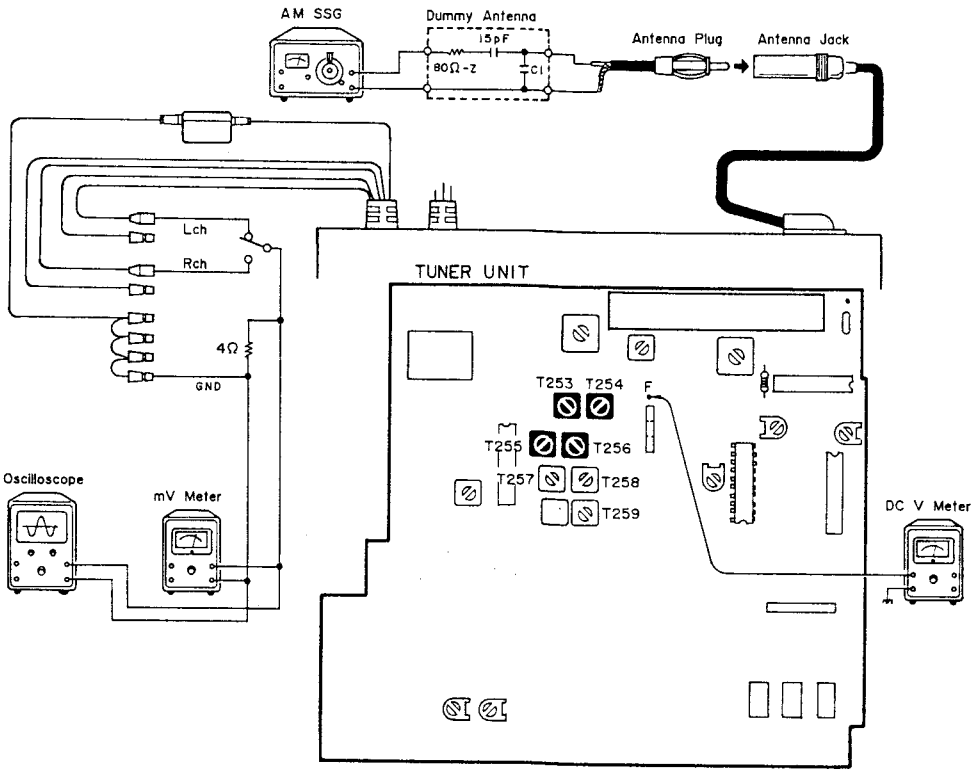

Fig. 11

NOTICE:
Select C1 so that total capacity of 80pF is attained from the direction of the receiver jack.
Z: Output impedance of the SSG.

• To Adjust (In case of MW)

Frequency of AM SSG	Displayed Frequency	Adjusting Point	DC V Meter	mV Meter
1.	531 kHz	For Confirmation Only	More than 0.8V	
2. 603 kHz (400 Hz, 30% modulation) output level 25 dB (μV)	603 kHz	T253, T255		Maximum output
3.	1,602 kHz	For Confirmation Only	More than 8.5V	

• To Adjust (In case of LW.....KEH-9300SDK, 9300)

Frequency of AM SSG	Displayed Frequency	Adjusting Point	DC V Meter	mV Meter
1.	153 kHz	For Confirmation Only	More than 2.5V	
2. 218 kHz (400 Hz, 30% modulation) output level 25 dB (μV)	218 kHz	T254, T256		Maximum output
3.	281 kHz	For Confirmation Only	More than 8.5V	

• IC's and Transistors

2SD1012

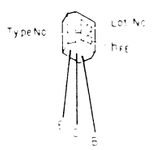

2SA937F
2SB822F
2SC2021F
2SD1055F

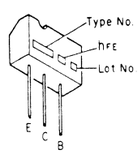

2SC2634NL

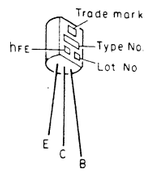

2SA1048
2SC2458

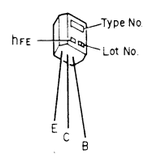

2SK241

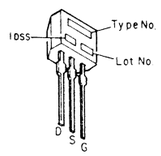

2SD1276

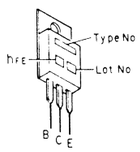

2SC2570

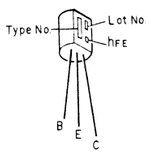

2SK330

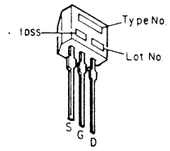

2SK163

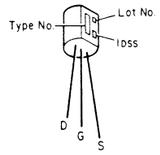

P003

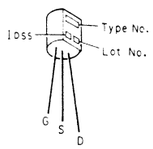

2SB709
2SC2712
2SD601

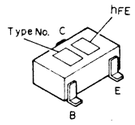

2SD655
2SD667

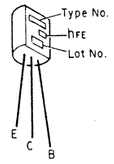

2SK30A

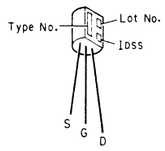

Part No.	Indication (Type No., hFE)
2SB709-AQ	AQ
2SB709-AR	AR
2SB709-AS	AS
2SC2712-LG	LG
2SC2712-LL	LL
2SC2712-LY	LY
2SD601-YQ	YQ
2SD601-YR	YR
2SD601-YS	YS

PA0014

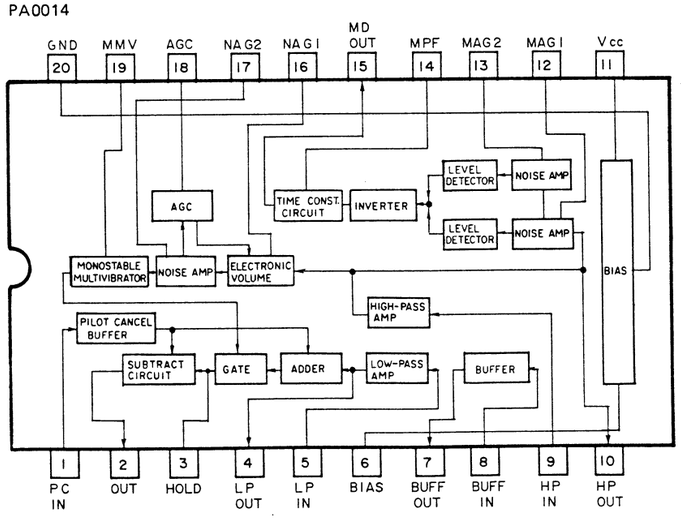

PA0013

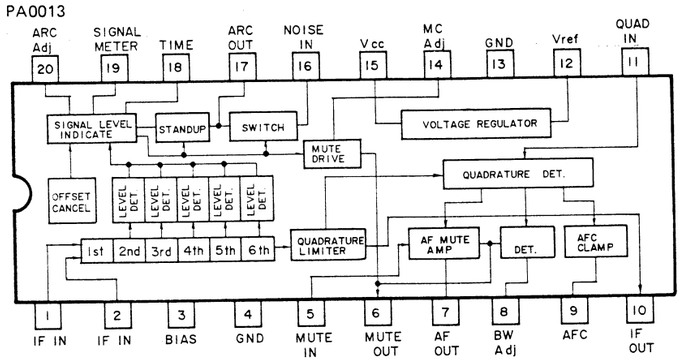

NR9200

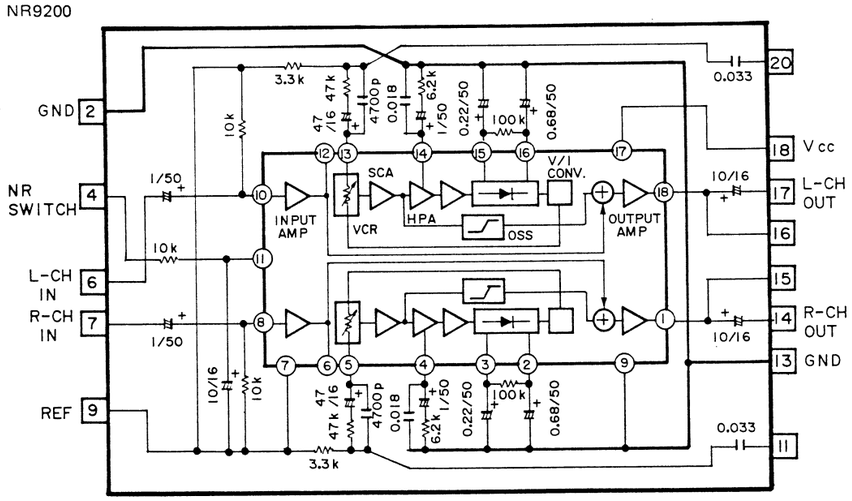

PA0015

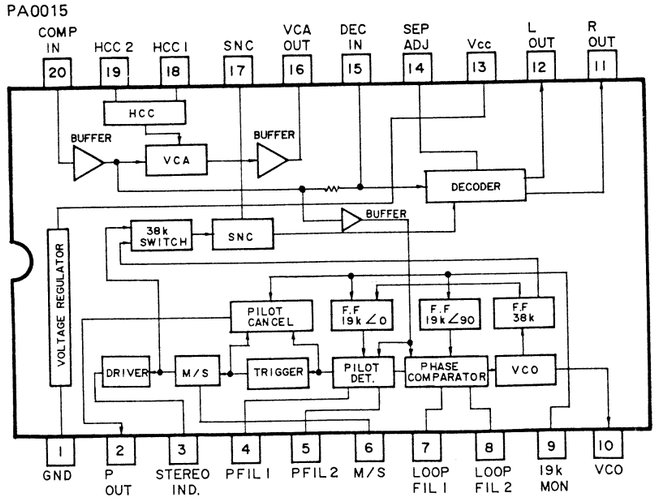

CWW-173

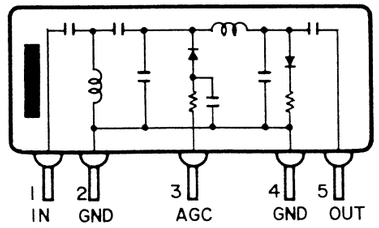

PA4009

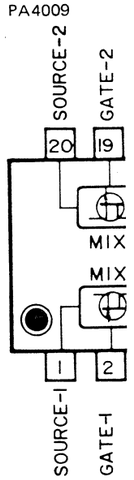

TA7270P

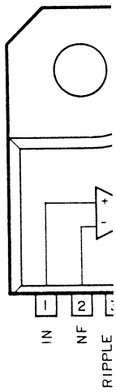

TA7271P

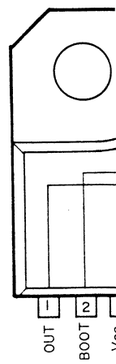

PA4009

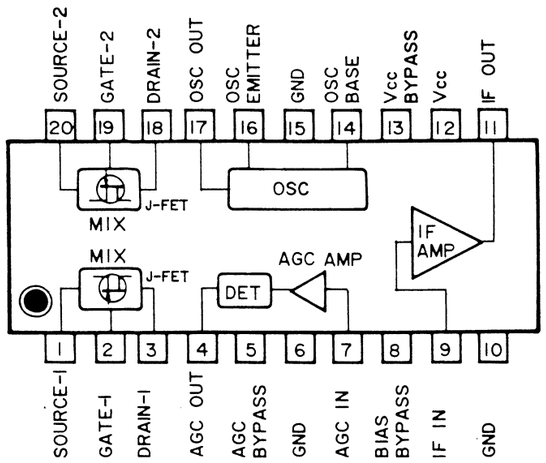

TA7270P

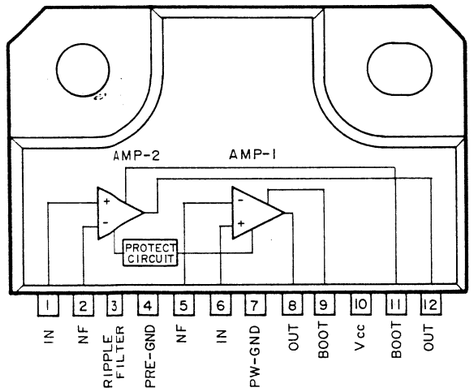

TA7271P

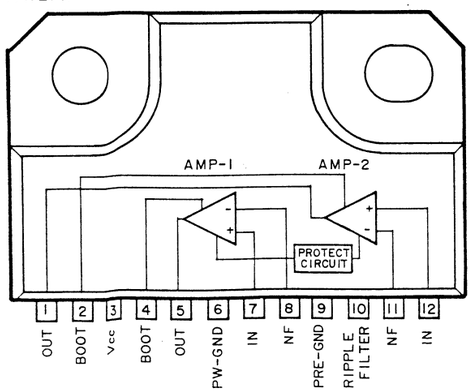

TA75558P

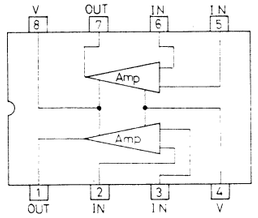

S0280

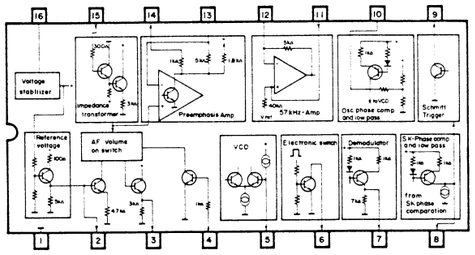

S551

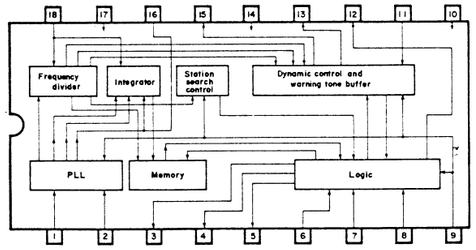

HA12434

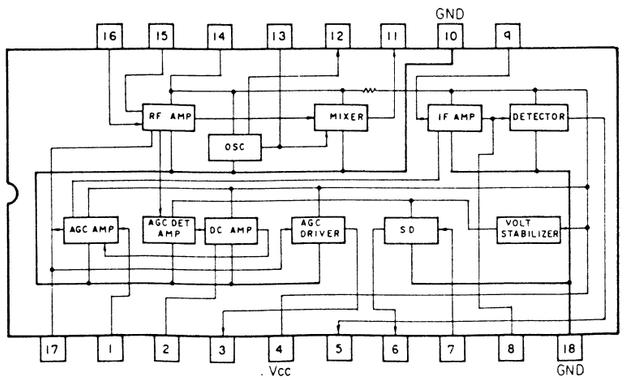

MB3106MF

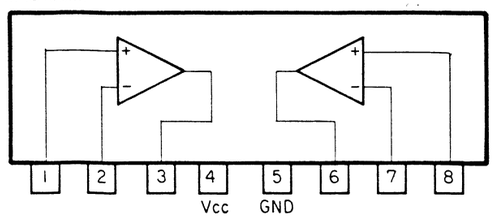

AN6540

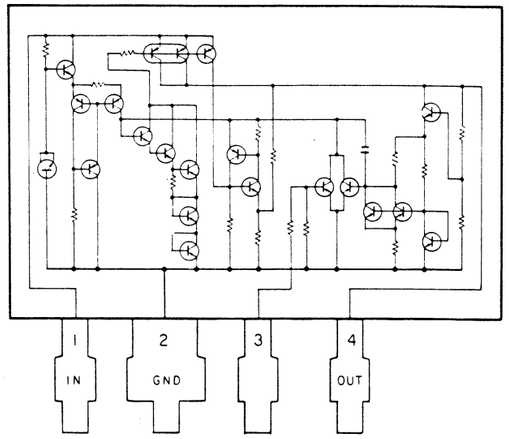

*IC's marked by * are MOS type.*
Be careful in handling them because they are very liable to be damaged by electrostatic induction.

* PD4041

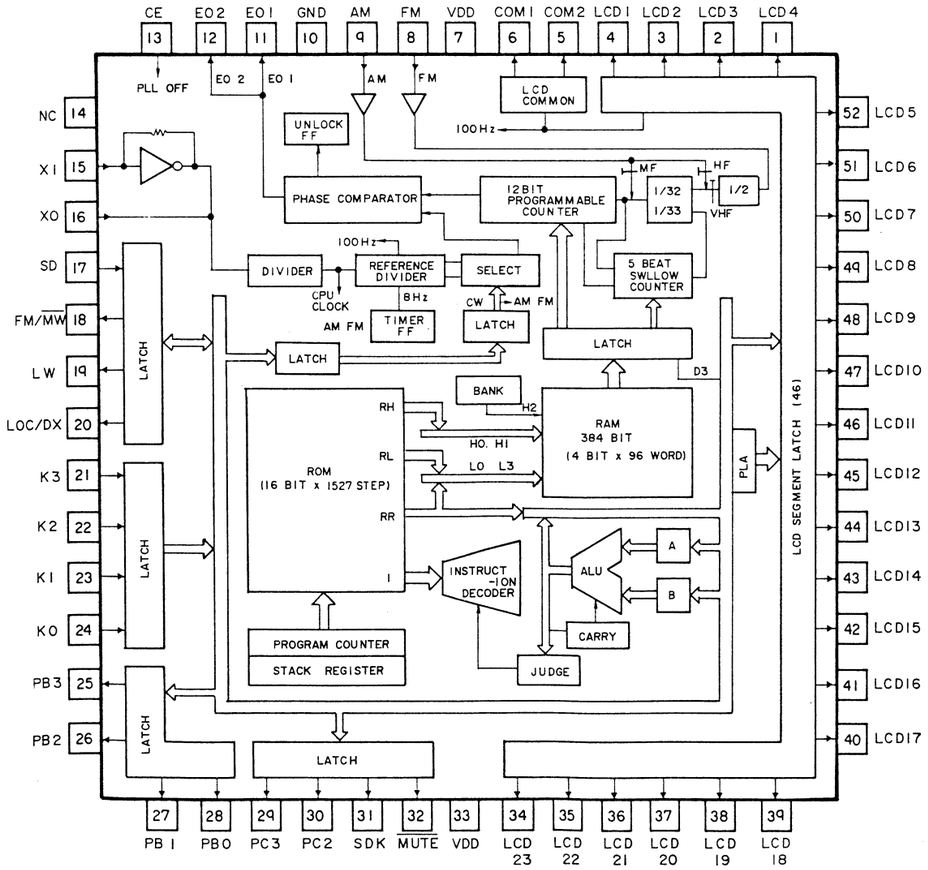

4. SCHEMATIC CIRCUIT DIAGRAM (KEH-9300SDK)

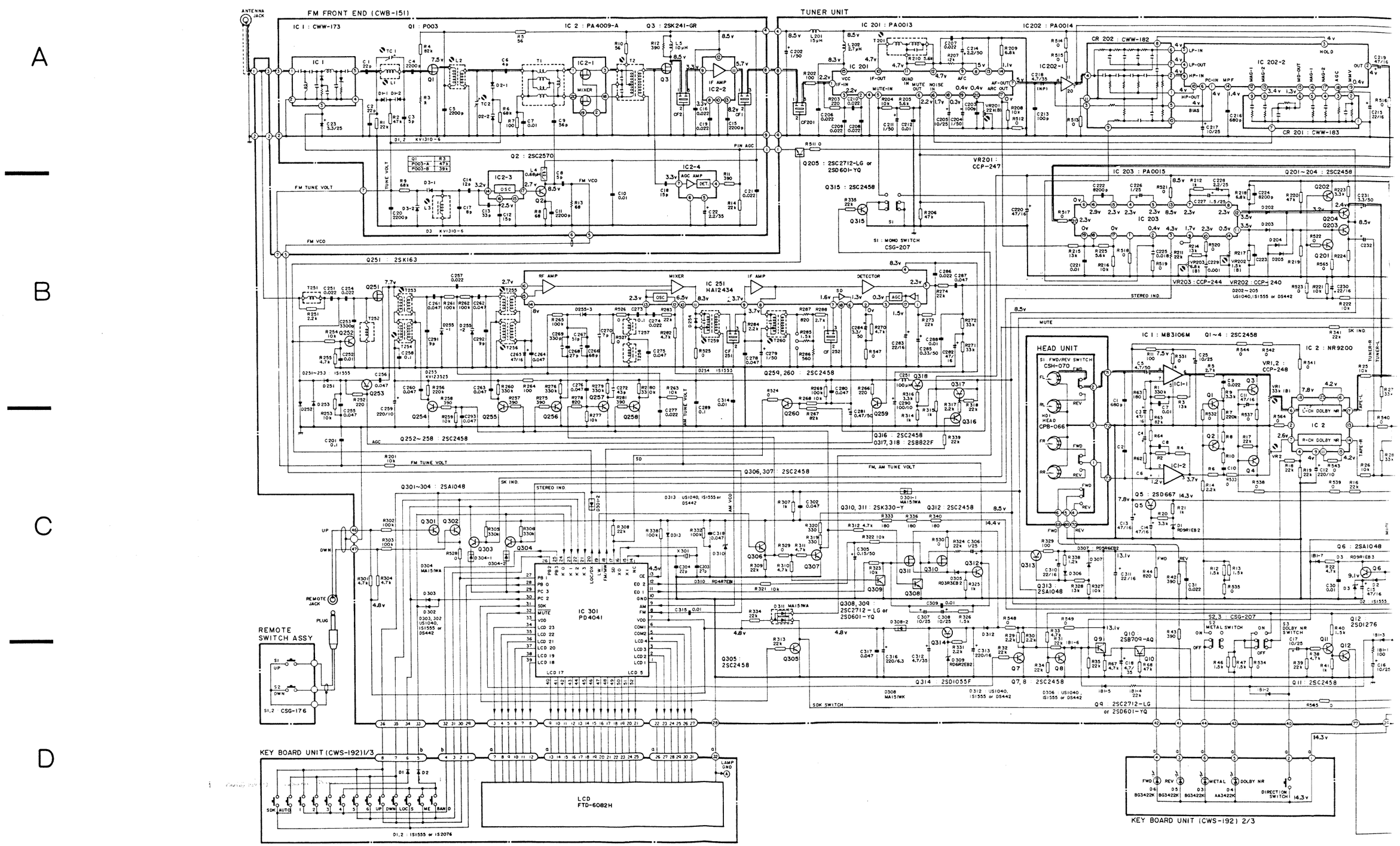

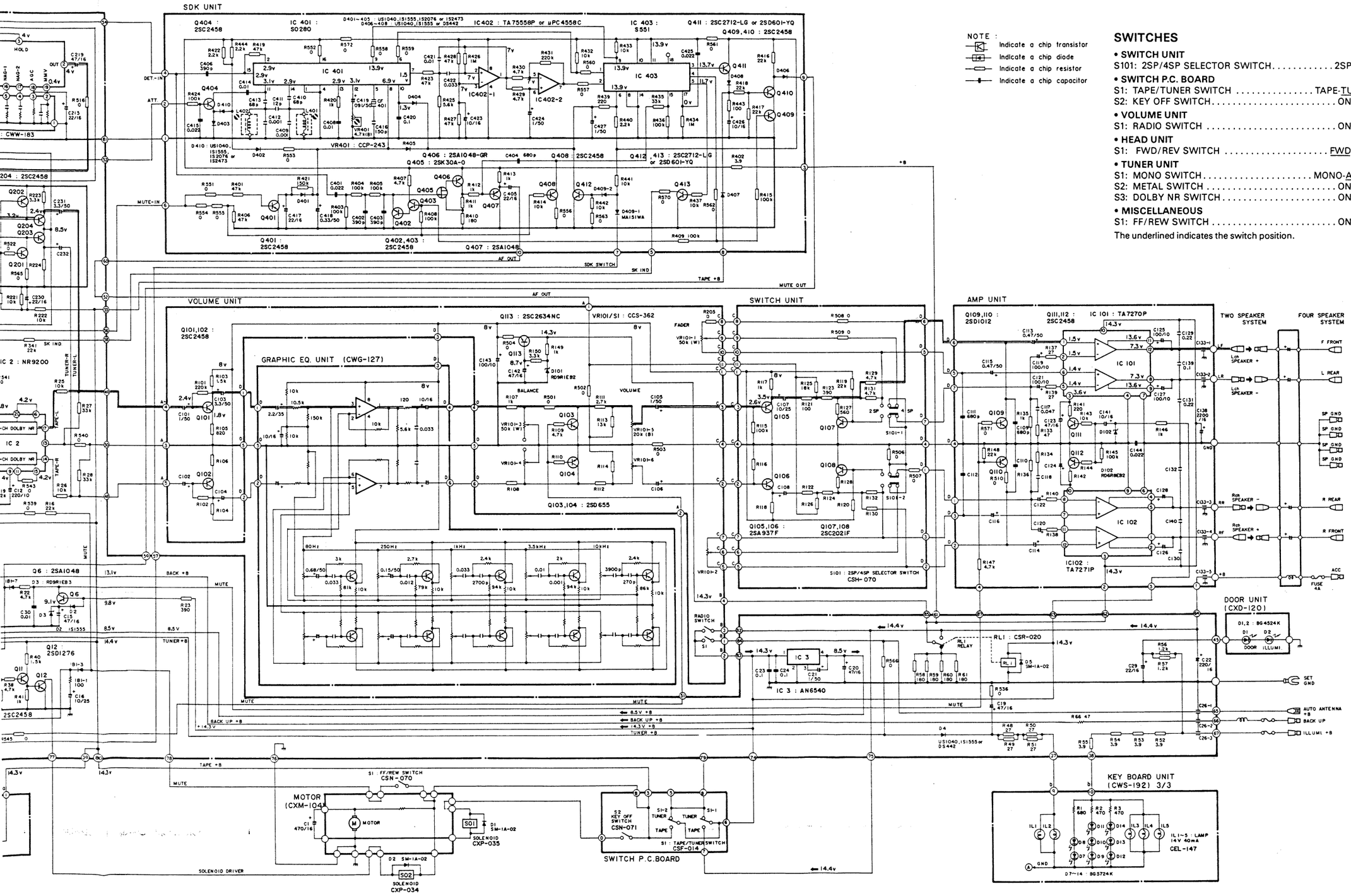

NOTE :
- Indicate a chip transistor
- Indicate a chip diode
- Indicate a chip resistor
- Indicate a chip capacitor

SWITCHES

• SWITCH UNIT
S101: 2SP/4SP SELECTOR SWITCH.....2SP-4SP

• SWITCH P.C. BOARD
S1: TAPE/TUNER SWITCH .....TAPE-TUNER
S2: KEY OFF SWITCH.....ON-OFF

• VOLUME UNIT
S1: RADIO SWITCH .....ON-OFF

• HEAD UNIT
S1: FWD/REV SWITCH .....FWD-REV

• TUNER UNIT
S1: MONO SWITCH.....MONO-AUTO
S2: METAL SWITCH .....ON-OFF
S3: DOLBY NR SWITCH.....ON-OFF

• MISCELLANEOUS
S1: FF/REW SWITCH .....ON-OFF

The underlined indicates the switch position.

Fig. 12

5. CONNECTION DIAGRAM (KEH-9300SDK)

FM FRONT END (CWB-151)

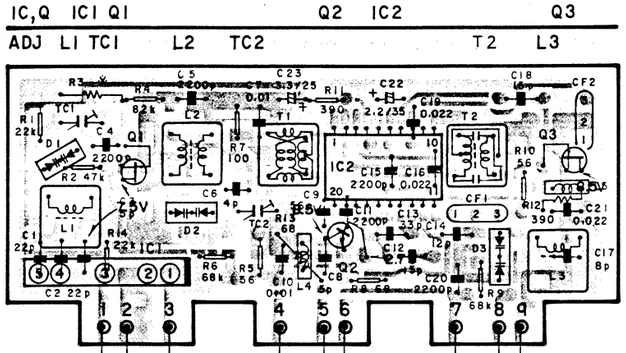

Q1	R3
P003-A	47k
P003-B	39k

IC1 : CWW-173 IC2 : PA4000-A Q1 : P003 Q2 : 2SC2570
Q3 : 2SK241-GR D1 ~ 3 : KV1310-6

FM FRONT END (CWB-151)

	1	2	3	4	5	6	7	8	9	10
IC 2	/	0	/	/	/	0	3.3	3.3	3.3	0
	11	12	13	14	15	16	17	18	19	20
IC 2	5.7	8.5	8.2	3.2	0	2.5	2.7	/	0	/

(V)

TUNER UNIT

	1	2	3	4	5	6	7	8	9	10	11	12	13	14	15	16	17	18	19	20
IC201	2.2	/	2.2	0	/	2.2	5.0	5.0	5.0	4.7	4.7	4.7	0	1.1	8.3	1.7	0	0.3	0.4	0.4
IC202	4.0	4.0	4.0	4.0	4.0	4.0	/	/	4.0	4.0	/	/	3.4	1.4	1.3	0	0	0	0.4	0
IC203	/	0.4	4.3	2.3	2.3	0	2.3	2.3	1.7	2.3	3.5	3.5	8.5	0.5	2.3	2.9	0	0	0	2.3
IC251	/	0	0.3	8.3	2.3	1.3	1.6	3.7	3.7		8.3	6.5	2.3	8.0	/	2.7	1.5	0		
IC 2	/	/	/	/	/	/	2.6	/	4.0	/	/	/	/	/	4.2	4.2	/	7.8	/	4.2

(V)

TUNER UNIT

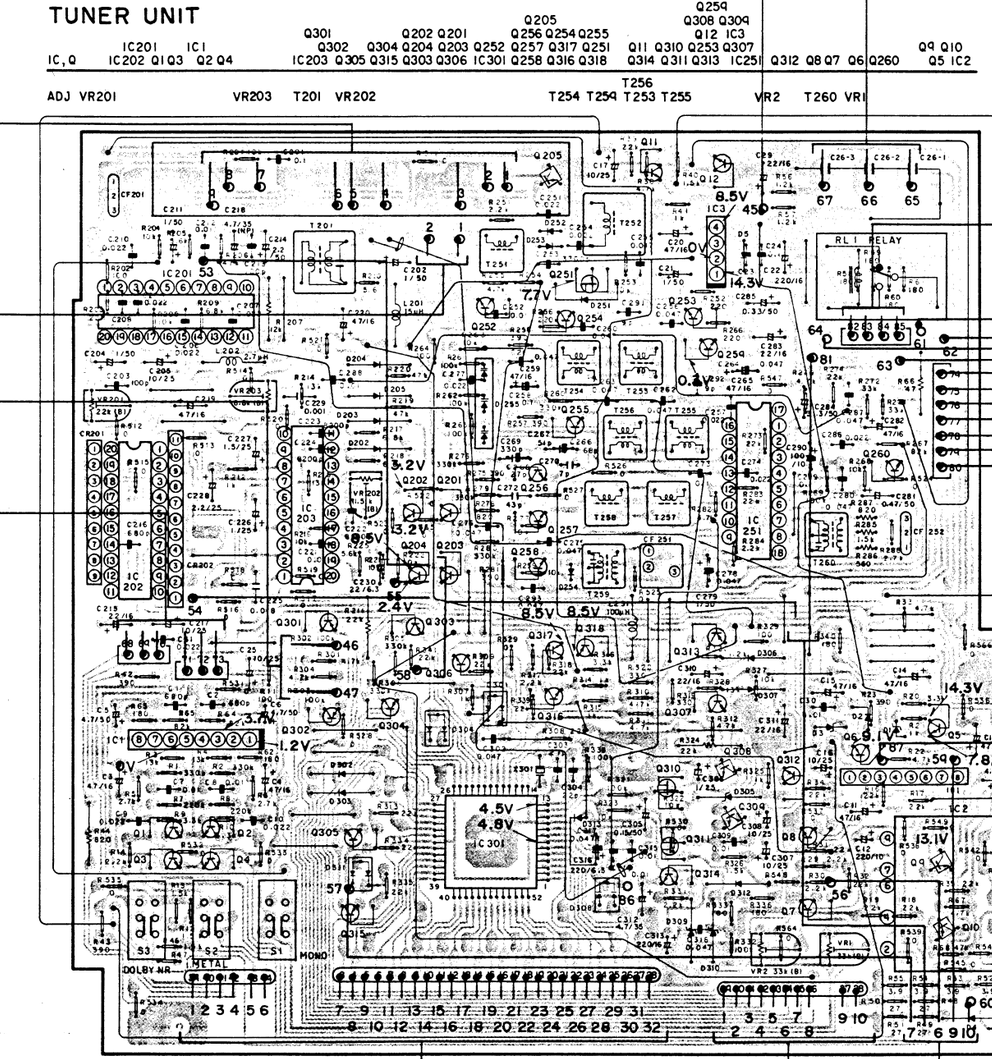

IC1 : MB3106M IC2 : NRQ200 IC3 : AN6540 IC201 : PA0013 IC202 : PA0014 IC203 : PA0015 IC251 : HA12434 IC301 : PD4041
Q1~4, 7, 8, 11 : 2SC2458 Q5 : 2SD667 Q6 : 2SA1048 Q9 : 2SC2712-LG or 2SD601-YQ Q10 : 2SB709-AQ Q12 : 2SD1276 Q201~204 : 2SC2458
Q205 : 2SC2712-LG or 2SD601-YQ Q251 : 2SK163 Q252~260 : 2SC2458 Q301~304, 313 : 2SA1048 Q305~307, 312, 315, 316 : 2SC2458
Q308, 309 : 2SC2712-LG or 2SD601-YQ Q310, 311 : 2SK330-Y Q314 : 2SD1055F Q317, 318 : 2SB822F
D1 : RD9R1EB2 D2 : 1S1555 D3 : RD9R1EB3 D4 : US1040, 1S1555 or DS442 D5 : SM-1A-02 D202~205 : US1040, 1S1555 or DS442
D251~254 : 1S1555 D255 : KV1235Z5 D301, 304, 311 : MA151WA D302, 303, 306, 312 : US1040, 1S1555 or DS442 D305 : RD3R3EB2
D307 : RD5R6EB2 D308 : MA151WK D309 : RD6R2EB2 D310 : RD4R7EB1 D313 : US1040, 1S1555 or DS442

DOOR UNIT (CXD-120)

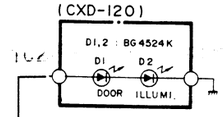

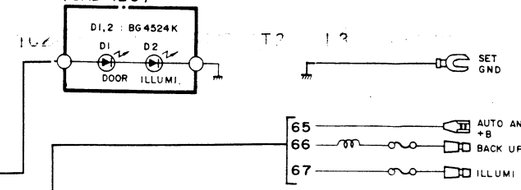

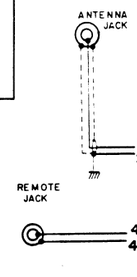

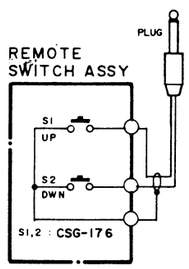

HEAD UNIT

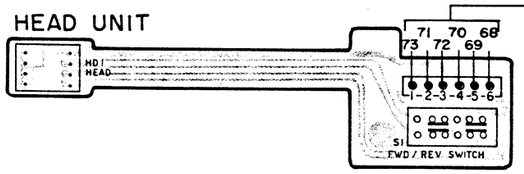

KEY BOARD UNIT (CWS-192)

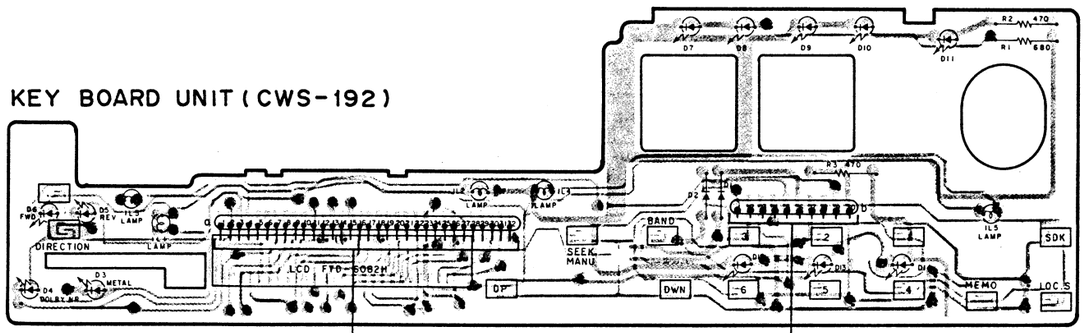

D1, 2 : 1S1555 or 1S2076 D3, 5, 6 : BG3422K D4 : AA3422K D7 ~ 14 : BG5724K

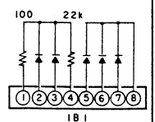

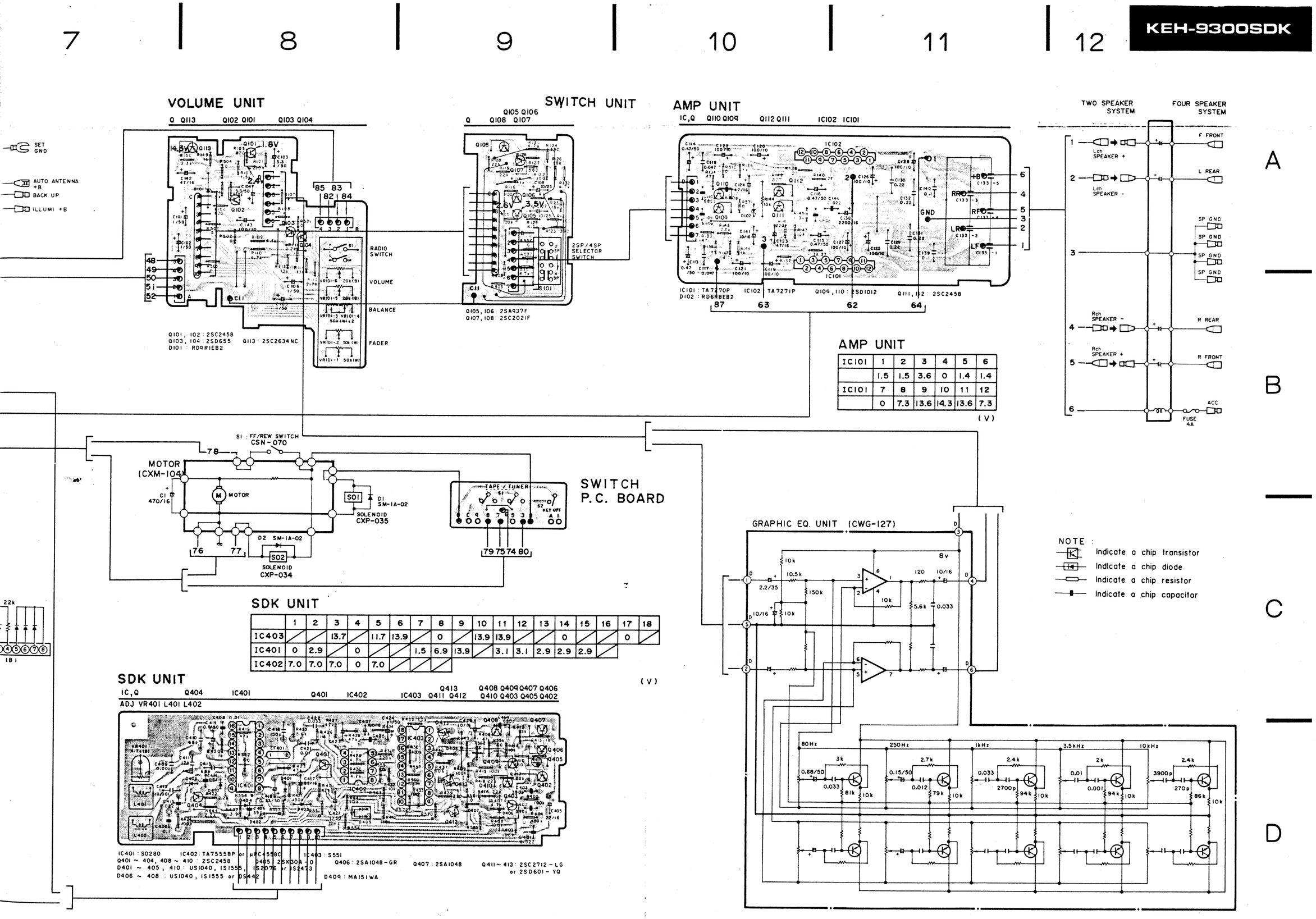

AMP UNIT

IC101	1	2	3	4	5	6
	1.5	1.5	3.6	0	1.4	1.4
IC101	7	8	9	10	11	12
	0	7.3	13.6	14.3	13.6	7.3

(V)

SDK UNIT

	1	2	3	4	5	6	7	8	9	10	11	12	13	14	15	16	17	18
IC403			13.7		11.7	13.9		0		13.9	13.9			0			0	
IC401	0	2.9		0			1.5	6.9	13.9		3.1	3.1	2.9	2.9	2.9			
IC402	7.0	7.0	7.0	0	7.0													

(V)

Fig. 13

6. SCHEMATIC CIRCUIT DIAGRAM (KEH-9300)

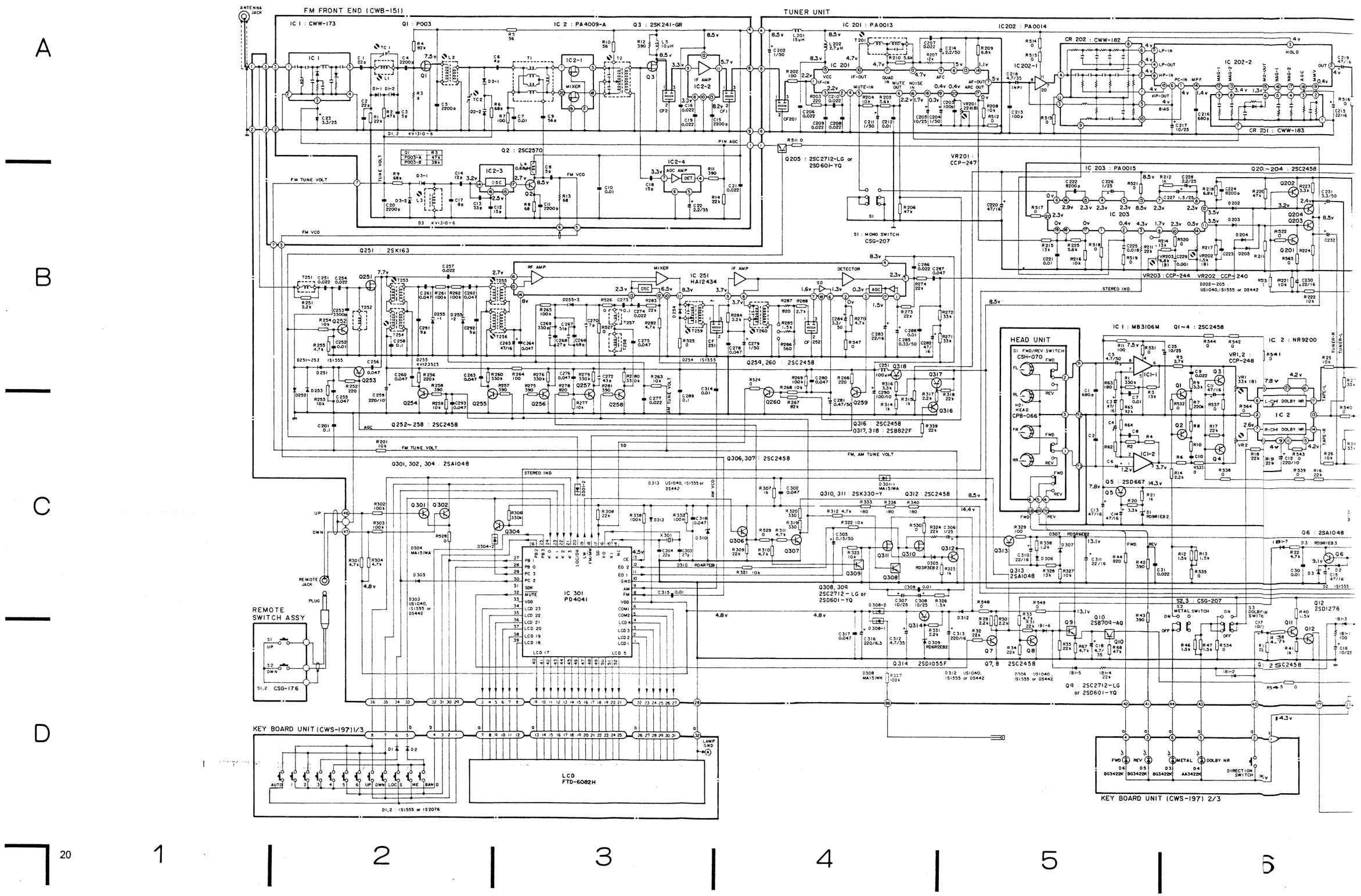

SWITCHES

- **SWITCH UNIT**

S101: 2SP/4SP SELECTOR SWITCH.....2SP-4SP

- **SWITCH P.C. BOARD**

S1: TAPE/TUNER SWITCH .....TAPE-TUNER
S2: KEY OFF SWITCH.....ON-OFF

- **VOLUME UNIT**

S1: RADIO SWITCH .....ON-OFF

- **HEAD UNIT**

S1: FWD/REV SWITCH .....FWD-REV

- **TUNER UNIT**

S1: MONO SWITCH.....MONO-AUTO
S2: METAL SWITCH .....ON-OFF
S3: DOLBY NR SWITCH.....ON-OFF

- **MISCELLANEOUS**

S1: FF/REW SWITCH .....ON-OFF

The underlined indicates the switch position.

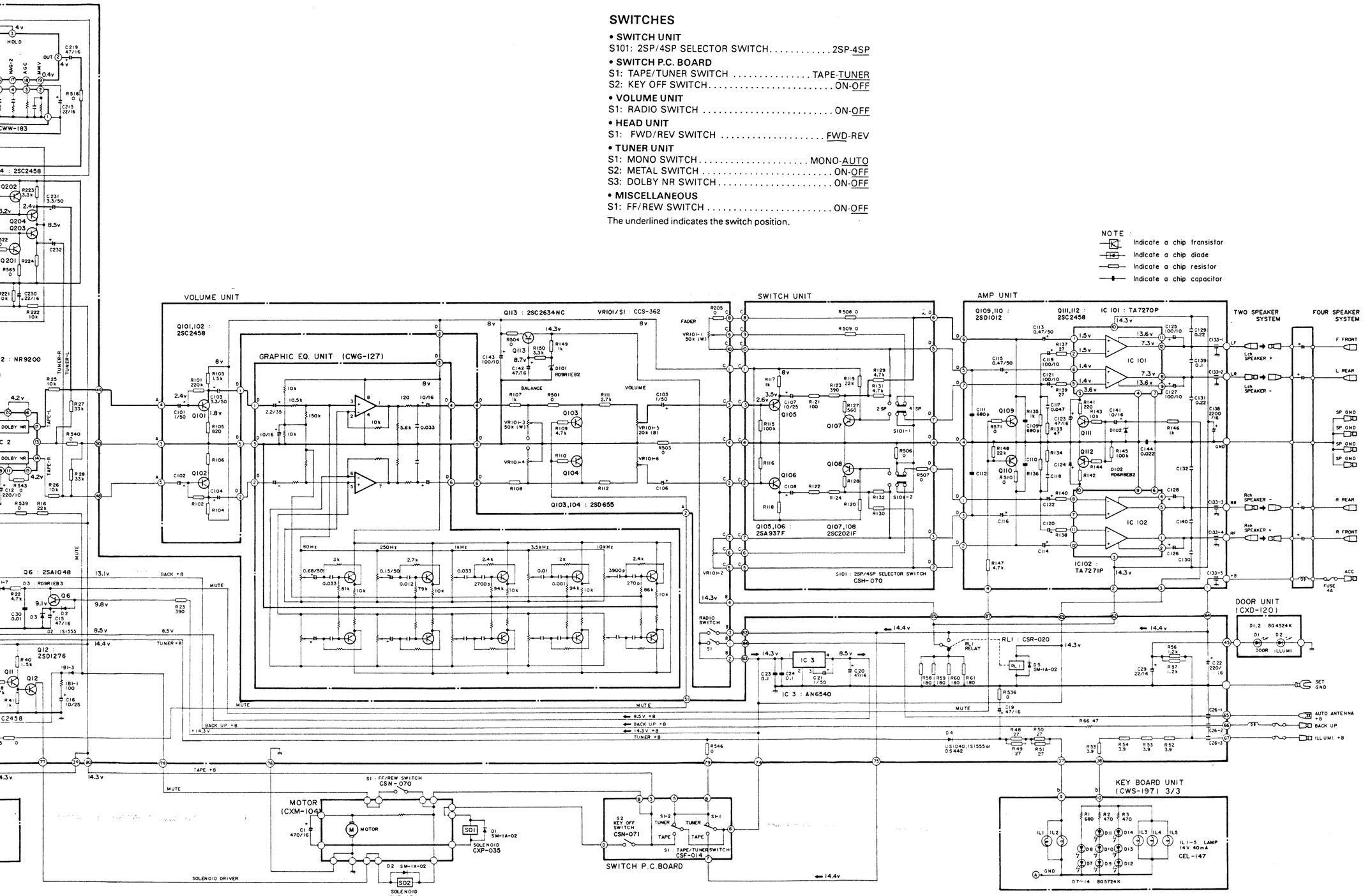

Fig. 14

7. CONNECTION DIAGRAM(KEH-9300)

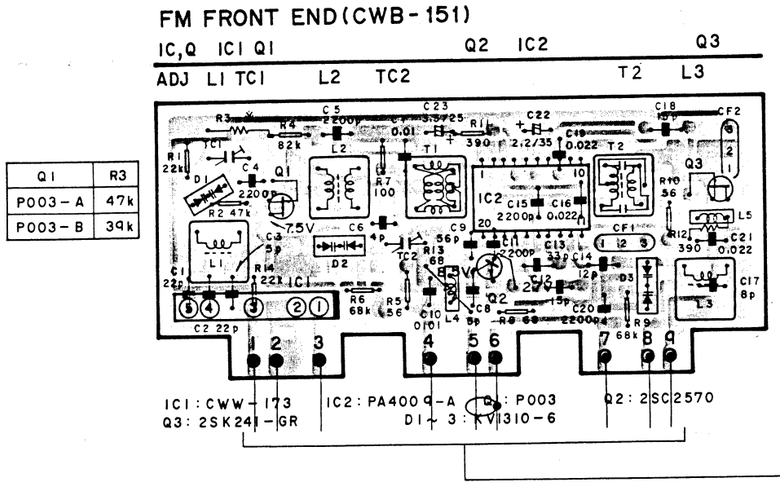

Q1	R3
P003-A	47k
P003-B	39k

FM FRONT END(CWB-151)

	1	2	3	4	5	6	7	8	9	10
IC2		0				0	3.3	3.3	3.3	0
	11	12	13	14	15	16	17	18	19	20
IC2	5.7	8.5	8.2	8.2	0	2.5	2.7		0	

(V)

TUNER UNIT

	1	2	3	4	5	6	7	8	9	10	11	12	13	14	15	16	17	18	19	20
IC201	2.2		2.2	0		2.2	5.0	5.0	5.0	4.7	4.7	4.7	0	1.1	8.3	1.7	0	0.3	0.4	0.4
IC202	4.0	4.0	4.0	4.0	4.0	4.0			4.0	4.0			3.4	1.4	1.3	0	0	0	0.4	0
IC203		0.4	4.3	2.3	2.3	0	2.3	2.3	1.7	2.3	3.5	3.5	8.5	0.5	2.3	2.9	0	0	0	2.3
IC251		0	0.3	8.3	2.3	1.3	1.6	3.7	3.7		8.3	6.5	2.3	8.0		2.7	1.5	0		
IC2							2.6		4.0						4.2	4.2		7.8		4.2

(V)

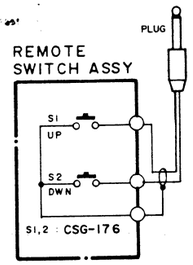

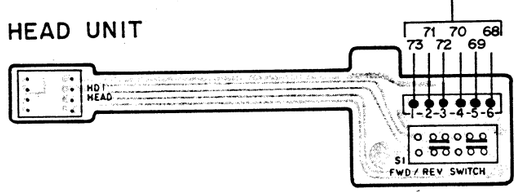

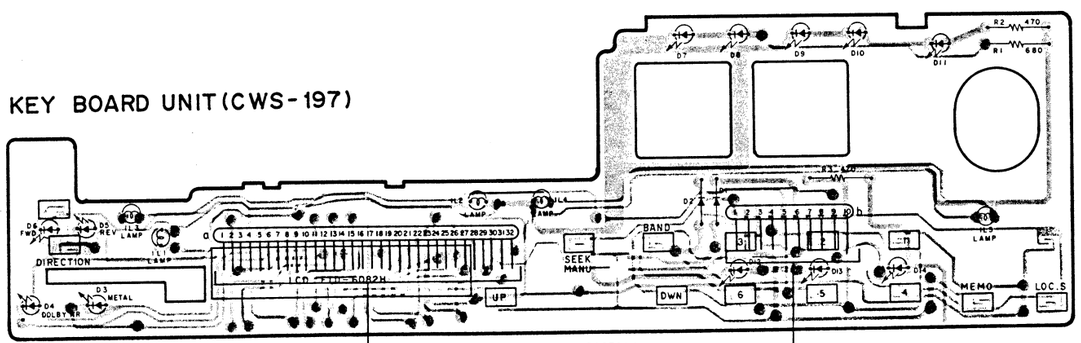

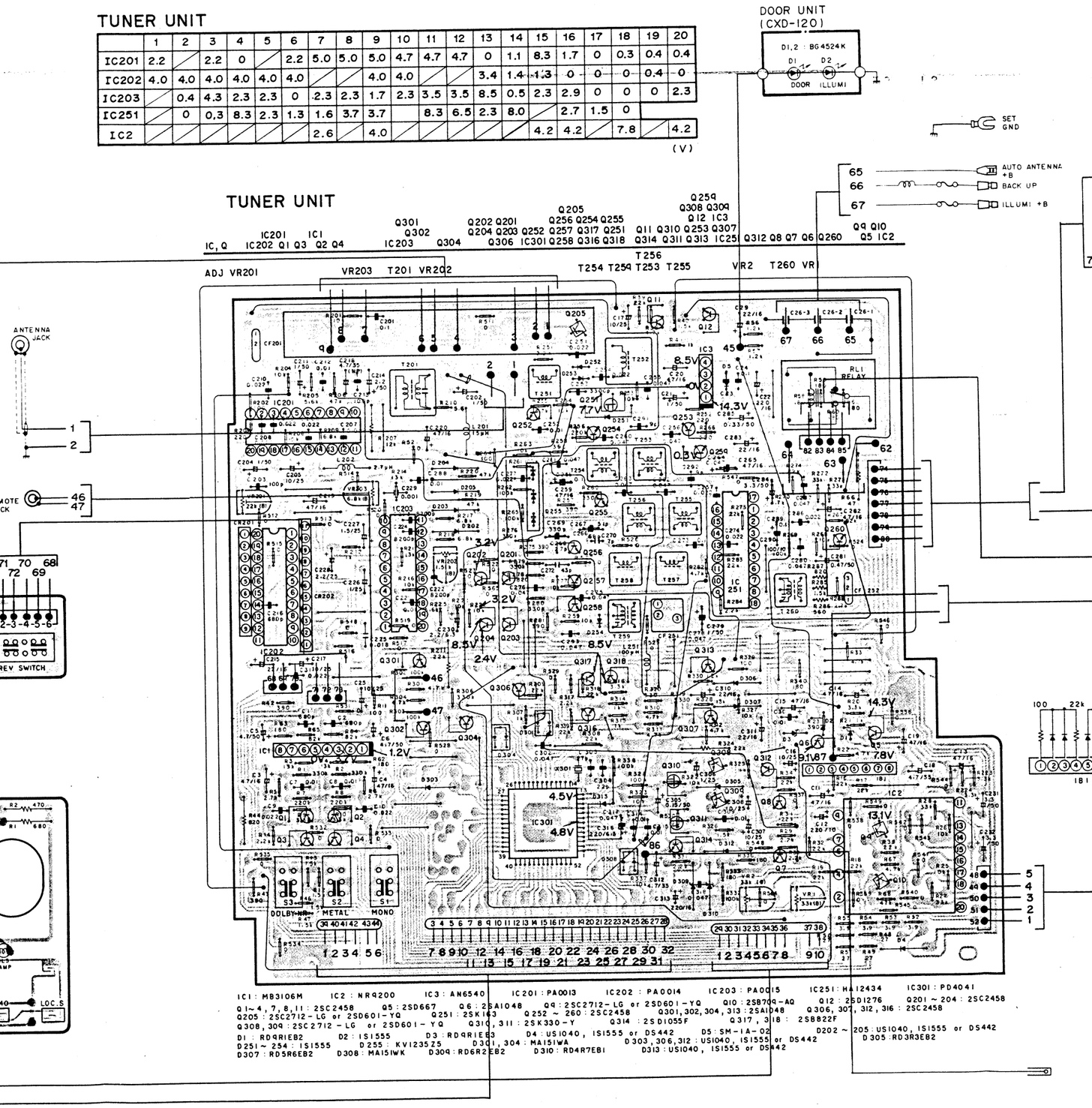

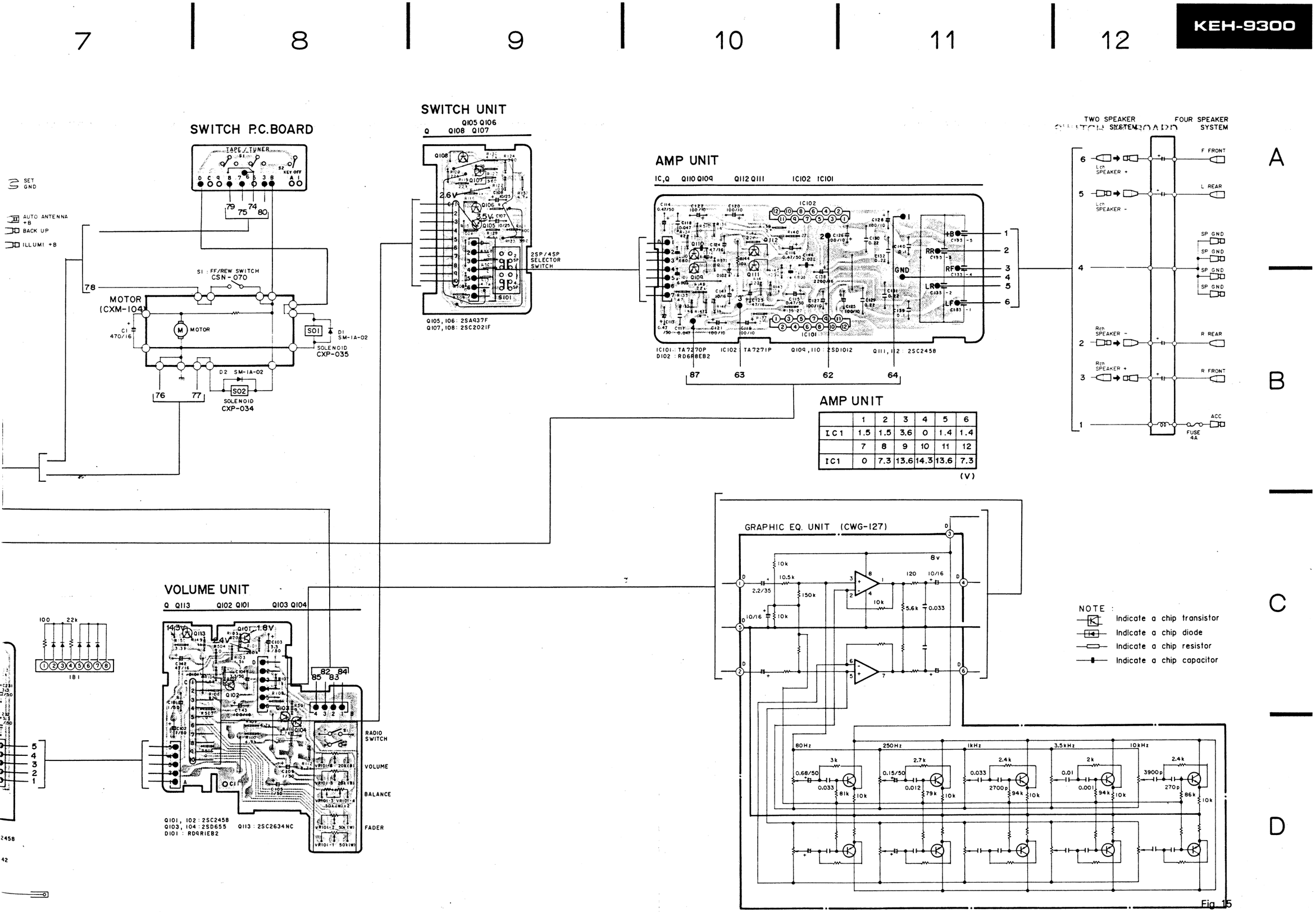
SWITCH P.C.BOARD
SWITCH UNIT
AMP UNIT
VOLUME UNIT
GRAPHIC EQ. UNIT (CWG-127)
TWO SPEAKER SYSTEM
FOUR SPEAKER SYSTEM
MOTOR (CXM-104)
SOLENOID CXP-035
SOLENOID CXP-034
S1 : FF/REW SWITCH CSN-070
2SP/4SP SELECTOR SWITCH
RADIO SWITCH
VOLUME
BALANCE
FADER
F FRONT
L REAR
R REAR
R FRONT
ACC
FUSE 4A
NOTE :
Indicate a chip transistor
Indicate a chip diode
Indicate a chip resistor
Indicate a chip capacitor

Fig. 15

8. SCHEMATIC CIRCUIT DIAGRAM (KEH-9000)

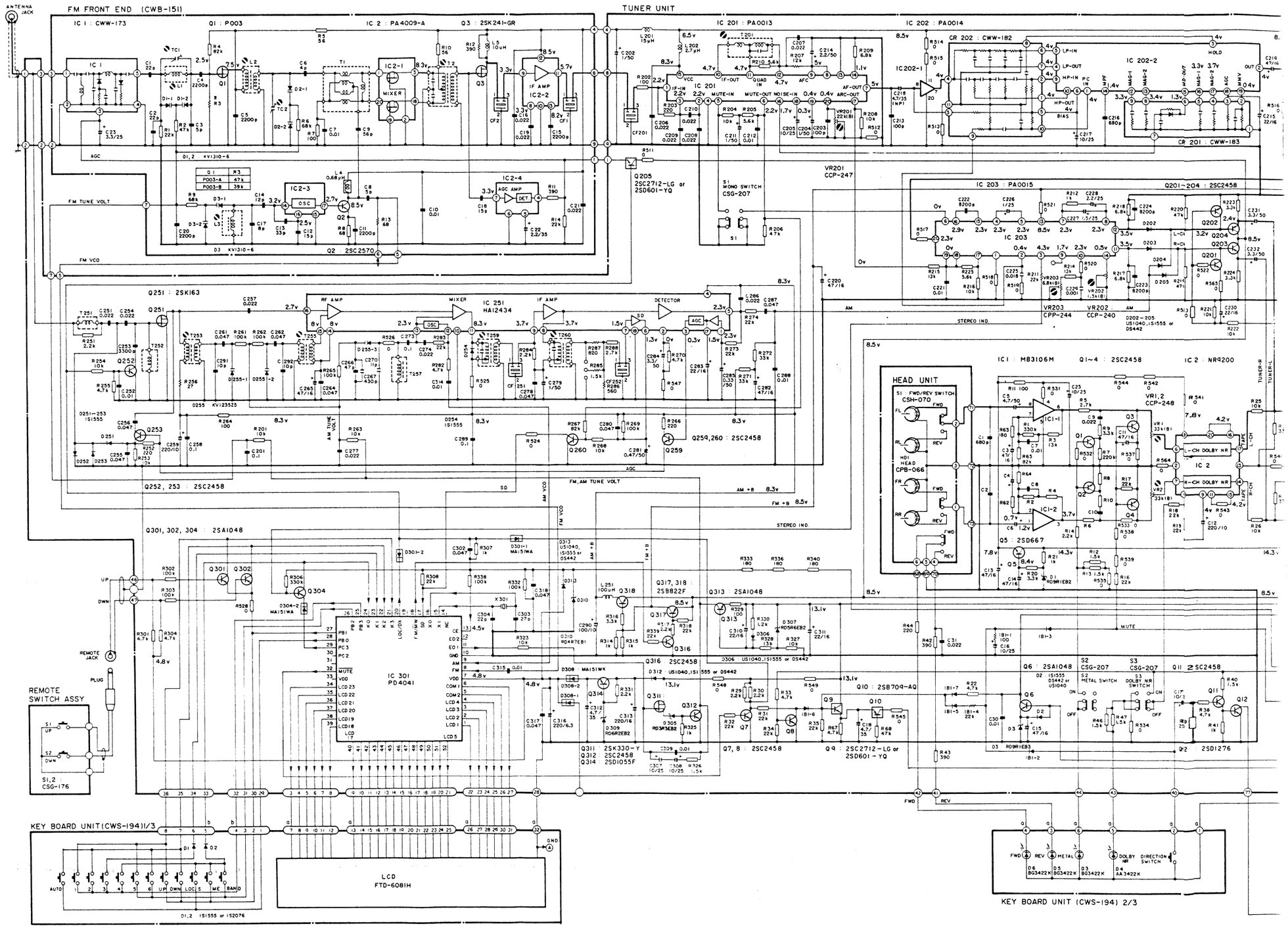

SWITCHES

- **SWITCH UNIT**
  S101: 2SP/4SP SELECTOR SWITCH 2SP-4SP
- **SWITCH P.C. BOARD**
  S1: TAPE/TUNER SWITCH ..... TAPE-TUNER
  S2: KEY OFF SWITCH ..... ON-OFF
- **VOLUME UNIT**
  S1: RADIO SWITCH ..... ON-OFF
- **HEAD UNIT**
  S1: FWD/REV SWITCH ..... FWD-REV
- **TUNER UNIT**
  S1: MONO SWITCH ..... MONO-AUTO
  S2: METAL SWITCH ..... ON-OFF
  S3: DOLBY NR SWITCH ..... ON-OFF
- **MISCELLANEOUS**
  S1: FF/REW SWITCH ..... ON-OFF

The underlined indicates the switch position.

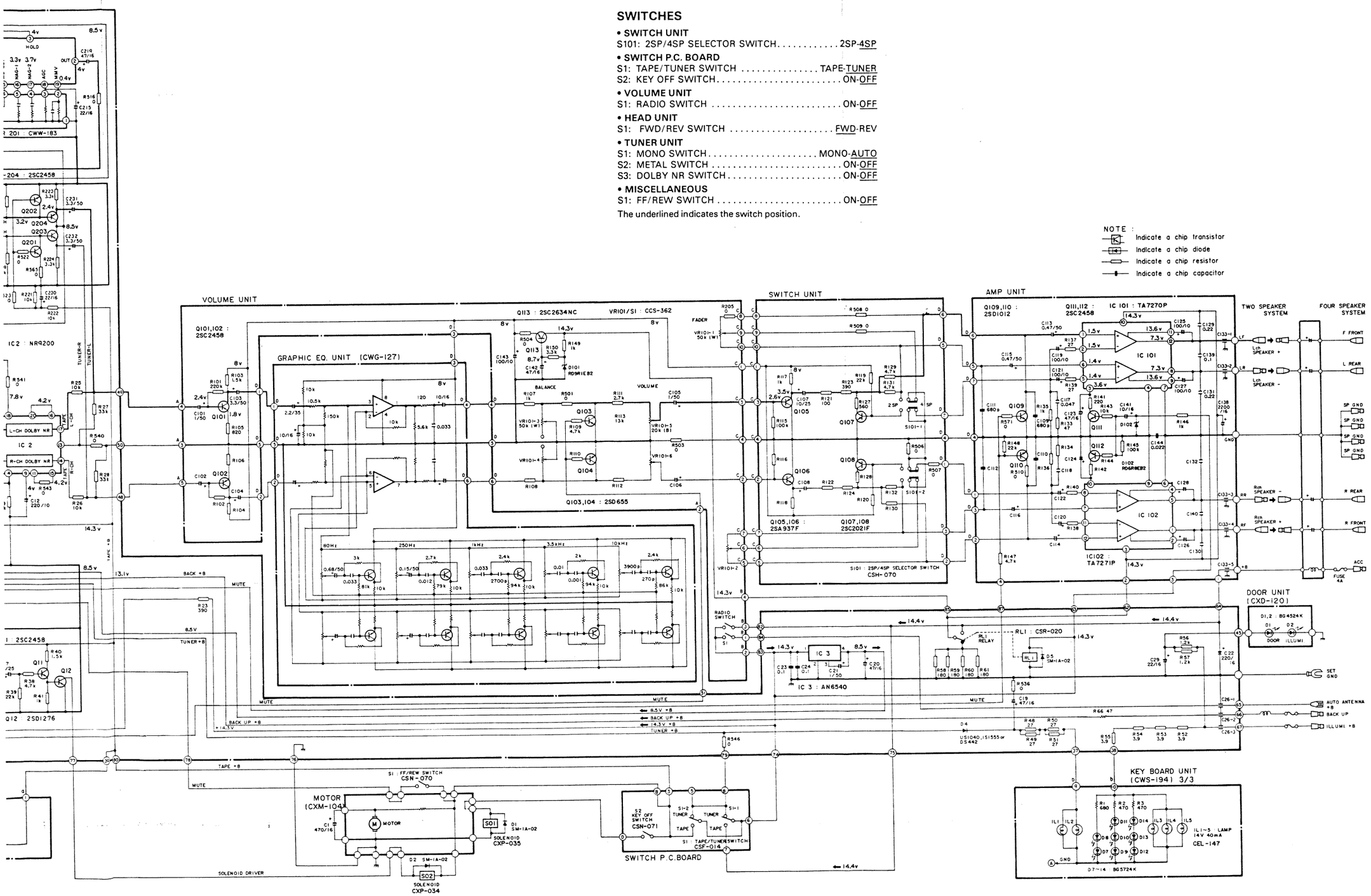

Fig.16

9. CONNECTION DIAGRAM (KEH-9000)

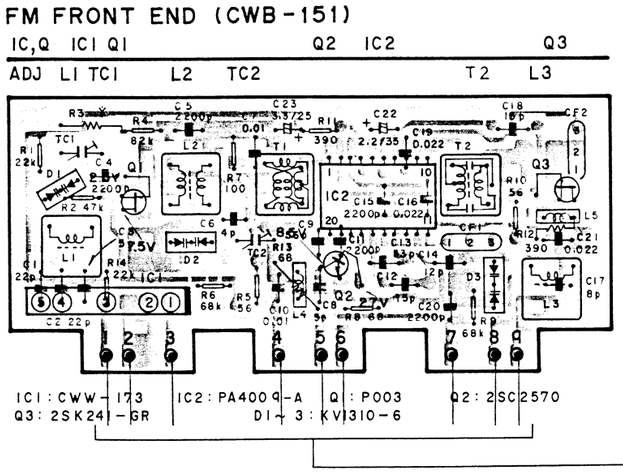

Q1	R3
P003-A	47k
P003-B	39k

FM FRONT END (CWB-151)

	1	2	3	4	5	6	7	8	9	10
IC2	/	0	8.3	/	/	0	3.3	3.3	3.3	0
	11	12	13	14	15	16	17	18	19	20
IC2	5.7	8.5	8.2	3.2	0	2.5	2.7	/	0	/

(V)

TUNER UNIT

	1	2	3	4	5	6	7	8	9	10	11	12	13	14	15	16	17	18	19	20
IC201	2.2	2.2	2.2	0	/	2.2	5.0	5.0	5.0	4.7	4.7	4.7	0	1.1	8.3	1.7	0	0.3	0.4	0.4
IC202	4.0	4.0	4.0	4.0	4.0	4.0	4.0	/	4.0	4.0	/	3.3	3.4	1.4	1.3	3.3	3.7	0	0.4	0
IC203	/	0.4	4.3	2.3	2.3	0	2.3	2.3	1.7	2.3	3.5	3.5	8.5	0.5	2.3	2.9	/	0	0	2.3
IC251	2.3	0	0.3	8.3	2.3	1.3	1.5	3.7	3.7	0	8.3	/	2.3	8.0	8.0	2.7	1.5	0		
IC 2	/	/	/	/	/	/	/	/	4.0	/	/	/	/	/	4.2	4.2	/	7.8	/	4.2

(V)

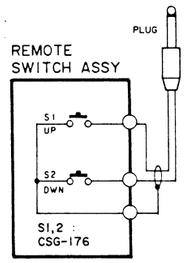

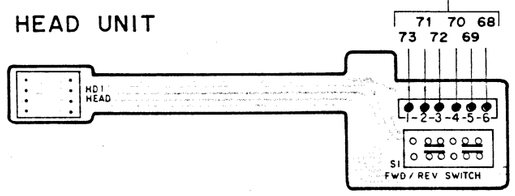

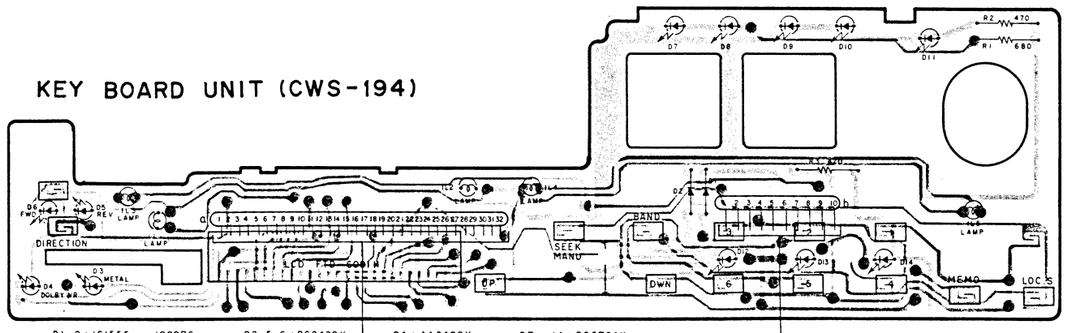

D1, 2 : 1S1555 or 1S2076 D3, 5, 6 : BG3422K D4 : AA3422K D7 ~ 14 : BG5724K

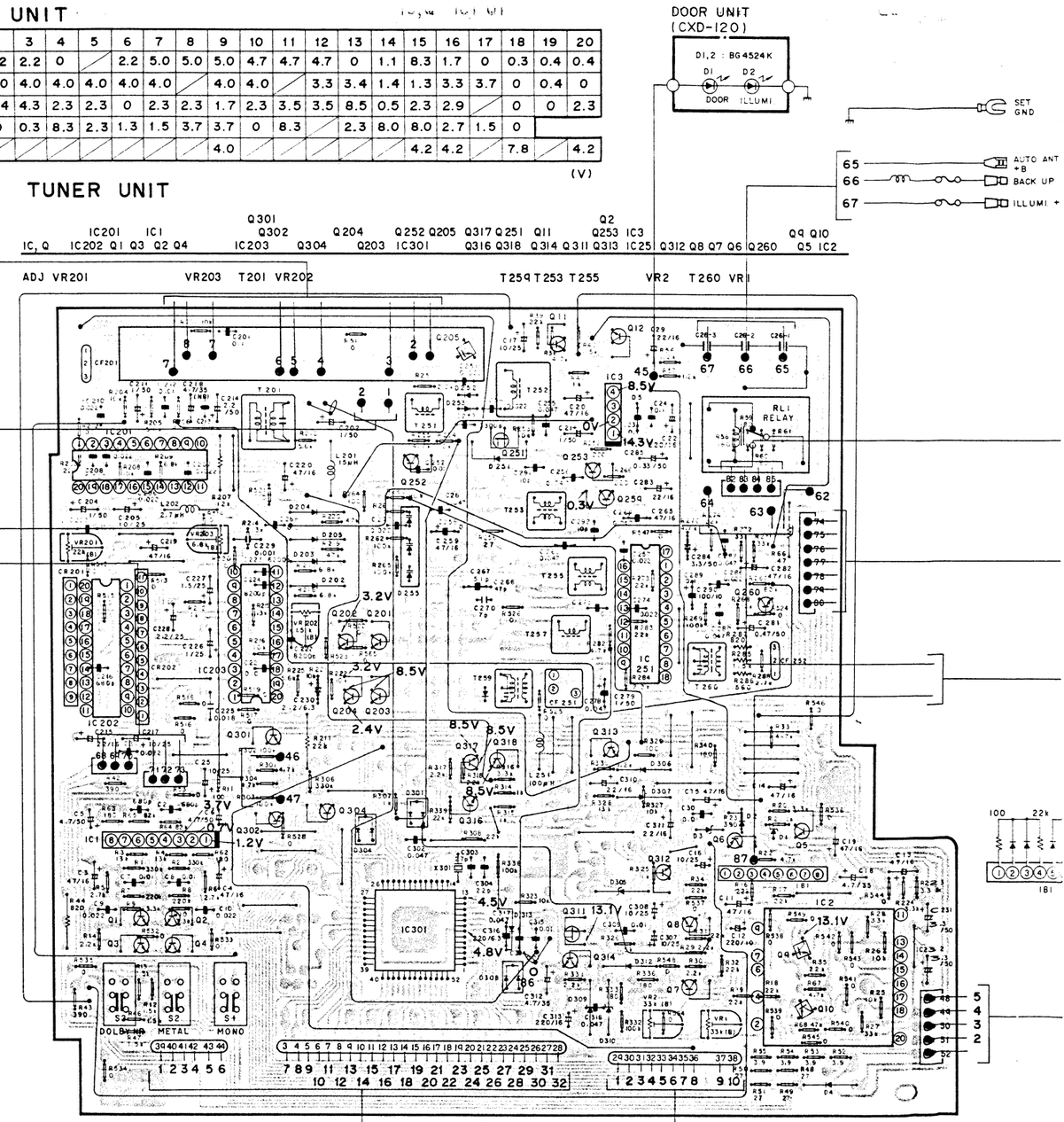

IC1 : MB3106M IC2 : NR9200 IC3 : AN6540 IC201 : PA0013 IC202 : PA0014 IC203 : PA0015 IC251 : HA12434 IC301 : PD4041

Q1~4, 7, 8, 11 : 2SC2458 Q5 : 2SD667 Q6 : 2SA1048 Q9 : 2SC2712-LG or 2SD601-YQ Q10 : 2SB709-AQ Q12 : 2SD1276 Q201 ~ 204 : 2SC2458
Q205 : 2SC2712-LG or 2SD601-YQ Q251 : 2SK163 Q252, 253, 259, 260 : 2SC2458 Q301, 302, 304, 313 : 2SA1048 Q312, 316 : 2SC2458
Q311 : 2SK330-Y Q314 : 2SD1055F Q317, 318 : 2SB822F

D1 : RD9R1EB2 D3 : RD9R1EB3 D2, 4 : US1040, 1S1555 or DS442 D5 : SM-1A-02 D202 ~ 205 : US1040, 1S1555 or DS442
D251 ~ 254 : 1S1555 D255 : KV1235Z5 D301, 304 : MA151WA D306, 312, 313 : US1040, 1S1555 or DS442 D305 : RD3R3EB2
D307 : RD5R6EB2 D308 : MA151WK D309 : RD6R2EB2 D310 : RD4R7EB1

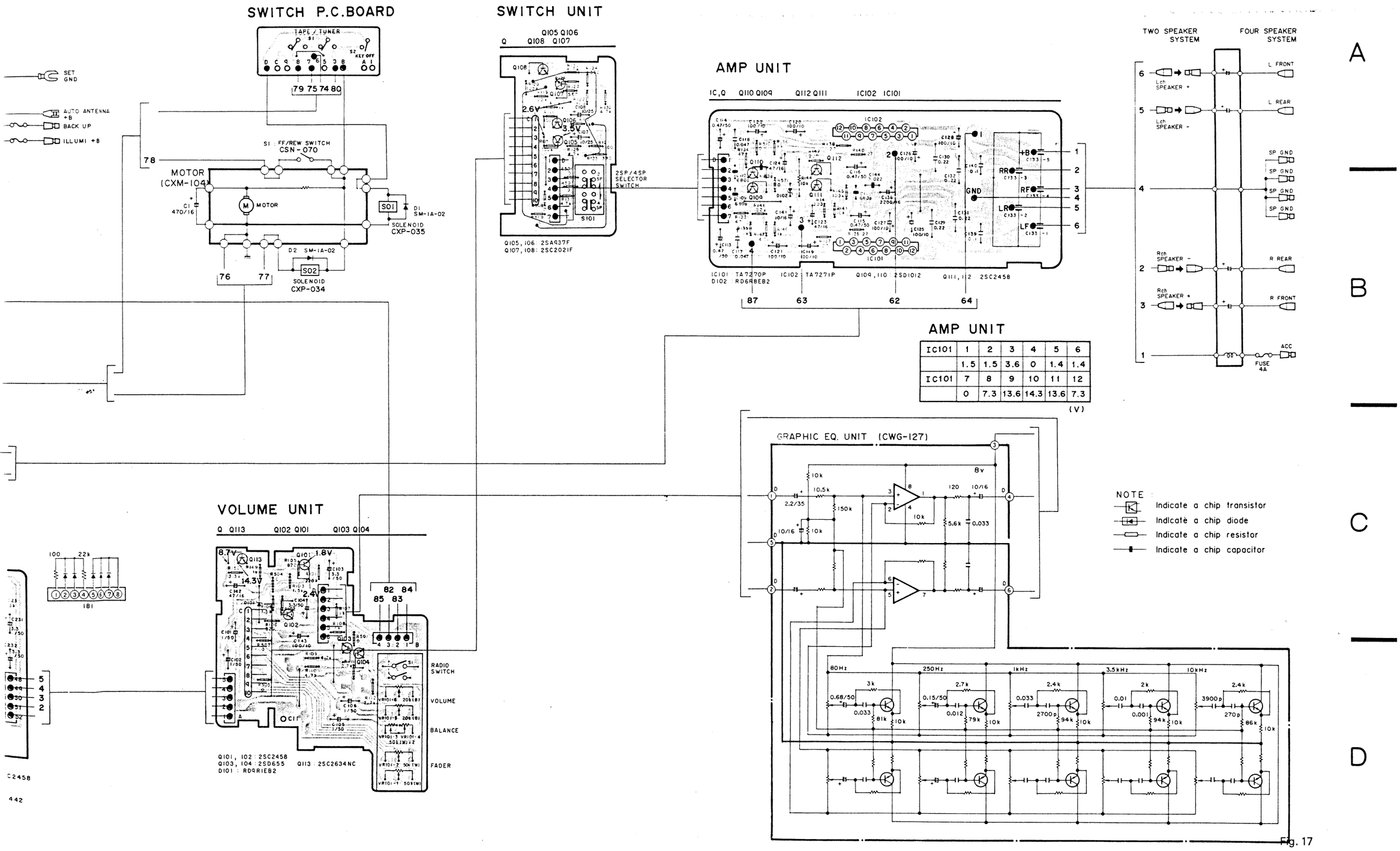
SWITCH P.C.BOARD
SET GND
AUTO ANTENNA +B
BACK UP
ILLUMI +B
TAPE / TUNER
S1
S2
KEY OFF
79 75 74 80
78
S1 : FF/REW SWITCH CSN-070
MOTOR (CXM-104)
MOTOR
C1 470/16
SO1
D1 SM-1A-02
SOLENOID CXP-035
D2 SM-1A-02
SO2
SOLENOID CXP-034
76
77
SWITCH UNIT
Q105 Q106
Q108 Q107
2.6V
3.5V
2SP/4SP SELECTOR SWITCH
S101
Q105, 106 : 2SA937F
Q107, 108 : 2SC2021F
AMP UNIT
IC,Q Q110 Q109 Q112 Q111 IC102 IC101
IC102
IC101
+B
RR
RF
GND
LR
LF
IC101 TA7270P
D102 RD6RBEB2
IC102 TA7271P
Q109, 110 : 2SD1012
Q111, 112 2SC2458
87
63
62
64
TWO SPEAKER SYSTEM
FOUR SPEAKER SYSTEM
Lch SPEAKER +
Lch SPEAKER -
Rch SPEAKER -
Rch SPEAKER +
L FRONT
L REAR
SP GND
R REAR
R FRONT
ACC
FUSE 4A
AMP UNIT
(V)
VOLUME UNIT
Q Q113 Q102 Q101 Q103 Q104
8.7V
1.8V
14.3V
2.4V
82 84
85 83
RADIO SWITCH
VOLUME
BALANCE
FADER
Q101, 102 : 2SC2458
Q103, 104 : 2SD655
D101 : RD9RIEB2
Q113 : 2SC2634NC
GRAPHIC EQ. UNIT (CWG-127)
8V
80Hz
250Hz
1kHz
3.5kHz
10kHz
NOTE
Indicate a chip transistor
Indicate a chip diode
Indicate a chip resistor
Indicate a chip capacitor

Fig. 17

10. ELECTRICAL PARTS LIST

NOTE:

When ordering resistors, first convert resistance values into code form as shown in the following examples.

Ex. 1 When there are 2 effective digits (any digit apart from 0), such as 560 ohm and 47k ohm (tolerance is shown by J = 5%, and K = 10%).

560Ω	*56 × 10¹*	*561*	*RD1/4PS 5 6 1 J*
47kΩ	*47 × 10³*	*473*	*RD1/4PS 4 7 3 J*
0.5Ω	*0R5*		*RN2H 0 R 5 K*
1Ω	*010*		*RS1P 0 1 0 K*

Ex. 2 When there are 3 effective digits (such as in high precision metal film resistors).

5.62kΩ 562 × 10¹ RN1/4SR 5 6 2 1 F

- *For your Parts Stock Control, the fast moving items are indicated with the marks ★★ and ★.*
  ★★: GENERALLY MOVES FASTER THAN ★.
  This classification shall be adjusted by each distributor because it depends on model number, temperature, humidity, etc.
- *Parts whose parts numbers are omitted are subject to being not supplied.*

FM Front End (CWB-151)

MISCELLANEOUS

Mark	Symbol & Description		Part No.
★★	IC1		CWW-173
★★	IC2		PA4009
★★	*Q1		P003
★★	Q2		2SC2570
★★	Q3		2SK241-GR
★	D1 – D3		KV1310-6
	L1	Coil	CTC-189
	L2	Coil	CTC-190
	L3	Coil	CTC-191
	L4	Chip Inductor	CTF-185
	L5	Chip Inductor	CTF-186
	T1	Transformer	CTC-186
	T2	IF Transformer	CTC-187
	TC1, TC2	Trimmer	CCG-098
	CF1, CF2	Ceramic Filter	CTF-182

RESISTORS

Mark	Symbol & Description	Part No.
	R1, R2, R4 – R11, R14 Chip Resistor	RS1/8S□□□J
	*R3, R12, R13	RD1/6PS□□□J

Caution:
Transistor *Q1 and resistor * R3 used mutually in the following assembly.

Q1	R3
P003-A	RD1/6PS473J
P003-B	RD1/6PS393J

CAPACITORS

Mark	Symbol & Description		Part No.
	C1, C2	Chip Capacitor	CCSSH220J50
	C3, C8	Chip Capacitor	CCSCH050C50
	C4, C5, C11, C15, C20	Chip Capacitor	CKSYB222K50
	C6	Chip Capacitor	CCSCH040C50
	C7, C10	Chip Capacitor	CKSYB103K50
	C9	Chip Capacitor	CCSSH560J50
	C12, C18	Chip Capacitor	CCSTH150J50
	C13	Chip Capacitor	CCSTH330J50
	C14	Chip Capacitor	CCSTH120J50
	C16, C19, C21	Chip Capacitor	CKSYF223Z50
	C17	Chip Capacitor	CCSUJ080D50
	C22		CEA2R2M35LS
	C23		CEA3R3M25LS

Volume Unit

MISCELLANEOUS

Mark	Symbol & Description		Part No.
★★	Q101, Q102		2SC2458
★★	Q103, Q104		2SD655
★★	Q113		2SC2634NC
★	D101		RD9R1EB2
★★	VR 101/S1	Volume/Switch Volume, 50 kΩ(W) × 2, 20 kΩ(B) (Fader, Balance, Volume/Radio Switch)	CCS-362

RESISTORS (KEH-9300SDK)

Mark	Symbol & Description		Part No.
	R101 – R114, R149, R150	Chip Resistor	RS1/8S□□□J
	R501 – R505	Chip Resistor 0Ω	RS1/8S0R0J

RESISTORS (KEH-9300, 9000)

Mark	Symbol & Description		Part No.
	R101 – R122, R149, R150	Chip Resistor	RS1/8S□□□J
	R501, R503 – R504	Chip Resistor 0Ω	RS1/8S0R0J

CAPACITORS

Mark	Symbol & Description	Part No.
	C101, C102, C105, C106	CEA010M50LS
	C103, C104	CEA3R3M50LS
	C142	CEA470M16LS
	C143	CEA101M10L2

Switch Unit

MISCELLANEOUS

Mark	Symbol & Description		Part No.
★★	Q105, Q106		2SA937F
★★	Q107, Q108		2SC2021F
★★	S101	Switch (2SP/4SP Selector)	CSH-070

RESISTORS (KEH-9300SDK)

Mark	Symbol & Description		Part No.
	R115 – R132	Chip Resistor	RS1/8S□□□J
	R506 – R509	Chip Resistor 0Ω	RS1/8S0R0J

RESISTORS (KEH-9300, 9000)

Mark	Symbol & Description		Part No.
	R115 – R124, R127 – R132	Chip Resistor	RS1/8S□□□J
	R506 – R509	Chip Resistor 0Ω	RS1/8S0R0J

CAPACITORS

Mark	Symbol & Description	Part No.
	C107, C108	CEA100M25LS

Amp Unit

MISCELLANEOUS

Mark	Symbol & Description	Part No.
★★	IC101	TA7270P
★★	IC102	TA7271P
★★	Q109, Q110	2SD1012
★★	Q111, Q112	2SC2458
★	D102	RD6R8EB2

RESISTORS

Mark	Symbol & Description		Part No.
	R133 – R143, R145 – R148	Chip Resistor	RS1/8S□□□J
	R144		RD1/4PM□□□J
	R510, R571	Chip Resistor 0Ω	RS1/8S0R0J

CAPACITORS

Mark	Symbol & Description		Part No.
	C109 – C112	Chip Capacitor	CKSYB681K50
	C113 – C116		CEAR47M50LS2
	C117, C118		CQMA473J50L
	C119 – C122, C125 – C128		CEA101M10L2
	C123, C124		CEA470M16L2
	C129 – C132		CQMA224K50L
	C133	Feed through Capacitor	CCL-123
	C138		CEA222M16L2
	C139, C140		CQMA104K50L
	C141		CEA100M16L2
	C144	Chip Capacitor	CKSYB223K25

Door Unit (CXD-120)

Mark	Symbol & Description		Part No.
★	D1, D2	LED	BG1524K

Remote Switch Assy

Mark	Symbol & Description		Part No.
★★	S1, S2	Switch	CS3-176

Key Board Unit (CWS-192) (KEH-9300SDK)
Key Board Unit (CWS-197) (KEH-9300)
Key Board Unit (CWS-194) (KEH-9000)

Mark	Symbol & Description		Part No.
★	LCD (KEH-9300SDK, 9300)		FTI-6082H
★	LCD (KEH-9000)		FTI-6081H
★	D1, D2		1S5555 or 1S0776
★	D3, D5, D6	LED	BG4224K
★	D4	LED	AA4224K
★	D7 – D14	LED	BG7224K
★★	IL1 – IL5	Lamp 14V 40mA	CE-147
	R1 – R3		RD/4PM□□□J

Head Unit

Mark	Symbol & Description		Part No.
★★	HD1	Head	CPI-0066
★★	S1	Switch (FWD/REV)	CS-0070

No.

8S□□□J

4PM□□□J
8S0R0J

No.

YB681K50
R47M50LS2
MA473J50L
101M10L2
470M16L2

MA224K50L
-123
A222M16L2
MA104K50L
A100M16L2

SYB223K25

t No.

4524K

t No.

G-176

00SDK)
00)
00)

rt No.

D-6082H
D-6081H
1555 or
2076
G3422K

A3422K
G5724K
EL-147
D1/4PM□□□J

rt No.

PB-066
SH-070

Switch P.C. Board

Mark	Symbol & Description		Part No.
★★	S1	Switch (Tape/Tuner)	CSF-014
★★	S2	Switch (Key Off)	CSN-071

SDK Unit (KEH-9300SDK)

Mark	Symbol & Description		Part No.
★★	IC401		S0280
★★	IC402		TA75558P
★★	IC403		S551
★★	Q401 — Q404, Q408 — Q410		2SC2458
★★	Q405		2SK30A-O
★★	Q406		2SA1048-GR
★★	Q407		2SA1048
★★	Q411 — Q413	Chip Transistor	2SC2712-LG or 2SC2712-LL or 2SC2712-LY or
★	D401 — D405, D410		2SD601-YQ or 2SD601-YR or 2SD601-YS 1S1555 or US2076 or
★	D406 — D408		1S2473 US1040 or 1S1555 or DS442
★	D409	Chip Diode	MA151WA
	L401, L402	Coil	CTF-125
	CF401	Ceramic Resonator	CTF-109
★★	VR401	Semi-fixed, 4.7kΩ (B)	CCP-243

RESISTORS

Mark	Symbol & Description		Part No.
	R401 — R437, R439 — R444	Chip Resistor	RS1/8S□□□J
	R551 — R563, R570, R572	Chip Resistor 0Ω	RS1/8S0R0J

CAPACITORS

Mark	Symbol & Description		Part No.
	C401, C415, C425	Chip Capacitor	CKSYB223K25
	C402, C403, C406	Chip Capacitor	CCSSL391J50
	C404	Chip Capacitor	CKSYB681K50
	C405, C417		CEA220M16LS
	C407		CEA101M16L2
	C408, C414	Chip Capacitor	CKSYB103K50
	C409, C412		CQSA102J50
	C410, C413		CCDLH680J50L
	C411		CCDLH120J50L
	C416		CQSA151J50
	C418		CEAR33M50LS2
	C419		CEA0R1M50LS2
	C420	Chip Capacitor	CKSYF104Z25
	C421		CQMA103J50L
	C422		CQMA333J50L
	C423		CEA100M25LS
	C424, C427		CEA010M59LS2
	C426		CEA100M16L2

Tuner Unit (KEH-9300SDK, 9300)

MISCELLANEOUS

Mark	Symbol & Description		Part No.
★★	IC1		MB3106M
★★	IC2		NR9200
★★	IC3		AN6540
★★	IC201		PA0013
★★	IC202		PA0014
★★	IC203		PA0015
★★	IC251		HA12434-A or HA12434-B
★★	IC301		PD4041
★★	Q1 — Q4, Q7, Q8, Q11		2SC2458
★★	Q5		2SD667
★★	Q6, Q301, Q302, Q304, Q313		2SA1048
★★	Q9, Q205, Q308, Q309	Chip Transistor	2SC2712-LG or 2SC2712-LL or 2SC2712-LY or
★★	Q10	Chip Transistor	2SD601-YQ or 2SD601-YR or 2SD601-YS 2SB709-AQ or 2SB709-AR or
★★	Q12		2SB709-AS
★★	Q201 — Q204, Q252 — Q260, Q306, Q307, Q312, Q316		2SD1276 2SC2458
★★	Q251		2SK163
★★	Q303 (KEH-9300SDK)		2SA1048
★★	Q305 (KEH-9300SDK), Q315 (KEH-9300SDK)		2SC2458
★★	Q310, Q311		2SK330-Y
★★	Q314		2SD1055F
★★	Q317, Q318		2SB822F
★	D1		RD9R1EB2
★	D2, D4, D202 — D205		1S1555 or US1040 or DS442
★	D3		RD9R1EB3
★	D5		SM-1A-02
★	D251 — D254		1S1555
★	D255		KV1235Z5-A or KV1235Z5-B or KV1235Z5-C or KV1235Z5-D or KV1235Z5-E or KV1235Z5-F
★	D301, D304, D311 (KEH-9300 SDK)	Chip Diode	MA151WA
★	D302 (KEH-9300SDK), D303, D306, D312, D313		US1040 or 1S1555 or DS442
★	D305		RD3R3EB2
★	D307		RD5R6EB2
★	D308	Chip Diode	MA151WK
★	D309		RD6R2EB2
★	D310		RD4R7EB1
	L201	Ferri-Inductor, 15μH	CTF-156
	L202	Ferri-Inductor, 2.7μH	CTF-155
	L251	Ferri-Inductor, 100μH	CTF-157
	T201	Coil	CTC-177
	T251	Coil	CTB-149
	T252	Coil	CTB-161
	T253, 255	Coil	CTB-150
	T254, 256	Coil	CTB-151
	T257	Coil	CTB-164
	T258	Coil	CTB-165
	T259	AM Coil	CTE-139
	T260	AM Coil	CTE-140
	IB1		CWW-206
	RL1	Relay	CSR-020
	CR201		CWW-183
	CR202		CWW-182
	CF201	Ceramic Filter	CTF-182
	CF251	Filter	CTF-100
	CF252	Filter	CTF-165
★★	S1 — S3	Switch	CSG-207
★★	VR1, VR2	Semi-fixed, 33kΩ(B)	CCP-248
★★	VR201	Semi-fixed, 22kΩ(B)	CCP-247
★★	VR202	Semi-fixed, 1.5kΩ(B)	CCP-240
★★	VR203	Semi-fixed, 6.8kΩ(B)	CCP-244
	X301	Crystal Resonator	CSS-022

RESISTORS (KEH-9300SDK)

Mark	Symbol & Description		Part No.
	R1 — R14, R16 — R23, R25 — R35, R38 — R43, R46 — R65, R67, R68, R201 — R206, R208 — R210, R212, R214 — R225, R251 — R284, R288, R301 — R323, R325 — R336, R338 — R341	Chip Resistor	RS1/8S□□□J
	R44, R66, R207, R211, R324 R285 — R287 R511 — R545, R547 — R549, R564 — R566	Chip Resistor 0Ω	RD1/4PM□□□J RD1/6VS□□□J RS1/8S0R0J

RESISTORS (KEH-9300)

Mark	Symbol & Description		Part No.
	R1 — R14, R16 — R23, R25 — R35, R38 — R43, R46 — R65, R67, R68, R201 — R206, R208 — R210, R212, R214 — R225, R251 — R284, R288, R301 — R304, R306 — R312, R314 — R323 R325 — R333, R336 — R340	Chip Resistor	RS1/8S□□□J
	R44, R66, R207, R211, R324 R285 — R287 R511 — R549, R564, R565	Chip Resistor	RD1/4PM□□□J RD1/6VS□□□J RS1/8S0R0J

CAPACITORS

Mark	Symbol & Description		Part No.
	C1, C2	Chip Capacitor	CKSYB681K50
	C3, C4, C11, C13 — C15, C19, C20		CEA470M16LS
	C5, C6		CEANL4R7M50LL
	C7, C8, C30	Chip Capacitor	CKSYB103K50
	C9, C10, C31	Chip Capacitor	CKSYB223K25
	C12		CEA221M10L2
	C16, C17, C25		CEA100M25LS
	C18		CEA4R7M35LS
	C21		CEA010M50LS2
	C22		CEA221M16L2
	C23, C24	Chip Capacitor	CKSYF104Z25
	C26	Feed through Capacitor	CCL-124
	C29		CEA220M16LS
	C201	Chip Capacitor	CKSYF104Z25
	C202, C204, C211		CEA010M50LS2
	C203, C213	Chip Capacitor	CCSSL101K50
	C205, C217		CEA100M25LS
	C206 — C210	Chip Capacitor	CKSYB223K25
	C212, C221	Chip Capacitor	CKSYB103K50
	C214		CEA2R2M50LS2
	C215, C230		CEA220M16LS
	C216	Chip Capacitor	CKSYB681K50
	C218		CEA4R7M35NPLL
	C219, C220		CEA470M16LS
	C222 — C224	Chip Capacitor	CKSYB822K50
	C225		CQMA183J50L
	C226		CSZA010M25
	C227		CSZA1R5M25
	C228		CSZA2R2M25
	C229		CQSA102J50
	C231, C232		CEA3R3M50LS
	C251, C254, C257, C274, C277, C286	Chip Capacitor	CKSYB223K25
	C252, C288	Chip Capacitor	CKSYB103K50
	C253	Chip Capacitor	CKSYB332K50
	C255, C256, C260 — C264, C275, C276	Chip Capacitor	CKSYF473Z50
	C258, C273, C289	Chip Capacitor	CKSYF104Z25
	C259		CEA221M10L2
	C265, C282		CEA470M16LS

Mark	Symbol & Description		Part No.
	C266	Chip Capacitor	CCSCH680J50
	C267		CCDRH510J50L
	C268	Chip Capacitor	CCSPH270J50
	C269		CQPA331G100
	C270		CCDCH070D50L
	C272		CCDSH430J50L
	C278, C280, C287, C293	Chip Capacitor	CKSYF473Z50
	C279		CEA010M50LS2
	C281		CEAR47M50LS2
	C283		CEA220M16LS
	C284		CEA3R3M50LS
	C285		CEAR33M50LS2
	C290		CEA101M10L2
	C291, C292	Chip Capacitor	CCSSH090D50
	C302, C317, C318	Chip Capacitor	CKSYF473Z50
	C303	Chip Capacitor	CCSCH270J50
	C304	Chip Capacitor	CCSCH220J50
	C305		CEAR15M50LS2
	C306		CSZA010M25
	C307, C308		CSZA100M25
	C309, C314, C315	Chip Capacitor	CKSYB103K50
	C310, C311		CEA220M16LS
	C312		CEA4R7M35LS
	C313		CEA221M16L2
	C316		CEA221M6R3L2

Tuner Unit (KEH-9000)

MISCELLANEOUS

Mark	Symbol & Description		Part No.
★★	IC1		MB3106M
★★	IC2		NR9200
★★	IC3		AN6540
★★	IC201		PA0013
★★	IC202		PA0014
★★	IC203		PA0015
★★	IC251		HA12434-A or HA12434-B
★★	IC301		PD4041
★★	Q1 — Q4, Q7, Q8, Q11		2SC2458
★★	Q5		2SD667
★★	Q6		2SA1048
★★	Q9, Q205	Chip Transistor	2SC2712-LG or 2SC2712-LL or 2SC2712-LY or
★★	Q10	Chip Transistor	2SD601-YQ or 2SD601-YR or 2SD601-YS 2SB709-AQ or 2SB709-AR or 2SB709-AS
★★	Q12		2SD1276
★★	Q201 — Q204, Q252, Q253, Q259, Q260		2SC2458
★★	Q251		2SK163

Mark	Symbol & Description		Part No.
★★	Q301, Q302, Q304, Q313		2SA1048
★★	Q311		2SK330-Y
★★	Q312, Q316		2SC2458
★★	Q314		2SD1055F
★★	Q317, Q318		2SB822F
★	D1		RD9R1EB2
★	D2, D4, D202 — D205, D306, D312, D313		1S1555 or DS442 or US1040
★	D3		RD9R1EB3
★	D5		SM-1A-02
★	D251 — D254		1S1555
★	D255		KV1235Z5-A or KV1235Z5-B or KV1235Z5-C or KV1235Z5-D or KV1235Z5-E or KV1235Z5-F
★	D301, D304	Chip Diode	MA151WA
★	D305		RD3R3EB2
★	D307		RD5R6EB2
★	D308	Chip Diode	MA151WK
★	D309		RD6R2EB2
★	D310		RD4R7EB1
	L201	Ferri-Inductor, 15 μH	CTF-156
	L201	Ferri-Inductor, 2.7 μH	CTF-155
	L202	Ferri-Inductor, 100 μH	CTF-157
	T201	Coil	CTC-171
	T251	Coil	CTB-149
	T252	Coil	CTB-161
	T253, T255	Coil	CTB-151
	T257	Coil	CTB-161
	T259	AM Coil	CTE-139
	T260	AM Coil	CTE-149
	IB1		CWW-206
	RL1	Relay	CSR-020
	CR201		CWW-183
	CR202		CWW-182
	CF201	Ceramic Filter	CTF-181
	CF251	Filter	CTF-101
	CF252	Filter	CTF-161
	S1 — S3	Switch	CSG-207
★★	VR1, VR2	Semi-fixed, 33 kΩ(B)	CCP-248
★★	VR201	Semi-fixed, 22 kΩ(B)	CCP-247
★★	VR202	Semi-fixed, 1.5 kΩ(B)	CCP-240
★★	VR203	Semi-fixed, 6.8 kΩ(B)	CCP-24
	X301	Crystal Resonator	CSS-02

RESISTORS

Mark	Symbol & Description	Part No.
	R1 – R14, R16 – R23, R25 – R35, R38 – R43, R46 – R65, R68, R68, R201 – R206, R208 – R210, R212, R214 – R225, R251 – R256, R261 – R274, R282 – R284, R288, R301 – R304,	RS1/8S□□□J
	R306 – R308, R314 – R318, R323, R325, R326 – R333, R336, R338 – R340 Chip Resistor	
	R44, R66, R207, R211	RD1/4PM□□□J
	R285 – R287	RD1/6VS□□□J
	R511 – R526, R528, R531 – R549, R564, R565 Chip Resistor 0Ω	RS1/8S0R0J

CAPACITORS

Mark	Symbol & Description	Part No.
	C1, C2 Chip Capacitor	CKSYB681K50
	C3, C4, C11, C13 – C15, C19, C20	CEA470M16LS
	C5, C6	CEANL4R7M50LL
	C7, C8, C30 Chip Capacitor	CKSYB103K50
	C9, C10, C31 Chip Capacitor	CKSYB223K25
	C12	CEA221M10L2
	C16, C17, C25	CEA100M25LS
	C18	CEA4R7M35LS
	C21	CEA010M50LS2
	C22	CEA221M16LS
	C23, C24 Chip Capacitor	CKSYF104Z25
	C26 Feed through Capacitor	CCL-124
	C29	CEA220M16LS
	C201 Chip Capacitor	CKSYF104Z25
	C202, C204, C211	CEA010M50LS2
	C203, C213 Chip Capacitor	CCSSL101K50
	C205, C217	CEA10M25LS
	C206 – C210 Chip Capacitor	CKSYB223K25
	C212, C221 Chip Capacitor	CKSYB103K50
	C214	CEA2R2M50LS2
	C215, C230	CEA220M16LS
	C216 Chip Capacitor	CKSYB681K50
	C218	CEA4R7M35NPLL
	C219, C220	CEA470M16LS
	C222 – C224 Chip Capacitor	CKSYB822K50
	C225	CQMA183J50L
	C226	CSZA010M25
	C227	CSZA1R5M25
	C228	CSZA2R2M25
	C229	CQSA102J50
	C231, C232	CEA3R3M50LS
	C251, C254, C257, C274, C277, C286 Chip Capacitor	CKSYB223K25
	C252, C288 Chip Capacitor	CKSYB103K50
	C253 Chip Capacitor	CKSYB332K50
	C255, C256, C261, C262, C264 Chip Capacitor	CKSYF473Z50
	C258, C273, C289 Chip Capacitor	CKSYF104Z25
	C259	CEA221M10L2
	C265, C282	CEA470M16LS
	C266 Chip Capacitor	CCSPH470J50
	C267	CQPA431G100
	C270	CCDCH110J50L
	C278, C280, C287 Chip Capacitor	CKSYF473Z50
	C279	CEA010M50LS2
	C281	CEAR47M50LS2
	C283	CEA220M16LS
	C284	CEA3R3M50LS
	C285	CEAR33M50LS2
	C290	CEA101M10L2
	C291, C292	CCSSH100D50
	C302, C317, C318 Chip Capacitor	CKSYF473Z50
	C303 Chip Capacitor	CCSCH270J50
	C304 Chip Capacitor	CCSCH220J50
	C307, C308	CSZA100M25
	C309, C314, C315 Chip Capacitor	CKSYB103K50
	C310, C311	CEA220M16LS
	C312	CEA4R7M35LS
	C313	CEA221M16L2
	C316	CEA221M6R3L2

Miscellaneous Parts List

Mark	Symbol & Description		Part No.
	Graphic EQ. Unit		CWG-127
★	D1, D2		SM-1A-02
★★	M	Motor	CXM-104
★	SO1	Solenoid	CXP-035
★	SO2	Solenoid	CXP-034
★★	S1	Switch (FF/REW)	CSN-070
	C1		CEA471M16L2

11. CABINET EXPLODED VIEW

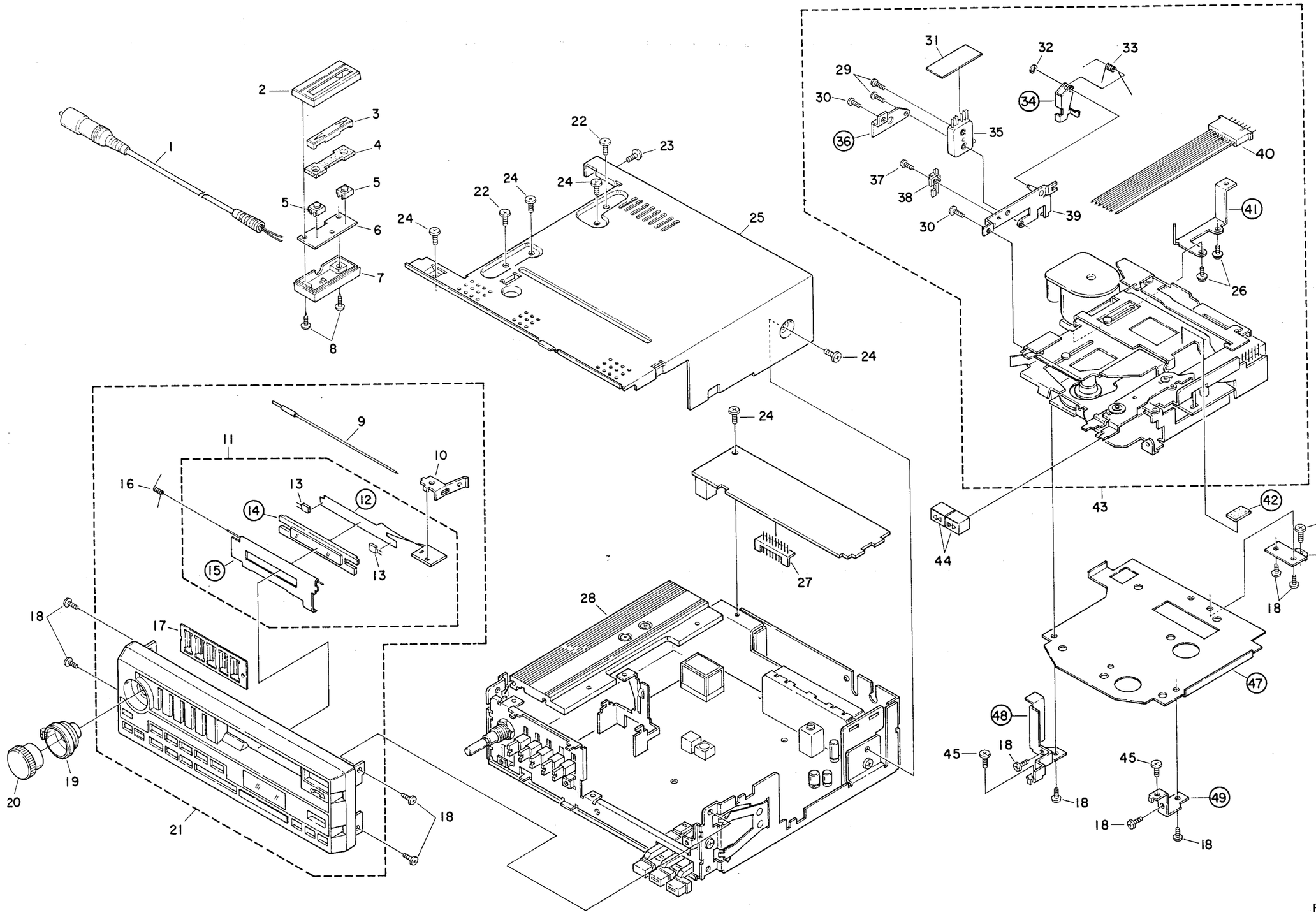

Fig. 18

- **Parts List**

NOTE:

- *For your P*
  ★ ★ and
  ★ ★: GEI
  This classif
  number, te
- *Parts whos*

Mark	No.
	1.
	2.
★	3.
	4.
★★	5.
	6.
	7.
	8.
	9.
	10.
	11.
	12.
★	13.
	14.
	15.
	16.
	17.
	18.
★	19.
★	20.
	21.
	22.
	23.
	24.
	25.
	26.
	27.
	28.

• Parts List

NOTE:

- *For your Parts Stock Control, the fast moving items are indicated with the marks ★ ★ and ★.*
  ★ ★: GENERALLY MOVES FASTER THAN ★.
  This classification shall be adjusted by each distributor because it depends on model number, temperature, humidity, etc.
- *Parts whose parts numbers are omitted are subject to being not supplied.*

Mark	No.	Part No.	Description
	1.	CDE-859	Cord
	2.	CNK-095	Case
★	3.	CAC-770	Button
	4.	CNN-134	Spacer
★ ★	5.	CSG-176	Switch
	6.	CNL-562	P.C. Board
	7.	CNK-094	Case
	8.	BMZ26P050FBK	Screw
	9.	CDF-055	Connector
	10.	CNG-240	Holder
	11.	CXD-120	Door
	12.		P.C. Board
★	13.	BG4524K	LED
	14.		Lens
	15.		Door
	16.	CBH-684	Spring
	17.	CBL-217	Spring
	18.	BMZ26P040FMC	Screw
★	19.	CAA-501	Knob
★	20.	CAA-502	Knob
	21.	CXD-119	Grille Assy (KEH-9300SDK)
		CXD-166	Grille Assy (KEH-9300, 9000)
	22.	BMZ30P060FMC	Screw
	23.	BMZ30P040FMC	Screw (KEH-9300SDK)
	24.	BMZ30P040FMC	Screw
	25.	CXD-125	Case Unit (KEH-9300SDK)
		CXD-124	Case Unit (KEH-9300, 9000)
	26.	PMS26P040FMC	Screw
	27.	CKS-275	Plug
	28.	CWM-209	Tuner Amp Assy (KEH-9300SDK)
		CWM-211	Tuner Amp Assy (KEH-9300)
		CWM-210	Tuner Amp Assy (KEH-9000)
	29.	CBA-106	Screw
	30.	BMZ23P025FMC	Screw
	31.	CNL-278	P.C. Board
	32.	YE15FUC	Washer
	33.	CBH-680	Spring
	34.		Arm
★ ★	35.	CSF-014	Switch
	36.		Cover
	37.	BMZ20P040FMC	Screw
	38.	CSN-071	Switch
	39.	CXC-743	Bracket Unit
	40.	CDF-588	Connector
	41.		Bracket
	42.		Spacer
	43.	CXK-310	Cassette Mechanism Assy
★	44.	CAC-554	Button
	45.	BMZ30P050FMC	Screw
	46.		Bracket
	47.		Bracket
	48.		Bracket
	49.		Bracket

12. TUNER AMP ASSY (1/2) EXPLODED VIEW

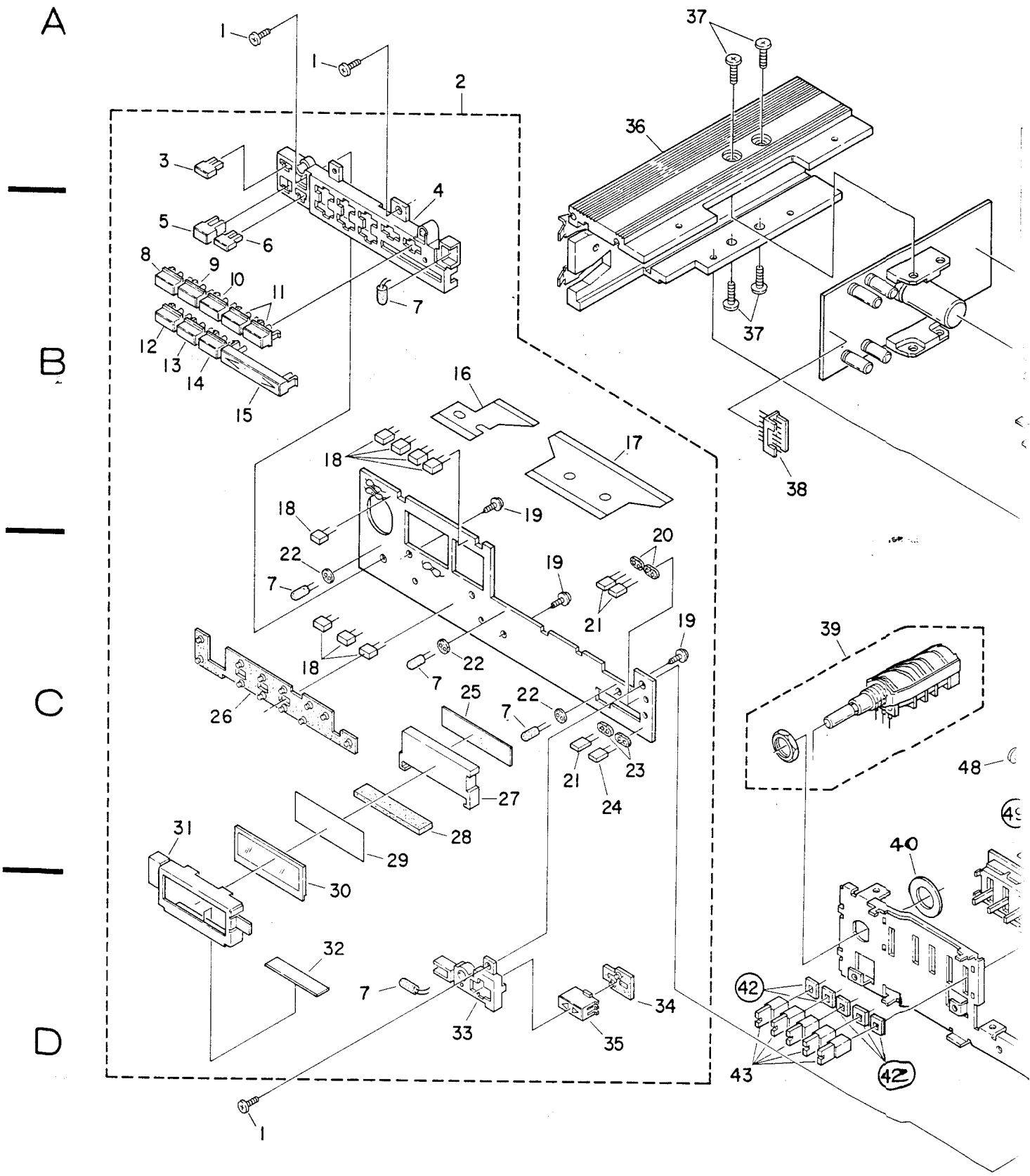

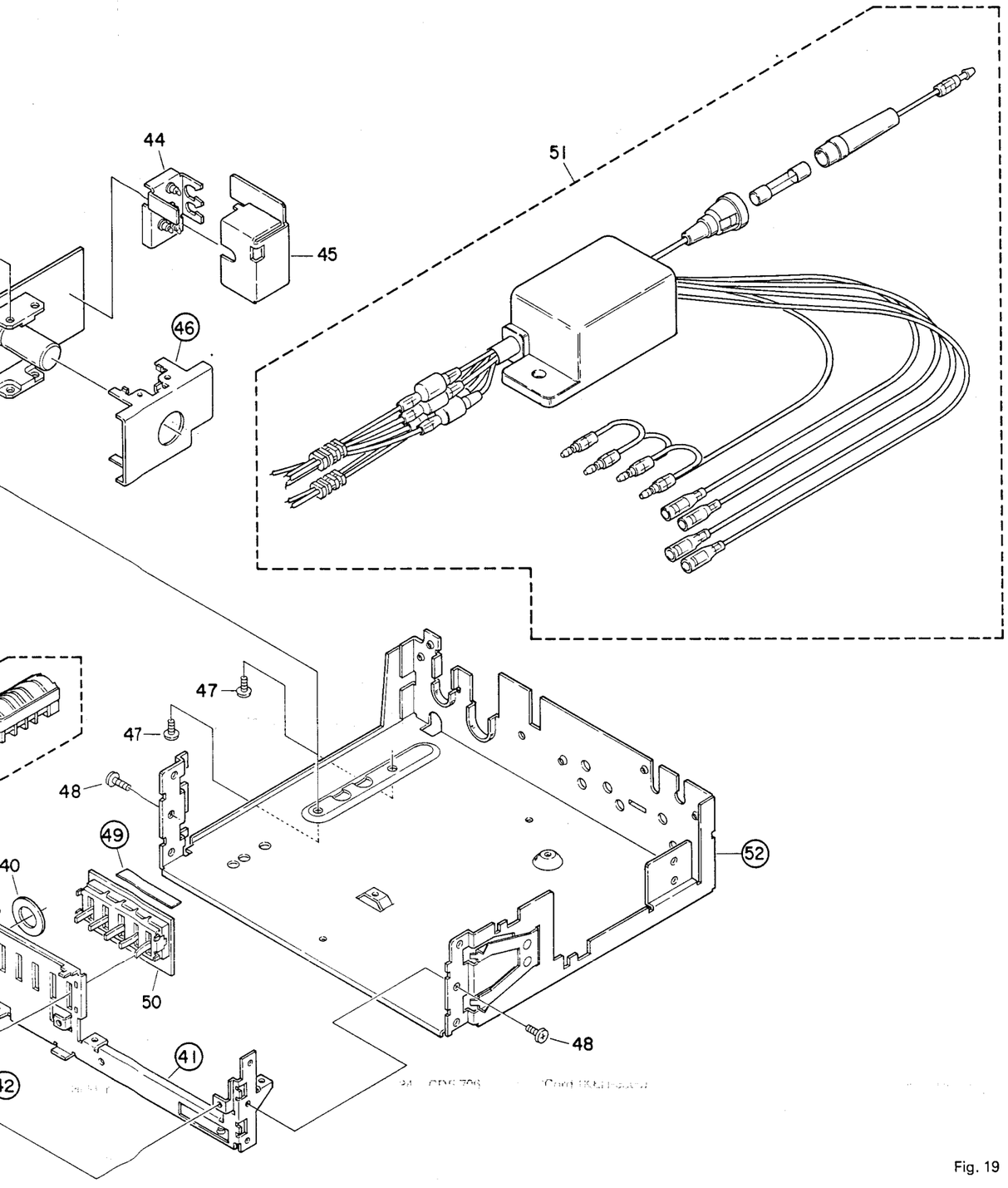

Fig. 19

• **Parts List**

Mark	No.	Part No.	Description
	1.	BMZ26P060FMC	Screw
	2.	CWS-192	Key Board Unit (KEH-9300SDK)
		CWS-197	Key Board Unit (KEH-9300)
		CWS-194	Key Board Unit (KEH-9000)
★	3.	CAC-789	Button (KEH-9300SDK)
	4.	CNW-653	Holder
★	5.	CAC-699	Button
★	6.	CAC-700	Button
★★	7.	CEL-147	Lamp, 14V 40mA
★	8.	CAC-782	Button
★	9.	CAC-783	Button
★	10.	CAC-784	Button
★	11.	CAC-697	Button
★	12.	CAC-785	Button
★	13.	CAC-786	Button
★	14.	CAC-787	Button
★	15.	CAC-698	Button
	16.	CNL-475	P.C. Board
	17.	CNL-476	P.C. Board
★	18.	BG5724K	LED
	19.	BTN26P060FMC	Screw
	20.	CNW-549	Spacer
★	21.	BG3422K	LED
	22.	CNW-662	Spacer
	23.	CNW-549	Spacer
★	24.	AA3422K	LED
	25.	CNN-137	Spacer
	26.	CNN-649	Rubber
	27.	CNN-754	Lens
	28.	CNN-656	Rubber
	29.	CNW-655	Plate
	30.	FTD-6082H	LCD (KEH-9300SDK, 9300)
		FTD-6081H	LCD (KEH-9000)
	31.	CNG-095	Holder
	32.	CNN-052	Insulator
	33.	CNW-650	Holder
	34.	CNW-648	Rubber
★	35.	CAC-790	Button
	36.	CXD-123	Heat Sink Unit
	37.	BMZ26P100FMC	Screw
	38.	CKS-272	Plug
★★	39.	CCS-362	Volume/Switch
	40.	CBE-084	Spacer
	41.		Frame
	42.		Spacer
★	43.	CAA-503	Knob
	44.	CCL-123	Feed through Capacitor
	45.	CNG-088	Holder
	46.		Holder
	47.	BMZ30P060FMC	Screw
	48.	BMZ30P040FMC	Screw
	49.		Insulator
	50.	CWG-127	Graphic EQ. Unit
	51.	CDF-592	Cord
	52.		Chassis Unit

13. TUNER AMP ASSY (2/2) EXPLODED VIEW

• **Parts List**

Mark	No.	Part No.	Description
	1.	CDF-731	Connector
	2.	CDF-671	Connector
	3.	CDF-729	Cord
★★	4.	CSH-070	Switch
	5.	CKS-214	Plug
	6.	CKS-271	Plug
	7.	CKS-269	Plug
	8.	CDF-590	Connector
★	9.	CXD-128	Button Unit
★	10.	CXD-126	Button Unit
	11.	CDF-586	Connector
	12.		Holder
	13.	CCL-124	Feed through Capacitor
	14.		Holder
	15.	CKS-270	Plug
	16.	BMZ30P040FMC	Screw
★★	17.	CSG-207	Switch
	18.	CBL-211	Spring
	19.	BMZ26P030FMC	Screw
	20.		Holder
	21.	CWB-151	FM Front End
	22.	CDF-660	Connector
	23.		Insulator
	24.	BMZ30P040FMC	Screw (KEH-9300SDK)
	25.	CNF-387	Clamper
	26.		Chassis Unit
	27.	BMZ30P040FMC	Screw (KEH-9300, 9000)
	28.		Holder (KEH-9300, 9000)
	29.		Holder (KEH-9300SDK)
	30.	CDF-668	Connector
	31.	CDF-591	Connector (KEH-9300SDK)
	32.	CDF-730	Cord
	33.	CDH-073	Antenna Cable
	34.	CDF-706	Cord (KEH-9300)

• Tuner Amp Assy (2/2)

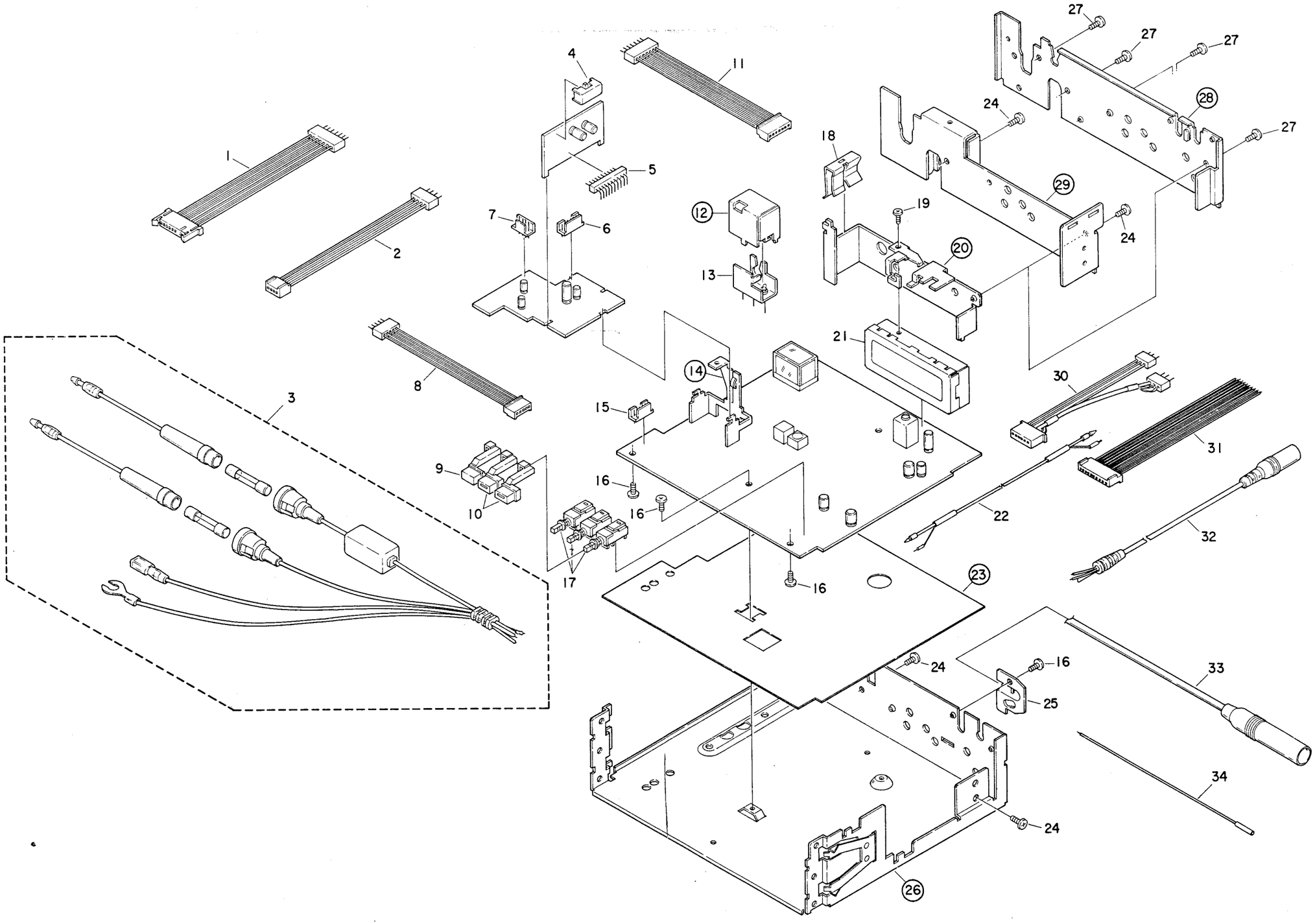

Fig. 20

14. PACKING MEHTOD

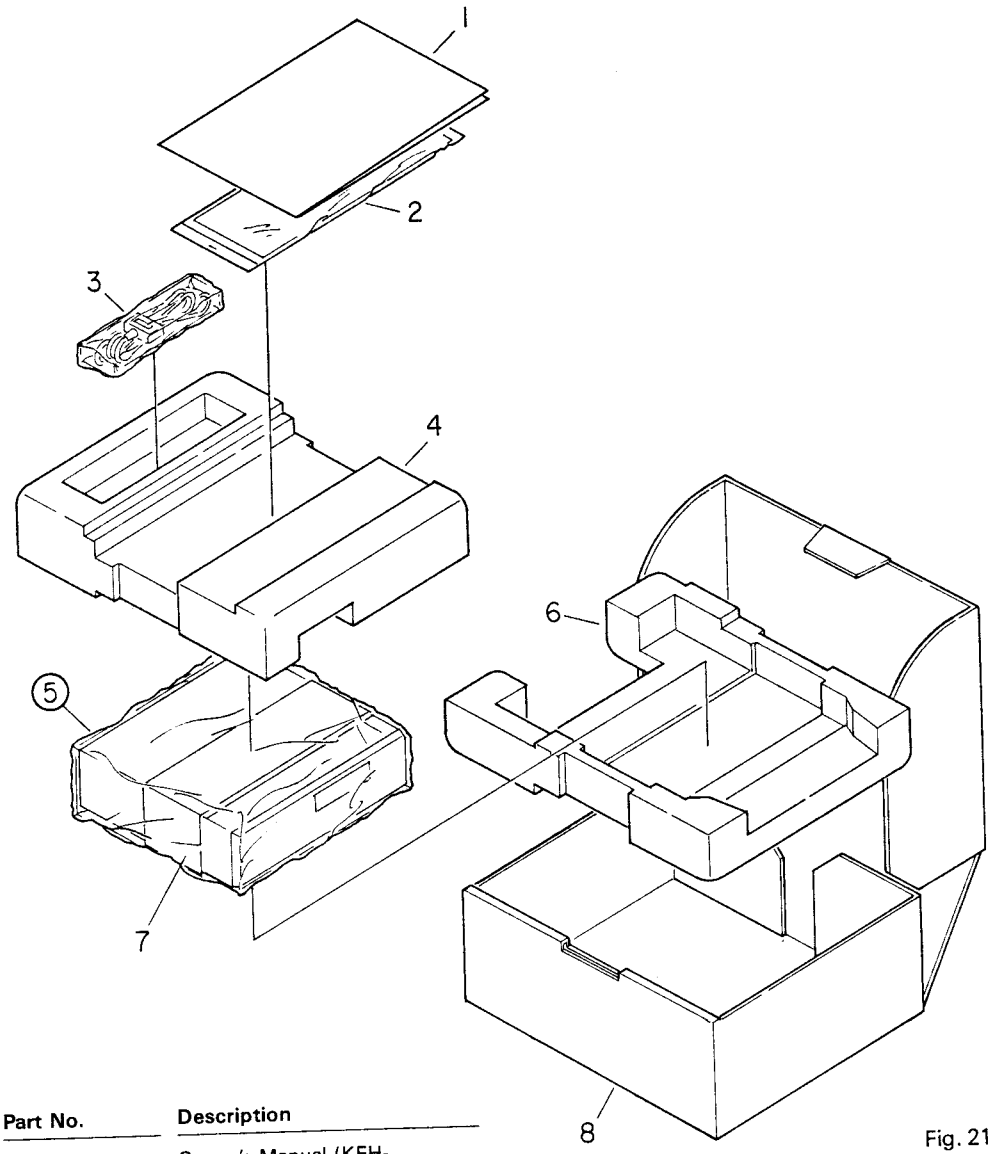

Fig. 21

• **Parts List**

Mark	No.	Part No.	Description
	1.	CRD-398	Owner's Manual (KEH-9300SDK)
		CRD-397	Owner's Manual (KEH-9300)
		CRD-396	Owner's Manual (KEH-9300)
		CRD-399	Owner's Manual (KEH-9000)
			Card (KEH-9300SDK, 9300)
			Card (KEH-9300SDK)
			Card (KEH-9300SDK)
	2.	CEA-885	Accessory Assy
	2-1.	CDE-437	Cord
	2-2.	CNF-111	Strap
	2-3.	CNF-382	Lever
	2-4.	CNW-642	Holder
	2-5.		Screw Kit
	2-5-1.	CBA-028	Screw for Strap
	2-5-2.	NF40FMC	Nut
	2-5-3.	NF50FMC	Nut
	2-5-4.	PMB50Y160FMC	Screw
	2-5-5.	WS40FMC	Washer
	3.	CEA-862	Remote Switch Assy
	3-1.		Remote Switch
	3-2.	CWM-684	Spacer
	4.	CHD-333	Styrofoam (KEH-9300SDK)
		CHD-131	Styrofoam (KEH-9300, 9000)
	5.		Cover
	6.	CHD-332	Styrofoam (KEH-9300SDK)
		CHD-130	Styrofoam (KEH-9300, 9000)
	7.	CNF-383	Holder
	8.	CHD-336	Carton (KEH-9300SDK)
		CHD-334	Carton (KEH-9300)
		CHD-338	Carton (KEH-9000)