JVC

SERVICE MANUAL

COMPACT VHS CAMCORDER

GR-SXM335U, SXM730U, SXM735U

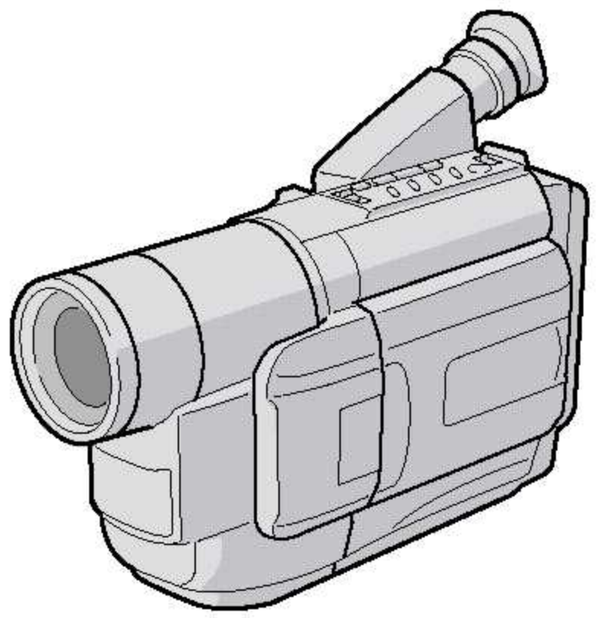

DIGITAL STILL CAMERA

S-VHS C

Super VHS

Super VHS ET

Regarding service information other than these sections, refer to the GR-SXM330U, SXM930U service manual (No. 86595). Also, be sure to note important safety precautions provided in the service manual.

SPECIFICATIONS *(The specifications shown pertain specifically to the model GR-SXM735U)*

Camcorder

General

Format : S-VHS/VHS NTSC standard
Power source : DC 11 V ⎓ (Using AC Adapter)
DC 6 V ⎓ (Using battery pack)
Power consumption
Viewfinder on : 4.7 W
LCD monitor on : 5.4 W
Video light : 3.0 W
Signal system : NTSC-type
Video recording system
Luminance : FM recording
Color : Converted sub-carrier direct recording
Conforms to VHS standard
Cassette : S-VHS C / VHS C cassette
Tape speed
SP : 33.35 mm/sec. (1-5/16 ips)
EP : 11.12 mm/sec. (7/16 ips)
Recording time (max.)
SP : 40 minutes
EP : 120 minutes (with TC-40)
D.S.C. format
Recording format : Digital data storage (based on JPEG)
Recording medium : Built-in flash memory, 2 Mbyte
Number of storable shots
FINE mode : approx. 30 shots
STANDARD mode : approx. 60 shots
Image size : 640 x 480 pixels (when captured on a PC)

Operating temperature : 0°C to 40°C (32°F to 104°F)
Operating humidity : 35% to 80%
Storage temperature : –20°C to 50°C (–4°F to 122°F)
Weight : Approx. 900 g (2.0 lbs)
Dimensions : 206 mm x 112 mm x 118 mm (8-1/8" x 4-7/16" x 4-11/16") (with the LCD monitor closed and with the viewfinder fully tilted downward)
Pickup : 1/4" format CCD
Lens : F1.6, f = 3.9 mm to 62.4 mm, 16:1 power zoom lens with auto iris and macro control, filter diameter 40.5 mm
Viewfinder : Electronic viewfinder with 0.55" color LCD
White balance adjustment : Auto/Manual adjustment
LCD monitor : 2.5" diagonally measured, LCD panel/TFT active matrix system
Speaker : Monaural

Connectors

Video : 1 V (p-p), 75 Ω unbalanced, analog output (via Video output connector)
Audio : 300 mV (rms), 1 kΩ analog output (via Audio output connector)
Digital : ø2.5 mm, 4-pole, mini-head jack
S-Video : **Y** : 1 V (p-p), 75 Ω, analog output
C : 0.29 V (p-p), 75 Ω, analog output

AC Adapter AP-V10U

Power requirement
U.S.A. and Canada : AC 120 V~, 60 Hz
Other countries : AC 110 V to 240 V~, 50 Hz/60 Hz
Output : DC 11 V ⎓, 1 A
Dimensions (W x H x D) : 59 mm x 31 mm x 69 mm (2-3/8" x 1-1/4" x 2-3/4")
Weight : Approx. 130 g (0.29 lbs)

Optional Accessories

- **Battery Packs BN-V12U, BN-V20U, BN-V400U**
- **A/V (Audio/Video) Cable**
- **S-Video Cable QAM0004-004**
- **Compact S-VHS (S-VHS C) Cassettes ST-C-40/30/20**
- **Compact VHS (VHS C) Cassettes TC-40/30/20**
- **Active Carrying Bag CB-V7U**

Some accessories are not available in some areas. Please consult your nearest JVC dealer for details on accessories and their availability.

Specifications shown are for SP mode unless otherwise indicated. E & O.E. Design and specifications subject to change without notice.

This service manual is printed on 100% recycled paper.
COPYRIGHT © 2001 VICTOR COMPANY OF JAPAN, LTD.

No. 86616
March 2001

TABLE OF CONTENTS

DIFFERENT TABLE ..... 1 to 3

4. CHARTS AND DIAGRAMS

4.1 BOARD INTERCONNECTIONS 4-1
4.2 DSP SCHEMATIC DIAGRAM 4-3
4.3 IRIS & AF/ZOOM SCHEMATIC DIAGRAM 4-5
4.4 REGULATOR SCHEMATIC DIAGRAM 4-7
4.5 LCD CTL SCHEMATIC DIAGRAM (FOR SXM735) 4-9
4.6 MAIN CIRCUIT BOARD 4-11

5. PARTS LIST

5.1 PACKING AND ACCESSORY ASSEMBLY <M1> 5-1
5.2 FINAL ASSEMBLY <M2> 5-3
5.3 ELECTRICAL PARTS LIST
MAIN BOARD ASSEMBLY <01> 5-6

The following table indicate main different points between models GR-SXM930U, SXM735U, SXM730U/UC, SXM330U and GR-SXM335U.

ITEM \ MODEL	GR-SXM930U	GR-SXM735U	GR-SXM730U/UC	GR-SXM330U	GR-SXM335U
BATTERY PACK	BN-V11U	BN-V11U	BN-V11U	BN-V11U	BN-V20BU
BODY COLOR	Silver	Silver	Silver	Metallic gray	Metallic gray
DSC	Used	Used	Used	Not used	Not used
LCD MONITOR	3"	2.5"	3"	2.5"	2.5"
PC CONNECTION CABLE	Optional	Provided	Provided	Optional	Optional
VIEW FINDER	Color	Color	Black/White	Black/White	Black/White

The following table indicate different parts number between models GR-SXM930U, SXM735U, SXM730U/UC, SXM330U and GR-SXM335U.

PACKING AND ACCESSORY ASSEMBLY <M1> Note: As for IB (INSTRUCTIONS), refer to sec.5

REF. NO.	ITEM \ MODEL	GR-SXM930U	GR-SXM735U	GR-SXM730U	GR-SXM730UC	GR-SXM330U	GR-SXM335U
1	PACKING CASE	LY32179-005A	←	←	←	LY32179-004A	←
7	REGIST.CARD/WARRANTY CARD	BT-51020-2	←	←	BT-52004-1	BT-51020-2	←
⚠ 11	BATTERY PACK	YQ10629A	←	←	←	←	LY31199-001A
14	CORE FILTER	QQR0491-002	←	←	←	–	–
15	PC CONNECTION CABLE	QAM0084-001	←	←	←	–	–
16	REMOTE CONTROL UNIT	LY42129-001A	←	←	←	←	–
18	AAA(R03)BATTERY,X2	Used	Used	Used	Used	Used	Not Used
19	CD ROM	* LY31133-001B	LY32210-007A	←	←	–	–
20	POLY BAG	* LY30023-010A	–	–	–	–	–
21	SER.NET CARD	–	–	–	BT-20071B	–	–
22	SOFT WARE PERM.	YU30843-4	←	←	←	–	–
26	SHEET (INSTALL)	LYT0309-004A	←	←	←	–	–

Note: Mark – is not used. Mark ← is same as left. Mark * reference model was also changed.

FINAL ASSEMBLY <M2>

REF. NO.	ITEM / MODEL	GR-SXM930U	GR-SXM735U	GR-SXM730U/UC	GR-SXM330U	GR-SXM335U
101	LOWER CASE ASSY	LY20684-009A	←	←	LY20684-008A	←
102	COVER(JACK)	* LY31945-001B	LY31945-001C	←	* LY31945-001B	LY31945-001C
104	FRONT COVER ASSY	LY20683-015A	←	←	LY20683-005B	←
105	CASS.COVER(M)ASSY	* LY20694-002A	LY20694-002B	←	* LY20694-004A	LY20694-004B
106	UPPER CASE(M)	LY10257-018A	LY10257-037A	LY10257-036A	LY10257-015A	LY10257-039A
109	TOP OPE UNIT	LY20614-008B	←	←	LY20614-012B	←
114	STICKER(D)	LY32061-004A	←	←	LY32061-005A	←
115	SCREW	* QYSLSF2060D,X5	QYSLSF2060D,X4	←	* QYSLSF2060D,X5	QYSLSF2060D,X4
136	SCREW/SPECIAL SCREW	* QYSLSF2060D	LY42981-001A	←	* QYSLSF2060D	LY42981-001A
154	HOLDER(DSC P.)	LY20645-001A	←	←	–	–
155	SCREW	QYSLSF2060D	←	←	–	–
156	FPC(DSC)ASSY	LY42875-001A	←	←	–	–
156A	S.SHEET(DSC FPC)	LY42876-001A	←	←	–	–
157	INSULATER	YU40341	←	←	–	–

ELECTRONIC VIEWFINDER ASSEMBLY <M4>

REF. NO.	ITEM / MODEL	GR-SXM930U	GR-SXM735U	GR-SXM730U/UC	GR-SXM330U	GR-SXM335U
⚠ 300	E.VF ASSY	LYH20242-001A	←	–	–	–
303	SPACER(HOLDER)	* LY42221-001C	LY43013-001A	–	–	–
⚠ 350	E.VF ASSY	–	–	LY20701-001A	←	←

MONITOR ASSEMBLY <M5>

REF. NO.	ITEM / MODEL	GR-SXM930U	GR-SXM735U	GR-SXM730U/UC	GR-SXM330U	GR-SXM335U
⚠ 500	MONITOR ASSY	* LYH20217-014A	LYH20217-019B	LYH20217-014B	* LYH20217-015A	LYH20217-005B
⚠ 501	M.COVER ASSY	LY20679-008A	←	←	LY20679-009A	←
502	M.CASE(3/2.5)ASSY	LY32035-001A	LY32036-001A	LY32035-001A	LY32036-001A	←
504	HINGE COVER(U)	LY31939-001A	←	←	LY31939-004A	←
515	HOLDER(3/2.5PWB)	LY20647-001A	LY20672-001B	LY20647-001A	LY20672-001B	←
519	BACK LIGHT	QLL0094-001	QLL0093-001	QLL0094-001	QLL0093-001	←
520	LCD MODULE	QLD0118-001	QLD0176-001	QLD0118-001	QLD0176-001	←

MAIN BOARD ASSEMBLY <01>

REF. NO.	ITEM / MODEL	GR-SXM930U	GR-SXM735U	GR-SXM730U/UC	GR-SXM330U	GR-SXM335U
PW	MAIN BOARD ASSY	YB10310UG-02	YB10310VA	YB10310UZ	YB10310UD-01	YB10310UY

Note: Mark – is not used. Mark ← is same as left. Mark * reference model was also changed.

C-VF BL BOARD ASSEMBLY <06>

REF. NO.	ITEM / MODEL	GR-SXM930U	GR-SXM735U	GR-SXM730U/UC	GR-SXM330U	GR-SXM335U
PW	C-VF BL BOARD ASSY	YB20901A	←	–	–	–
R7562	MG RESISTOR	* NRSA63J-470X	NRSA63J-360X	–	–	–

MONITOR BOARD ASSEMBLY <07>

REF. NO.	ITEM / MODEL	GR-SXM930U	GR-SXM735U	GR-SXM730U/UC	GR-SXM330U	GR-SXM335U
PW	MONITOR BOARD ASSY	* YB20900A-01	YB20900D	YB20900C	* YB20900B-01	YB20900D
IC7501	IC	* TC7WH34FK	–	–	* TC7WH34FK	–
R7511,R7512	MG RESISTOR	NRSA63J-223X	–	NRSA63J-223X	–	–
R7513	MG RESISTOR	–	NRSA63J-103X	–	NRSA63J-103X	←
R7514	MG RESISTOR	NRSA63J-333X	–	NRSA63J-333X	–	–
R7515	MG RESISTOR	NRSA63J-562X	NRSA63J-302X	NRSA63J-562X	NRSA63J-302X	←
R7519 to R7521	MG RESISTOR	* –	NRSA63J-0R0X	←	* –	NRSA63J-0R0X
C7502	CAPACITOR	* NCB31EK-103X	–	–	* NCB31EK-103X	–
C7510	CAPACITOR	NCB31EK-103X	–	NCB31EK-103X	–	–

DSC BOARD ASSEMBLY <08>

REF. NO.	ITEM / MODEL	GR-SXM930U	GR-SXM735U	GR-SXM730U/UC	GR-SXM330U	GR-SXM335U
PW	DSC BOARD ASSY	YB20898B	←	←	–	–
WR1	E-SI C WIRE C-F,JP8001/JP8002	* WJM0179-001A	WJM0179-001B	←	–	–

E.VF BOARD ASSEMBLY <60>

REF. NO.	ITEM / MODEL	GR-SXM930U	GR-SXM735U	GR-SXM730U/UC	GR-SXM330U	GR-SXM335U
PW	E.VF BOARD ASSY	–	–	LY41289-002A	←	←

Note: Mark – is not used. Mark ← is same as left. Mark * reference model was also changed.

SECTION 5
PARTS LIST

SAFETY PRECAUTION

Parts identified by the ⚠ symbol are critical for safety. Replace only with specified part numbers.

5.1 PACKING AND ACCESSORY ASSEMBLY <M1>

The instruction manual to be provided with this product will differ according to the destination.

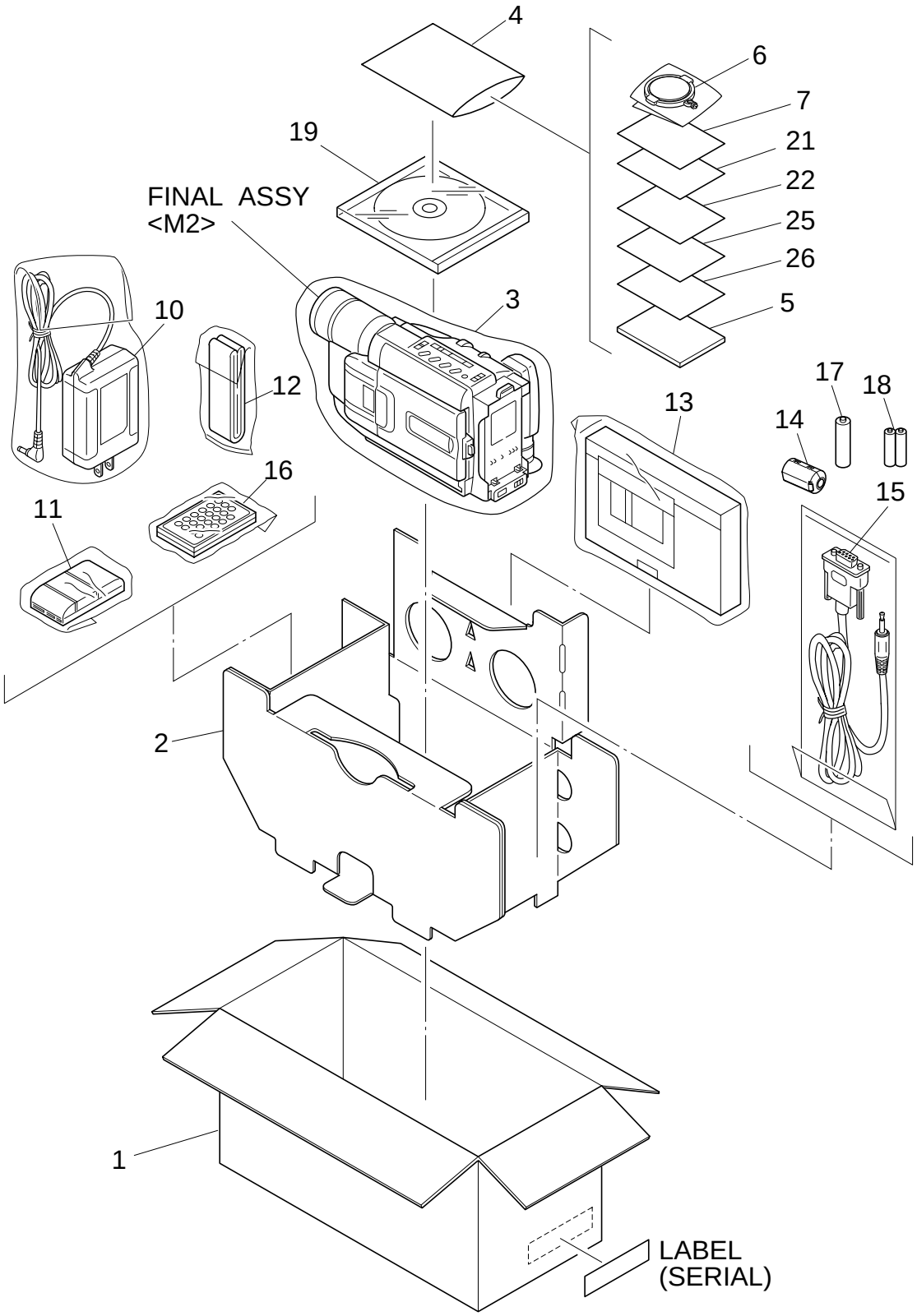

#	⚠	REF No.	PART No.	PART NAME, DESCRIPTION

****

PACKING AND ACCESSORY ASSEMBLY <M1>

	1	LY32179-004A	PACKING CASE,A
		LY32179-005A	PACKING CASE,B,C,D
	2	LY32065-001A	CUSHION
	3	LY30023-002A	POLY BAG
	4	QPA02003506	POLY BAG
⚠	5	LYT0692-001B	IB(EN),A
⚠		LYT0705-001B	IB(EN),B,C
⚠		LYT0721-001B	IB(FR),C
⚠		LYT0778-001A	IB(EN),D
	6	LY41538-002B	LENS CAP
	7	BT-51020-2	REGIST.CARD,A,B,D
		BT-52004-1	WARRANTY CARD,C
⚠	10	LY20739-001A	AC ADAPTER,AP-V10U
⚠	11	YQ10629A	BATTERY PACK,BN-V11U,B,C,D
⚠		LY31199-001A	BATTERY PACK, BN-V20BU,A
	12	LY20186-001A	SHOULDER STRAP
	13	YQ31963A-3	CASSETTE ADAPTER
		or YQ31963B-3	CASSETTE ADAPTER
	14	QQR0491-002	CORE FILTER,B,C,D
	15	QAM0084-001	PC CONNECTION CABLE,B,C,D
	16	LY42129-001A	REMOTE CONTROL UNIT,RM-V715U,B,C,D
	17	–	AA(R6)BATTERY,FOR CASSETTE ADAPTER
	18	–	AAA(R03)BATTERY,FOR RCU,X2 B,C,D
	19	LY32210-007A	CD ROM,B,C,D
	21	BT-20071B	SER.NET CARD,C
	22	YU30843-4	SOFT WARE PERM. B,C,D
⚠	25	LYT0309-001B	IB(SOFT)(EN),B,C,D
	26	LYT0309-004A	SHEET(INSTALL),B,C,D

• **INSTRUCTIONS**
EN ..... ENGLISH
FR ..... FRENCH

MODEL	MARK
GR-SXM335U	A
GR-SXM730U	B
GR-SXM730UC	C
GR-SXM735U	D

5.2 FINAL ASSEMBLY <M2>

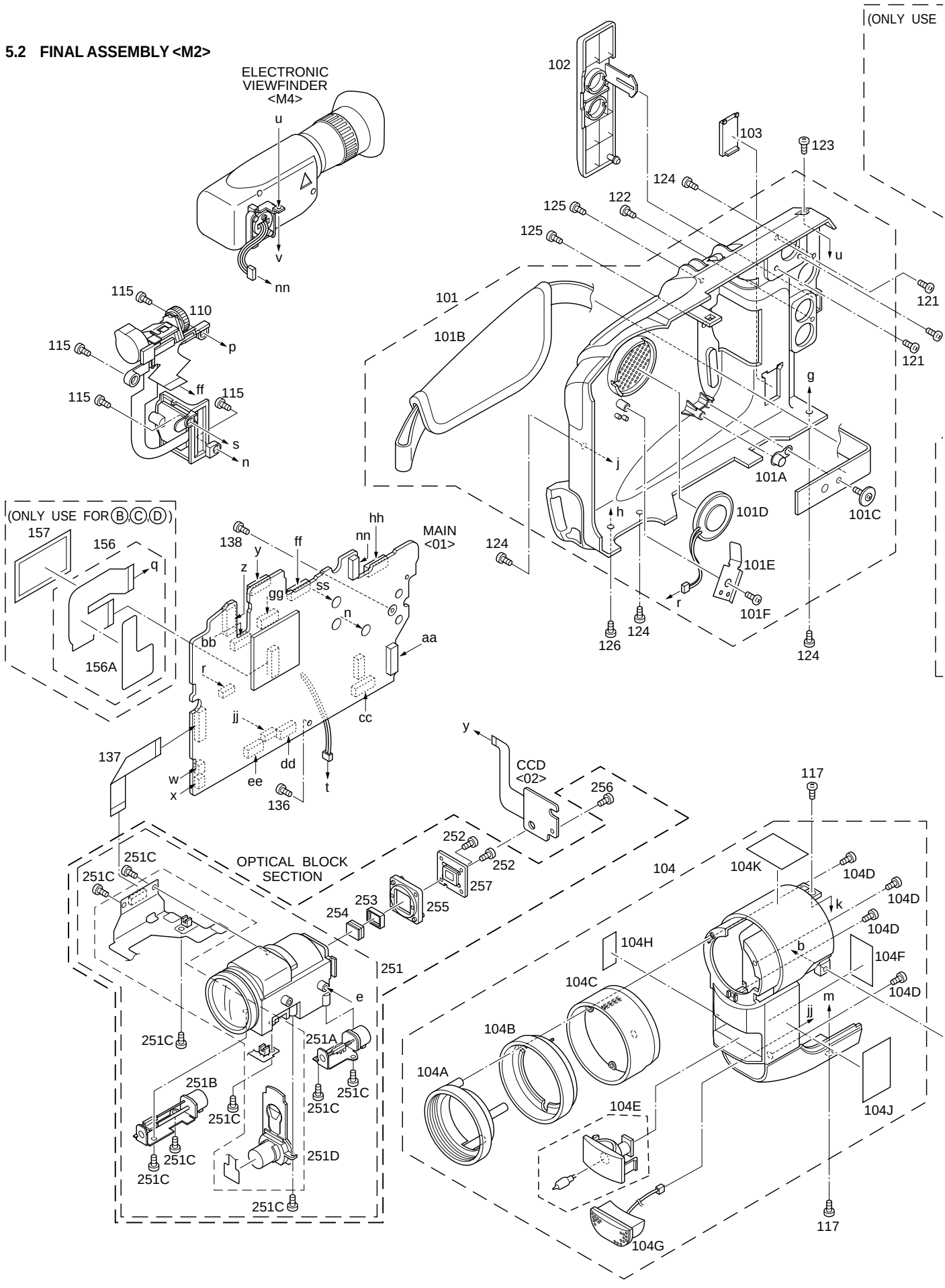

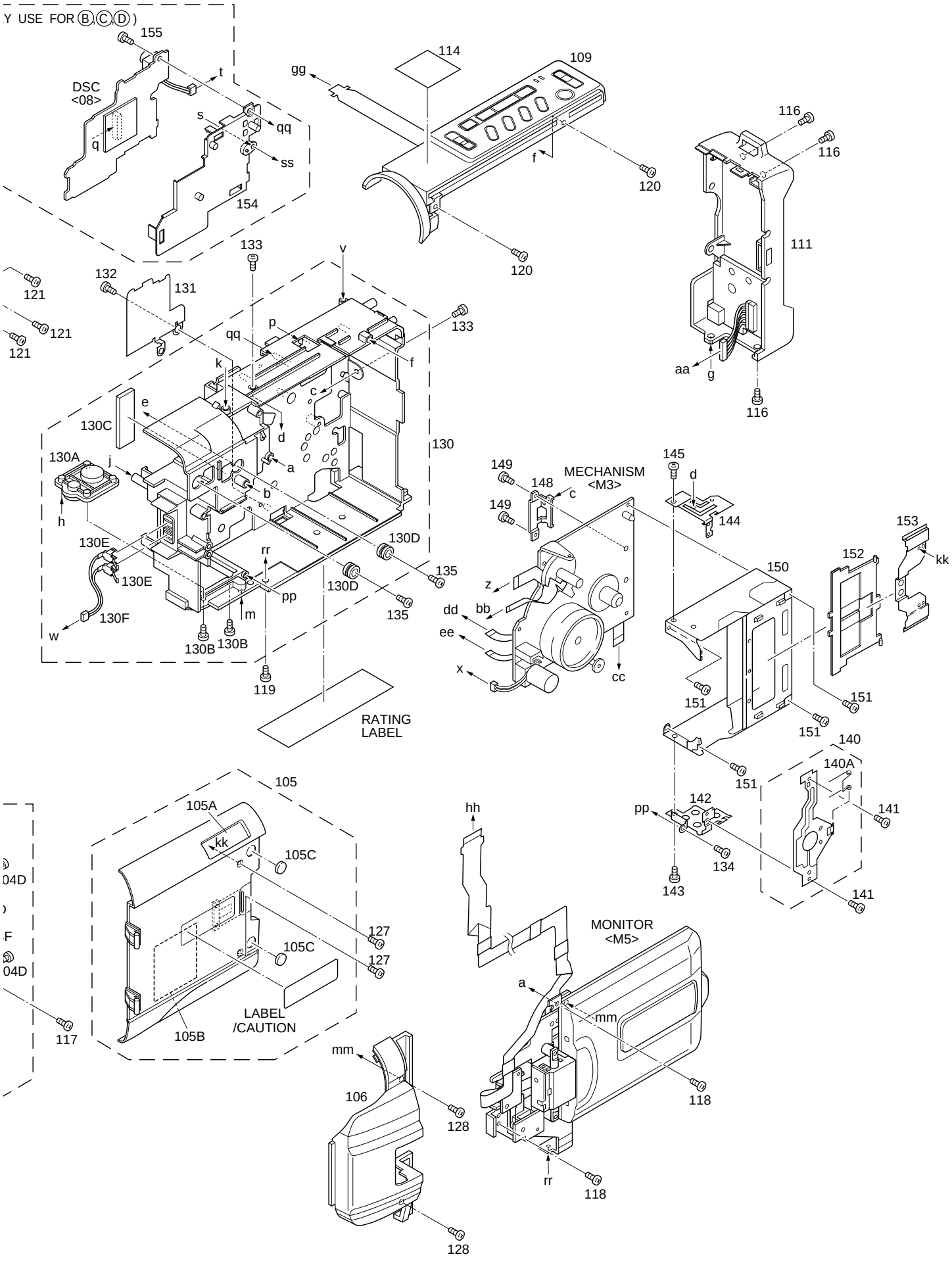
Y USE FOR Ⓑ,Ⓒ,Ⓓ)
155
DSC
<08>
t
s
qq
q
ss
154
114
109
gg
f
120
120
116
116
111
aa
g
116
133
v
132
131
121
121
121
133
p
qq
f
k
c
e
130C
d
130
130A
j
a
b
h
130E
130D
rr
135
130E
pp
130D
135
130F
m
w
130B
130B
119
RATING
LABEL
149
148
MECHANISM
<M3>
c
149
145
d
144
153
152
kk
150
z
dd
bb
ee
x
cc
151
151
151
151
140
140A
141
142
pp
134
143
141
105
105A
kk
105C
04D
F
04D
127
105C
127
LABEL
/CAUTION
117
105B
hh
MONITOR
<M5>
a
mm
118
mm
106
128
rr
118
128

# ⚠ REF No.	PART No.	PART NAME, DESCRIPTION

****

FINAL ASSEMBLY <M2>

101	LY20684-008A	LOWER CASE ASSY,A
	LY20684-009A	LOWER CASE ASSY,B,C,D
101A	LY40081-001A	CAPACITOR
101B	LY20682-001A	GRIP BELT
101C	LY30018-003A	SPECIAL SCREW
101D	QAS0061-001	SPEAKER
101E	LY42764-001B	HOLDER(SPEAKER)
101F	QYSLSF2050Z	SCREW
102	LY31945-001C	COVER(JACK)
103	LY31946-001A	COVER(JIG)
104	LY20683-005B	FRONT COVER ASSY,A
	LY20683-015A	FRONT COVER ASSY,B,C,D
104A	LY31937-001A	HOOD
104B	LY31938-001A	COVER(HOOD)
104C	LY31936-001A	RING
104D	QYSLSF2060D	SCREW,X4
104E	LY32040-001A	DC LIGHT
104F	LY30029-0B4A	SPACER(A)
104G	LY32043-001A	MICROPHONE
104H	YQ44341-6	CAUTION LABEL
104J	LY32058-002A	STICKER(A)
104K	LY32060-003A	STICKER(C)
105	LY20694-002B	CASS.COVER(M)ASSY,B,C,D
	LY20694-004B	CASS.COVER(M)ASSY,A
105A	LY42883-001A	MARK
105B	LY40559-001A	SHIELD SHEET
105C	LY40076-001A	SPACER,X2
106	LY10257-036A	UPPER CASE(M),B,C
	LY10257-037A	UPPER CASE(M),D
	LY10257-039A	UPPER CASE(M),A
109	LY20614-008B	TOP OPE UNIT,B,C,D
	LY20614-012B	TOP OPE UNIT,A
110	LY20613-001A	ZOOM UNIT
111	LY20615-005A	REAR UNIT
114	LY32061-004A	STICKER(D),B,C,D
	LY32061-005A	STICKER(D),A
115	QYSLSF2060D	SCREW,X4
116	QYSLSF2060D	SCREW,X3
117	QYSLSF2060D	SCREW,X3
118	QYSLSF2060D	SCREW,X2
119	QYSLSP2030D	SCREW
120	QYSLSF2060D	SCREW,X2
121	QYSLSF2050Z	SCREW,X3
122	QYSLSF2060D	SCREW
123	QYSLSF2060D	SCREW
124	QYSLSF2060D	SCREW,X4
125	QYSLSF2060D	SCREW,X2
126	QYSLSF2060D	SCREW
127	QYSLSP2030D	SCREW,X2
128	QYSLSP2030D	SCREW,X2
130	LY20678-001A	FRAME ASSY
130A	YQ31843	BASE
130B	QYSLSF2060D	SCREW,X2
130C	LY30029-0A4A	SPACER(A)
130D	LY41082-001A	CUSHION(OP),X2
130E	YQ43810-1-1	CONTACT(LIGHT),X2
130F	WJM0167-001A	E-SI C WIRE C-F,MAIN CN4
131	LY42758-001A	S.CASE(MAIN)
132	QYSPSTU1725M	SCREW
133	LY41173-001A	SPECIAL SCREW,X2
134	QYSLSF1750D	SCREW
135	LY30018-050A	SPECIAL SCREW,X2
136	LY42981-001A	SPECIAL SCREW
137	WJT0039-001A	E-CARD WIRE,OP-MAIN CN15
138	QYSLSF2060D	SCREW
140	LY31790-001A	FRONT FRAME ASSY
140A	YQ44144-1-1	TAPE GUIDE
141	SPSH1725M	SCREW,X2
142	LY31807-001A	SIDE BRACKET L
143	LY42722-003A	SCREW
144	LY31806-001A	SIDE BRACKET R
145	LY42722-003A	SCREW
148	LY31816-001A	BRACKET(MECHA)
149	LY42722-003A	SCREW,X2
150	LY31808-001A	CASS.HOUSING ASSY
151	LY42722-003A	SCREW,X4
152	LY30176-001A	CASS.COV.INSIDE
153	LY31956-001A	BRACKET(C.COV)
154	LY20645-001A	HOLDER(DSC P.),B,C,D
155	QYSLSF2060D	SCREW,B,C,D
156	LY42875-001A	FPC(DSC) ASSY,B,C,D
156A	LY42876-001A	S.SHEET(DSC FPC),B,C,D
157	YU40341	INSULATER,B,C,D

– OPTICAL BLOCK SECTION –

251	LY30948-003A	OP BLOCK ASSY
251A	PTY30948-002	FOCUS MOTOR
251B	PTY30948-321	ZOOM MOTOR
251C	PTY30151-016	SCREW,X9
251D	PTY30948-006	IRIS MOTOR UNIT,INCL.FPC
252	QYSPSGU2080Z	SCREW,X2
253	LY31441-001A	SPACER RUBBER
254	LY41757-001A	OPTICAL LPF
255	LY20346-001A	CCD SPACER
256	LY30018-072A	SPECIAL SCREW
257	LYH40018-006A	CCD BASE ASSY

MODEL	MARK
GR-SXM335U	A
GR-SXM730U	B
GR-SXM730UC	C
GR-SXM735U	D

5.3 ELECTRICAL PARTS LIST

#	⚠	REF No.	PART No.	PART NAME, DESCRIPTION
**********				

MAIN BOARD ASSEMBLY <01>

		PW	YB10310UY	MAIN BOARD ASSY,A
			YB10310UZ	MAIN BOARD ASSY,B,C
			YB10310VA	MAIN BOARD ASSY,D
		IC101	UPD703039-029	IC(MICRO C ROM)
			or UPD70F3040-029	IC(MICRO C ROM)
		IC102	TC7S86FU	IC(DIGITAL)
			or SN74AHC1G86K	IC
			or MC74VHC1G86DF	IC
		IC104	AT25080N-10SC-X	IC
			or X25170S8I-2.5-X	IC
			or 25LC080-I/SN-X	IC
		IC105	M62367GP	IC
		IC106	IC-PST9327U-X	IC
		IC107	RS5C314	IC
	⚠	IC1601	BD6630KV	IC
		IC1801	PIC-26043S	IR DETECT UNIT,B,C,D
		IC2001	MC74AC04DT	IC
		IC2401	NJM2149V-X	IC
		IC3001	JCY0130	IC
		IC3002	SN74AHC1G04K-X	IC
		IC3501	HA118224F	IC
		IC4001	JCY0149	IC
		IC4002	TMS4C2973-28-X	IC
		IC4003	UPD6467GR-506-X	IC(MICRO C ROM)
		IC4004	MM1385NN-X	IC
		IC4201	UPC358G2/5/-W	IC
		IC4202	BA10324AF-XE	IC
		IC4251	BA10358F-XE	IC
		IC4501	UPD16835G3	IC
		IC5201	HD49326BF	IC
		IC5202	JCY0098	IC
		IC6001	FA3698F	IC
		IC7001	CXD3518R	IC,D
		IC7002	MN5814	IC
		IC7005	BA4558F	IC,D
		IC7006	BA4558F	IC
		IC7007	TC7S04FU	IC(DIGITAL),A,D
			or MC74VHC1G04DF	IC,A,D
			or SN74AHC1G04K	IC,A,D
		IC7008	SN74LV4052APW	IC
		Q101	2SA1774/RS/-X	TRANSISTOR
		Q102	DTC144EE	TRANSISTOR
		Q103	2SC4617/QR/-X	TRANSISTOR
		Q104	DTC144EE	TRANSISTOR
		Q105	2SA1774/RS/-X	TRANSISTOR
		Q110	DTC144EE	TRANSISTOR
		Q111	DTC114EE	TRANSISTOR
		Q112	DTC114EE	TRANSISTOR
		Q113	2SC4097/QR/-X	TRANSISTOR
		Q2001	DTA114TE	TRANSISTOR
		Q2007	PUMX1	PAIR TRANSISTOR
			or UMX1N	PAIR TRANSISTOR
			or HN1C01FU/G/-X	PAIR TRANSISTOR
		Q2008	PUMT1	PAIR TRANSISTOR
			or HN1A01FU/G/-X	PAIR TRANSISTOR
		Q2021	DTC144EE	TRANSISTOR
		Q2022	DTC144EE	TRANSISTOR
		Q2023	2SC4617/QR/-X	TRANSISTOR
		Q2071	2SC4617/QR/-X	TRANSISTOR
		Q2401	DTC144EE	TRANSISTOR
		Q3002	PUMX1	PAIR TRANSISTOR
			or UMX1N	PAIR TRANSISTOR
			or HN1C01FU/G/-X	PAIR TRANSISTOR
		Q3003	2SC4097/QR/-X	TRANSISTOR
		Q3006	DTC144EE	TRANSISTOR
		Q3501	HN1C01FU/G/-X	PAIR TRANSISTOR
		Q3502	HN1C01FU/G/-X	PAIR TRANSISTOR
		Q3505	DTC144EE	TRANSISTOR
		Q3901	HN1A01FU/G/-X	PAIR TRANSISTOR
		Q4201	2SC4617/QR/-X	TRANSISTOR
		Q4251	RPM-22PB	PHOTO TRANSISTOR
		Q4501	DTC114EE	TRANSISTOR
		Q4701	PUMX1	PAIR TRANSISTOR
			or UMX1N	PAIR TRANSISTOR
			or HN1C01FU/G/-X	PAIR TRANSISTOR
		Q4702	2SC4617/QR/-X	TRANSISTOR
		Q4703	PUMX1	PAIR TRANSISTOR
			or UMX1N	PAIR TRANSISTOR
			or HN1C01FU/G/-X	PAIR TRANSISTOR
		Q4704	PUMT1	PAIR TRANSISTOR
			or HN1A01FU/G/-X	PAIR TRANSISTOR
		Q4705	2SC4617/QR/-X	TRANSISTOR
		Q4706	2SC4617/QR/-X	TRANSISTOR
		Q4707	2SC4617/QR/-X	TRANSISTOR
		Q4711	PUMX1	PAIR TRANSISTOR
			or HN1C01FU/G/-X	PAIR TRANSISTOR
			or UMX1N	PAIR TRANSISTOR
		Q4712	PUMT1	PAIR TRANSISTOR
			or HN1A01FU/G/-X	PAIR TRANSISTOR
		Q4713	PUMX1	PAIR TRANSISTOR
			or UMX1N	PAIR TRANSISTOR
			or HN1C01FU/G/-X	PAIR TRANSISTOR
		Q4714	PUMT1	PAIR TRANSISTOR
			or HN1A01FU/G/-X	PAIR TRANSISTOR
		Q4715	PUMX1	PAIR TRANSISTOR
			or HN1C01FU/G/-X	PAIR TRANSISTOR
			or UMX1N	PAIR TRANSISTOR
		Q6101	SSM6J07FU	MOS FET
		Q6201	SSM6J07FU	MOS FET
		Q6301	CPH3304	MOS FET
		Q6306	SSM3K02F	MOS FET
		Q6307	2SC4617/QR/-X	TRANSISTOR
		Q6308	CPH3101	TRANSISTOR
		Q6401	SSM6J07FU	MOS FET
		Q6501	SSM6J07FU	MOS FET
		Q6601	CPH3305	MOS FET
		Q6608	DTC144EE	TRANSISTOR
		Q6621	HN1C01FU/G/-X	PAIR TRANSISTOR
		Q6622	2SA1577/QR/-X	TRANSISTOR
		Q6701	FX802	TRANSISTOR
		Q6702	2SC4097/QR/-X	TRANSISTOR
		Q6801	2SA1577/QR/-X	TRANSISTOR
		Q6811	2SB1121/TU/-X	TRANSISTOR
		Q7001	PUMX1	PAIR TRANSISTOR,D
		Q7003	PUMX1	PAIR TRANSISTOR
		Q7005	PUMX1	PAIR TRANSISTOR,D
		Q7011	PUMX1	PAIR TRANSISTOR
		Q7013	PUMX1	PAIR TRANSISTOR

# ⚠	REF No.	PART No.	PART NAME, DESCRIPTION	
	Q7015	PUMX1	PAIR TRANSISTOR	
	Q7017	2SC4617/QR/-X	TRANSISTOR	
	Q7018	2SA1774/QR/-X	TRANSISTOR	
	Q7019	2SC4617/QR/-X	TRANSISTOR	
	Q7020	2SA1774/QR/-X	TRANSISTOR	
	Q7022	DTC144EE	TRANSISTOR,A,D	
⚠	D101	SB007W03Q	SB DIODE	
	D102	UDZS7.5B	ZENER DIODE	
	D105	1SS355	DIODE	
	D106	1SS355	DIODE	
	D107	SB007W03Q	SB DIODE	
	D3001	DAN222	DIODE	
	D5201	1SS355	DIODE	
	D6001	CRS03	SB DIODE	
	D6101	CRS03	SB DIODE	
	D6106	1SS357	SB DIODE	
	D6201	CRS03	SB DIODE	
	D6301	CRS03	SB DIODE	
	D6401	CRS03	SB DIODE	
	D6501	CRS03	SB DIODE	
	D6601	1SS383	SB DIODE	
	D6616	UDZS8.2B	ZENER DIODE	
	D7001	MA365	VARI CAP DIODE,D	
	D7002	MA365	VARI CAP DIODE	
	D7004	RB471E	SB DIODE	
	R101	NRSA63J-104X	MG RESISTOR	100kΩ,1/16W
⚠	R104	NRSA63J-102X	MG RESISTOR	1kΩ,1/16W
	R105	NRSA63J-103X	MG RESISTOR	10kΩ,1/16W
	R106	NRSA63J-561X	MG RESISTOR	560Ω,1/16W
	R107	NRVA63D-153X	CMF RESISTOR	15kΩ,1/16W
	R108	NRVA63D-243X	CMF RESISTOR	24kΩ,1/16W
	R109	NRVA63D-183X	CMF RESISTOR	18kΩ,1/16W
	R110	NRSA63J-103X	MG RESISTOR	10kΩ,1/16W
	R111	NRSA63J-273X	MG RESISTOR	27kΩ,1/16W
	R112	NRSA63J-331X	MG RESISTOR	330Ω,1/16W
	R113	NRSA63J-562X	MG RESISTOR	5.6kΩ,1/16W
	R114	NRSA63J-821X	MG RESISTOR	820Ω,1/16W
	R115	NRSA63J-101X	MG RESISTOR	100Ω,1/16W
	R116	NRSA63J-102X	MG RESISTOR	1kΩ,1/16W
	R118	NRSA63J-103X	MG RESISTOR	10kΩ,1/16W
	R119	NRSA63J-103X	MG RESISTOR	10kΩ,1/16W
	R120	NRSA63J-273X	MG RESISTOR	27kΩ,1/16W
	R121	NRSA63J-273X	MG RESISTOR	27kΩ,1/16W
	R122	NRSA63J-393X	MG RESISTOR	39kΩ,1/16W
	R123	NRSA63J-104X	MG RESISTOR	100kΩ,1/16W
	R124	NRSA63J-104X	MG RESISTOR	100kΩ,1/16W
	R125	NRSA63J-273X	MG RESISTOR	27kΩ,1/16W
	R126	NRSA63J-153X	MG RESISTOR	15kΩ,1/16W
	R127	NRSA63J-221X	MG RESISTOR	220Ω,1/16W
	R128	NRSA63J-102X	MG RESISTOR	1kΩ,1/16W
	R129	NRSA63J-102X	MG RESISTOR	1kΩ,1/16W
	R130	NRSA63J-105X	MG RESISTOR	1MΩ,1/16W
	R131	NRSA63J-105X	MG RESISTOR	1MΩ,1/16W
	R132	NRSA63J-105X	MG RESISTOR	1MΩ,1/16W
	R133	NRSA63J-105X	MG RESISTOR	1MΩ,1/16W
	R134	NRSA63J-105X	MG RESISTOR	1MΩ,1/16W
	R135	NRSA63J-104X	MG RESISTOR	100kΩ,1/16W
	R136	NRSA63J-474X	MG RESISTOR	470kΩ,1/16W
	R138	NRSA63J-333X	MG RESISTOR	33kΩ,1/16W
	R139	NRSA63J-104X	MG RESISTOR	100kΩ,1/16W
	R140	NRSA63J-753X	MG RESISTOR	75kΩ,1/16W

# ⚠	REF No.	PART No.	PART NAME, DESCRIPTION	
	R141	NRSA63J-334X	MG RESISTOR	330kΩ,1/16W
	R142	NRSA63J-103X	MG RESISTOR	10kΩ,1/16W
	R143	NRSA63J-105X	MG RESISTOR	1MΩ,1/16W
	R144	NRSA63J-221X	MG RESISTOR	220Ω,1/16W
	R145	NRSA63J-222X	MG RESISTOR	2.2kΩ,1/16W
	R146	NRSA63J-474X	MG RESISTOR	470kΩ,1/16W
	R147	NRSA63J-472X	MG RESISTOR	4.7kΩ,1/16W
	R148	NRSA63J-0R0X	MG RESISTOR	0Ω,1/16W
	R149	NRSA63J-104X	MG RESISTOR	100kΩ,1/16W
	R150	NRSA63J-222X	MG RESISTOR	2.2kΩ,1/16W
	R151	NRSA63J-222X	MG RESISTOR	2.2kΩ,1/16W
	R152	NRSA63J-474X	MG RESISTOR	470kΩ,1/16W
	R153	NRSA63J-474X	MG RESISTOR	470kΩ,1/16W
	R158	NRSA63J-474X	MG RESISTOR	470kΩ,1/16W
	R159	NRSA63J-474X	MG RESISTOR	470kΩ,1/16W
	R160	NRSA63J-474X	MG RESISTOR	470kΩ,1/16W
	R161	NRSA63J-104X	MG RESISTOR	100kΩ,1/16W
	R162	NRSA63J-472X	MG RESISTOR	4.7kΩ,1/16W
	R163	NRSA63J-221X	MG RESISTOR	220Ω,1/16W
	R164	NRSA63J-472X	MG RESISTOR	4.7kΩ,1/16W
	R166	NRSA63J-103X	MG RESISTOR	10kΩ,1/16W
	R167	NRSA63J-183X	MG RESISTOR	18kΩ,1/16W
	R168	NRSA63J-562X	MG RESISTOR	5.6kΩ,1/16W
	R170	NRSA63J-333X	MG RESISTOR	33kΩ,1/16W
	R171	NRSA63J-104X	MG RESISTOR	100kΩ,1/16W
	R172	NRSA63J-151X	MG RESISTOR	150Ω,1/16W
	R173	NRSA63J-0R0X	MG RESISTOR	0Ω,1/16W
	R174	NRSA63J-0R0X	MG RESISTOR	0Ω,1/16W
	R175	NRSA63J-105X	MG RESISTOR	1MΩ,1/16W
	R176	NRSA63J-221X	MG RESISTOR	220Ω,1/16W
	R180	NRSA63J-331X	MG RESISTOR	330Ω,1/16W
	R182	NRSA63J-222X	MG RESISTOR	2.2kΩ,1/16W
	R183	NRSA63J-222X	MG RESISTOR	2.2kΩ,1/16W
	R184	NRSA63J-222X	MG RESISTOR	2.2kΩ,1/16W
	R188	NRSA63J-222X	MG RESISTOR	2.2kΩ,1/16W
	R190	NRSA63J-331X	MG RESISTOR	330Ω,1/16W
	R191	NRSA63J-0R0X	MG RESISTOR	0Ω,1/16W
	R192	NRSA63J-105X	MG RESISTOR	1MΩ,1/16W
	R195	NRSA63J-0R0X	MG RESISTOR	0Ω,1/16W
	R1601	NRV142F-R33X	CMF RESISTOR	0.33Ω,1/4W
	R1602	NRV142F-R33X	CMF RESISTOR	0.33Ω,1/4W
	R1603	NRSA63J-154X	MG RESISTOR	150kΩ,1/16W
	R1604	NRSA63J-102X	MG RESISTOR	1kΩ,1/16W
	R1605	NRSA63J-102X	MG RESISTOR	1kΩ,1/16W
	R1606	NRSA63J-102X	MG RESISTOR	1kΩ,1/16W
	R1607	NRSA63J-104X	MG RESISTOR	100kΩ,1/16W
	R1608	NRSA63J-104X	MG RESISTOR	100kΩ,1/16W
	R1609	NRSA63J-333X	MG RESISTOR	33kΩ,1/16W
	R1610	NRSA63J-103X	MG RESISTOR	10kΩ,1/16W
	R1612	NRSA63J-392X	MG RESISTOR	3.9kΩ,1/16W
	R1613	NRSA63J-104X	MG RESISTOR	100kΩ,1/16W
	R1614	NRSA63J-333X	MG RESISTOR	33kΩ,1/16W
	R1615	NRSA63J-103X	MG RESISTOR	10kΩ,1/16W
	R1617	NRSA63J-183X	MG RESISTOR	18kΩ,1/16W
	R1618	NRSA63J-154X	MG RESISTOR	150kΩ,1/16W
	R1619	NRSA63J-471X	MG RESISTOR	470Ω,1/16W
	R1620	NRSA63J-684X	MG RESISTOR	680kΩ,1/16W
	R1621	NRSA63J-102X	MG RESISTOR	1kΩ,1/16W
	R1622	NRSA63J-224X	MG RESISTOR	220kΩ,1/16W
	R1623	NRSA63J-223X	MG RESISTOR	22kΩ,1/16W
	R1624	NRSA63J-104X	MG RESISTOR	100kΩ,1/16W

# ⚠	REF No.	PART No.	PART NAME, DESCRIPTION	
	R1625	NRSA63J-104X	MG RESISTOR	100kΩ,1/16W
	R1626	NRSA63J-104X	MG RESISTOR	100kΩ,1/16W
	R1628	NRSA63J-0R0X	MG RESISTOR	0Ω,1/16W
	R1629	NRSA63J-0R0X	MG RESISTOR	0Ω,1/16W
	R1630	NRSA63J-0R0X	MG RESISTOR	0Ω,1/16W
	R1631	NRSA63J-122X	MG RESISTOR	1.2kΩ,1/16W
	R1632	NRSA63J-153X	MG RESISTOR	15kΩ,1/16W
	R1633	NRSA63J-683X	MG RESISTOR	68kΩ,1/16W
	R2001	NRSA63J-104X	MG RESISTOR	100kΩ,1/16W
	R2002	NRSA63J-332X	MG RESISTOR	3.3kΩ,1/16W
	R2003	NRSA63J-102X	MG RESISTOR	1kΩ,1/16W
	R2004	NRSA63J-681X	MG RESISTOR	680Ω,1/16W
	R2005	NRSA63J-272X	MG RESISTOR	2.7kΩ,1/16W
	R2006	NRSA63J-102X	MG RESISTOR	1kΩ,1/16W
	R2011	NRSA63J-101X	MG RESISTOR	100Ω,1/16W
	R2012	NRSA63J-101X	MG RESISTOR	100Ω,1/16W
	R2021	NRSA63J-103X	MG RESISTOR	10kΩ,1/16W
	R2022	NRSA63J-334X	MG RESISTOR	330kΩ,1/16W
	R2023	NRSA63J-151X	MG RESISTOR	150Ω,1/16W
	R2024	NRVA63D-133X	CMF RESISTOR	13kΩ,1/16W
	R2025	NRSA63J-823X	MG RESISTOR	82kΩ,1/16W
	R2026	NRSA63J-0R0X	MG RESISTOR	0Ω,1/16W
	R2027	NRSA63J-102X	MG RESISTOR	1kΩ,1/16W
	R2028	NRSA63J-102X	MG RESISTOR	1kΩ,1/16W
	R2030	NRSA63J-104X	MG RESISTOR	100kΩ,1/16W
	R2031	NRSA63J-332X	MG RESISTOR	3.3kΩ,1/16W
	R2032	NRSA63J-270X	MG RESISTOR	27Ω,1/16W
	R2051	NRSA63J-102X	MG RESISTOR	1kΩ,1/16W
	R2071	NRSA63J-473X	MG RESISTOR	47kΩ,1/16W
	R2072	NRSA63J-562X	MG RESISTOR	5.6kΩ,1/16W
	R2401	NRSA63J-392X	MG RESISTOR	3.9kΩ,1/16W
	R2402	NRSA63J-332X	MG RESISTOR	3.3kΩ,1/16W
	R2403	NRSA63J-103X	MG RESISTOR	10kΩ,1/16W
	R3001	NRSA63J-105X	MG RESISTOR	1MΩ,1/16W
	R3002	NRVA63D-471X	CMF RESISTOR	470Ω,1/16W
	R3004	NRVA63D-273X	CMF RESISTOR	27kΩ,1/16W
	R3006	NRVA63D-561X	CMF RESISTOR	560Ω,1/16W
	R3007	NRVA63D-153X	CMF RESISTOR	15kΩ,1/16W
	R3008	NRSA63J-393X	MG RESISTOR	39kΩ,1/16W
	R3009	NRSA63J-272X	MG RESISTOR	2.7kΩ,1/16W
	R3010	NRSA63J-332X	MG RESISTOR	3.3kΩ,1/16W
	R3014	NRSA63J-681X	MG RESISTOR	680Ω,1/16W
	R3015	NRSA63J-332X	MG RESISTOR	3.3kΩ,1/16W
	R3016	NRSA63J-332X	MG RESISTOR	3.3kΩ,1/16W
	R3018	NRSA63J-271X	MG RESISTOR	270Ω,1/16W
	R3023	NRSA63J-331X	MG RESISTOR	330Ω,1/16W
	R3027	NRSA63J-103X	MG RESISTOR	10kΩ,1/16W
	R3028	NRVA63D-472X	CMF RESISTOR	4.7kΩ,1/16W
	R3029	NRSA63J-0R0X	MG RESISTOR	0Ω,1/16W
	R3030	NRSA63J-561X	MG RESISTOR	560Ω,1/16W
	R3034	NRSA63J-220X	MG RESISTOR	22Ω,1/16W
	R3038	NRSA63J-392X	MG RESISTOR	3.9kΩ,1/16W
	R3501	NRSA63J-0R0X	MG RESISTOR	0Ω,1/16W
	R3502	NRSA63J-102X	MG RESISTOR	1kΩ,1/16W
	R3504	NRSA63J-102X	MG RESISTOR	1kΩ,1/16W
	R3505	NRSA63J-102X	MG RESISTOR	1kΩ,1/16W
	R3506	NRSA63J-102X	MG RESISTOR	1kΩ,1/16W
	R3507	NRSA63J-0R0X	MG RESISTOR	0Ω,1/16W
	R3508	NRSA63J-153X	MG RESISTOR	15kΩ,1/16W
	R3901	NRSA63J-100X	MG RESISTOR	10Ω,1/16W
	R3902	NRSA63J-101X	MG RESISTOR	100Ω,1/16W
	R3903	NRSA63J-182X	MG RESISTOR	1.8kΩ,1/16W
	R4001	NRSA63J-113X	MG RESISTOR	11kΩ,1/16W
	R4002	NRSA63J-123X	MG RESISTOR	12kΩ,1/16W
	R4003	NRSA63J-153X	MG RESISTOR	15kΩ,1/16W
	R4004	NRSA63J-103X	MG RESISTOR	10kΩ,1/16W
	R4006	NRVA63D-103X	CMF RESISTOR	10kΩ,1/16W
	R4007	NRVA63D-432X	CMF RESISTOR	4.3kΩ,1/16W
	R4008	NRVA63D-272X	CMF RESISTOR	2.7kΩ,1/16W
	R4009	NRVA63D-152X	CMF RESISTOR	1.5kΩ,1/16W
	R4010	NRVA63D-122X	CMF RESISTOR	1.2kΩ,1/16W
	R4035	NRSA63J-0R0X	MG RESISTOR	0Ω,1/16W
	R4037	NRSA63J-102X	MG RESISTOR	1kΩ,1/16W
	R4038	NRSA63J-101X	MG RESISTOR,B,C,D	100Ω,1/16W
	R4201	NRSA63J-103X	MG RESISTOR	10kΩ,1/16W
	R4202	NRSA63J-563X	MG RESISTOR	56kΩ,1/16W
	R4203	NRSA63J-103X	MG RESISTOR	10kΩ,1/16W
	R4204	NRSA63J-331X	MG RESISTOR	330Ω,1/16W
	R4205	NRSA63J-105X	MG RESISTOR	1MΩ,1/16W
	R4206	NRSA63J-103X	MG RESISTOR	10kΩ,1/16W
	R4207	NRSA63J-104X	MG RESISTOR	100kΩ,1/16W
	R4208	NRSA63J-472X	MG RESISTOR	4.7kΩ,1/16W
	R4209	NRSA63J-104X	MG RESISTOR	100kΩ,1/16W
	R4210	NRSA63J-105X	MG RESISTOR	1MΩ,1/16W
	R4211	NRSA63J-243X	MG RESISTOR	24kΩ,1/16W
	R4214	NRSA63J-472X	MG RESISTOR	4.7kΩ,1/16W
	R4215	NRSA63J-683X	MG RESISTOR	68kΩ,1/16W
	R4216	NRSA63J-103X	MG RESISTOR	10kΩ,1/16W
	R4217	NRSA63J-102X	MG RESISTOR	1kΩ,1/16W
	R4218	NRSA63J-102X	MG RESISTOR	1kΩ,1/16W
	R4219	NRSA63J-104X	MG RESISTOR	100kΩ,1/16W
	R4220	NRSA63J-152X	MG RESISTOR	1.5kΩ,1/16W
	R4221	NRSA63J-334X	MG RESISTOR	330kΩ,1/16W
	R4222	NRSA63J-154X	MG RESISTOR	150kΩ,1/16W
	R4223	NRSA63J-333X	MG RESISTOR	33kΩ,1/16W
	R4224	NRSA63J-223X	MG RESISTOR	22kΩ,1/16W
	R4251	NRSA63J-182X	MG RESISTOR	1.8kΩ,1/16W
	R4252	NRSA63J-103X	MG RESISTOR	10kΩ,1/16W
	R4253	NRSA63J-103X	MG RESISTOR	10kΩ,1/16W
	R4254	NRSA63J-684X	MG RESISTOR	680kΩ,1/16W
	R4255	NRSA63J-222X	MG RESISTOR	2.2kΩ,1/16W
	R4256	NRSA63J-824X	MG RESISTOR	820kΩ,1/16W
	R4257	NRSA63J-822X	MG RESISTOR	8.2kΩ,1/16W
	R4258	NRSA63J-104X	MG RESISTOR	100kΩ,1/16W
	R4259	NRSA63J-683X	MG RESISTOR	68kΩ,1/16W
	R4262	NRSA63J-302X	MG RESISTOR	3kΩ,1/16W
⚠	R4501	NRSA63J-6R8X	MG RESISTOR	6.8Ω,1/16W
⚠	R4502	NRSA63J-6R8X	MG RESISTOR	6.8Ω,1/16W
⚠	R4503	NRSA63J-6R8X	MG RESISTOR	6.8Ω,1/16W
⚠	R4504	NRSA63J-6R8X	MG RESISTOR	6.8Ω,1/16W
	R4505	NRSA63J-271X	MG RESISTOR	270Ω,1/16W
	R4507	NRSA63J-103X	MG RESISTOR	10kΩ,1/16W
	R4508	NRSA63J-103X	MG RESISTOR	10kΩ,1/16W
	R4514	NRSA63J-223X	MG RESISTOR	22kΩ,1/16W
	R4515	NRSA63J-182X	MG RESISTOR	1.8kΩ,1/16W
	R4702	NRSA63J-820X	MG RESISTOR	82Ω,1/16W
	R4703	NRVA63D-561X	CMF RESISTOR	560Ω,1/16W
	R4704	NRVA63D-272X	CMF RESISTOR	2.7kΩ,1/16W
	R4705	NRVA63D-562X	CMF RESISTOR	5.6kΩ,1/16W
	R4706	NRSA63J-681X	MG RESISTOR	680Ω,1/16W
	R4707	NRSA63J-122X	MG RESISTOR	1.2kΩ,1/16W
	R4708	NRSA63J-104X	MG RESISTOR	100kΩ,1/16W

# ⚠ REF No.	PART No.	PART NAME, DESCRIPTION	
R4709	NRSA63J-332X	MG RESISTOR	3.3kΩ,1/16W
R4710	NRSA63J-332X	MG RESISTOR	3.3kΩ,1/16W
R4711	NRSA63J-121X	MG RESISTOR	120Ω,1/16W
R4712	NRVA63D-561X	CMF RESISTOR	560Ω,1/16W
R4713	NRSA63J-681X	MG RESISTOR	680Ω,1/16W
R4714	NRSA63J-122X	MG RESISTOR	1.2kΩ,1/16W
R4715	NRSA63J-0R0X	MG RESISTOR	0Ω,1/16W
R4716	NRVA63D-511X	CMF RESISTOR	510Ω,1/16W
R4717	NRVA63D-222X	CMF RESISTOR	2.2kΩ,1/16W
R4718	NRSA63J-104X	MG RESISTOR	100kΩ,1/16W
R4719	NRSA63J-222X	MG RESISTOR	2.2kΩ,1/16W
R4721	NRVA63D-680X	CMF RESISTOR	68Ω,1/16W
R4722	NRVA63D-680X	CMF RESISTOR	68Ω,1/16W
R4723	NRVA63D-680X	CMF RESISTOR	68Ω,1/16W
R4735	NRSA63J-332X	MG RESISTOR	3.3kΩ,1/16W
R4736	NRSA63J-332X	MG RESISTOR	3.3kΩ,1/16W
R4737	NRSA63J-104X	MG RESISTOR	100kΩ,1/16W
R4738	NRSA63J-332X	MG RESISTOR	3.3kΩ,1/16W
R4739	NRSA63J-332X	MG RESISTOR	3.3kΩ,1/16W
R4741	NRVA63D-152X	CMF RESISTOR	1.5kΩ,1/16W
R4743	NRVA63D-223X	CMF RESISTOR	22kΩ,1/16W
R4744	NRVA63D-222X	CMF RESISTOR	2.2kΩ,1/16W
R4745	NRVA63D-681X	CMF RESISTOR	680Ω,1/16W
R4746	NRVA63D-222X	CMF RESISTOR	2.2kΩ,1/16W
R4747	NRVA63D-681X	CMF RESISTOR	680Ω,1/16W
R5201	NRSA63J-243X	MG RESISTOR	24kΩ,1/16W
R5202	NRSA63J-220X	MG RESISTOR	22Ω,1/16W
R5204	NRSA63J-0R0X	MG RESISTOR	0Ω,1/16W
R5212	NRSA63J-101X	MG RESISTOR	100Ω,1/16W
R5213	NRSA63J-101X	MG RESISTOR	100Ω,1/16W
R5214	NRSA63J-101X	MG RESISTOR	100Ω,1/16W
R5215	NRSA63J-104X	MG RESISTOR	100kΩ,1/16W
R5216	NRSA63J-100X	MG RESISTOR	10Ω,1/16W
R5217	NRSA63J-104X	MG RESISTOR	100kΩ,1/16W
R5218	NRSA63J-0R0X	MG RESISTOR	0Ω,1/16W
R5220	NRSA63J-0R0X	MG RESISTOR	0Ω,1/16W
R6001	NRSA63J-104X	MG RESISTOR	100kΩ,1/16W
R6002	NRSA63J-333X	MG RESISTOR	33kΩ,1/16W
R6003	NRVA63D-912X	CMF RESISTOR	9.1kΩ,1/16W
R6004	NRVA63D-471X	CMF RESISTOR	470Ω,1/16W
R6005	NRVA63D-183X	CMF RESISTOR	18kΩ,1/16W
R6006	NRSA63J-472X	MG RESISTOR	4.7kΩ,1/16W
R6008	NRVA63D-183X	CMF RESISTOR	18kΩ,1/16W
R6009	NRSA63J-224X	MG RESISTOR	220kΩ,1/16W
R6010	NRSA63J-473X	MG RESISTOR	47kΩ,1/16W
R6011	NRSA63J-473X	MG RESISTOR	47kΩ,1/16W
R6012	NRSA63J-103X	MG RESISTOR	10kΩ,1/16W
R6015	NRSA63J-104X	MG RESISTOR	100kΩ,1/16W
R6016	NRSA63J-104X	MG RESISTOR	100kΩ,1/16W
R6019	NRSA63J-222X	MG RESISTOR	2.2kΩ,1/16W
R6020	NRSA63J-224X	MG RESISTOR	220kΩ,1/16W
R6021	NRSA63J-102X	MG RESISTOR	1kΩ,1/16W
R6022	NRSA63J-102X	MG RESISTOR	1kΩ,1/16W
R6023	NRSA63J-102X	MG RESISTOR	1kΩ,1/16W
R6103	NRVA63D-223X	CMF RESISTOR	22kΩ,1/16W
R6104	NRVA63D-103X	CMF RESISTOR	10kΩ,1/16W
R6203	NRVA63D-103X	CMF RESISTOR	10kΩ,1/16W
R6204	NRVA63D-103X	CMF RESISTOR	10kΩ,1/16W
R6303	NRVA63D-183X	CMF RESISTOR	18kΩ,1/16W
R6304	NRVA63D-472X	CMF RESISTOR	4.7kΩ,1/16W
R6306	NRS12BK-R47W	MG RESISTOR	0.47Ω,1/2W

# ⚠ REF No.	PART No.	PART NAME, DESCRIPTION	
R6307	NRSA63J-104X	MG RESISTOR	100kΩ,1/16W
R6309	NRSA63J-103X	MG RESISTOR	10kΩ,1/16W
R6310	NRSA63J-152X	MG RESISTOR	1.5kΩ,1/16W
R6311	NRSA63J-473X	MG RESISTOR	47kΩ,1/16W
R6403	NRSA63J-473X	MG RESISTOR	47kΩ,1/16W
R6404	NRSA63J-302X	MG RESISTOR	3kΩ,1/16W
R6406	NRSA63J-183X	MG RESISTOR	18kΩ,1/16W
R6407	NRSA63J-823X	MG RESISTOR	82kΩ,1/16W
R6503	NRSA63J-243X	MG RESISTOR	24kΩ,1/16W
R6504	NRSA63J-332X	MG RESISTOR	3.3kΩ,1/16W
R6506	NRSA63J-223X	MG RESISTOR	22kΩ,1/16W
R6507	NRSA63J-823X	MG RESISTOR	82kΩ,1/16W
R6603	NRVA63D-683X	CMF RESISTOR	68kΩ,1/16W
R6604	NRVA63D-392X	CMF RESISTOR	3.9kΩ,1/16W
R6605	NRSA63J-274X	MG RESISTOR	270kΩ,1/16W
R6606	NRSA63J-272X	MG RESISTOR	2.7kΩ,1/16W
R6612	NRSA63J-823X	MG RESISTOR	82kΩ,1/16W
R6613	NRSA63J-104X	MG RESISTOR	100kΩ,1/16W
R6614	NRSA63J-472X	MG RESISTOR	4.7kΩ,1/16W
R6616	NRSA63J-102X	MG RESISTOR	1kΩ,1/16W
R6622	NRVA63D-104X	CMF RESISTOR	100kΩ,1/16W
R6623	NRVA63D-473X	CMF RESISTOR	47kΩ,1/16W
R6624	NRSA63J-273X	MG RESISTOR	27kΩ,1/16W
R6625	NRSA63J-822X	MG RESISTOR	8.2kΩ,1/16W
R6626	NRVA63D-563X	CMF RESISTOR	56kΩ,1/16W
R6627	NRVA63D-363X	CMF RESISTOR	36kΩ,1/16W
R6701	NRSA63J-680X	MG RESISTOR	68Ω,1/16W
R6702	NRSA63J-221X	MG RESISTOR	220Ω,1/16W
R6704	NRVA63D-472X	CMF RESISTOR	4.7kΩ,1/16W
R6706	NRZ0058-R20X	MG RESISTOR	0.2Ω,1/2W
R6707	NRS016J-121X	MG RESISTOR	120Ω,1W
R6708	NRS016J-121X	MG RESISTOR	120Ω,1W
R6709	NRS016J-121X	MG RESISTOR	120Ω,1W
R6710	NRVA63D-823X	CMF RESISTOR	82kΩ,1/16W
R6711	NRVA63D-333X	CMF RESISTOR	33kΩ,1/16W
R6712	NRSA63J-222X	MG RESISTOR	2.2kΩ,1/16W
R6713	NRSA63J-562X	MG RESISTOR	5.6kΩ,1/16W
R6801	NRSA63J-102X	MG RESISTOR	1kΩ,1/16W
R6803	NRVA63D-223X	CMF RESISTOR	22kΩ,1/16W
R6804	NRVA63D-103X	CMF RESISTOR	10kΩ,1/16W
R6810	NRSA63J-0R0X	MG RESISTOR	0Ω,1/16W
R6811	NRSA63J-102X	MG RESISTOR	1kΩ,1/16W
R6813	NRVA63D-104X	CMF RESISTOR	100kΩ,1/16W
R6814	NRVA63D-683X	CMF RESISTOR	68kΩ,1/16W
R6820	NRSA63J-102X	MG RESISTOR	1kΩ,1/16W
R6961	NRSA63J-223X	MG RESISTOR	22kΩ,1/16W
R7002	NRSA63J-102X	MG RESISTOR,D	1kΩ,1/16W
R7003	NRSA63J-103X	MG RESISTOR,D	10kΩ,1/16W
R7004	NRSA63J-333X	MG RESISTOR,D	33kΩ,1/16W
R7005	NRSA63J-103X	MG RESISTOR,D	10kΩ,1/16W
R7007	NRVA63D-473X	CMF RESISTOR,D	47kΩ,1/16W
R7008	NRVA63D-913X	CMF RESISTOR,D	91kΩ,1/16W
R7009	NRSA63J-0R0X	MG RESISTOR,D	0Ω,1/16W
R7021	NRSA63J-0R0X	MG RESISTOR	0Ω,1/16W
R7029	NRSA63J-0R0X	MG RESISTOR	0Ω,1/16W
R7031	NRSA63J-474X	MG RESISTOR	470kΩ,1/16W
R7032	NRSA63J-223X	MG RESISTOR	22kΩ,1/16W
R7033	NRSA63J-104X	MG RESISTOR	100kΩ,1/16W
R7035	NRSA63J-103X	MG RESISTOR	10kΩ,1/16W
R7040	NRVA63D-333X	CMF RESISTOR	33kΩ,1/16W
R7042	NRVA63D-123X	CMF RESISTOR	12kΩ,1/16W

# ⚠	REF No.	PART No.	PART NAME, DESCRIPTION	
	R7043	NRVA63D-123X	CMF RESISTOR	12kΩ,1/16W
	R7044	NRVA63D-432X	CMF RESISTOR,B,C	4.3kΩ,1/16W
		NRVA63D-752X	CMF RESISTOR,A,D	7.5kΩ,1/16W
	R7045	NRVA63D-103X	CMF RESISTOR	10kΩ,1/16W
	R7046	NRSA63J-103X	MG RESISTOR,A,D	10kΩ,1/16W
	R7049	NRSA63J-680X	MG RESISTOR	68Ω,1/16W
	R7050	NRSA63J-680X	MG RESISTOR	68Ω,1/16W
	R7051	NRSA63J-680X	MG RESISTOR	68Ω,1/16W
	R7058	NRSA63J-0R0X	MG RESISTOR	0Ω,1/16W
	R7061	NRVA63D-183X	CMF RESISTOR,D	18kΩ,1/16W
	R7062	NRVA63D-334X	CMF RESISTOR,D	330kΩ,1/16W
	R7067	NRSA63J-223X	MG RESISTOR,A,D	22kΩ,1/16W
		NRSA63J-682X	MG RESISTOR,B,C	6.8kΩ,1/16W
	R7068	NRSA63J-223X	MG RESISTOR	22kΩ,1/16W
	R7069	NRSA63J-223X	MG RESISTOR	22kΩ,1/16W
	R7070	NRSA63J-223X	MG RESISTOR	22kΩ,1/16W
	R7071	NRSA63J-223X	MG RESISTOR	22kΩ,1/16W
	R7072	NRSA02J-122X	MG RESISTOR,B,C	1.2kΩ,1/10W
		NRSA02J-182X	MG RESISTOR,A,D	1.8kΩ,1/10W
	R7073	NRSA02J-331X	MG RESISTOR,A,D	330Ω,1/10W
		NRSA02J-821X	MG RESISTOR,B,C	820Ω,1/10W
	R7074	NRSA63J-103X	MG RESISTOR	10kΩ,1/16W
	R7077	NRVA63D-682X	CMF RESISTOR	6.8kΩ,1/16W
	R7078	NRVA63D-822X	CMF RESISTOR,D	8.2kΩ,1/16W
	R7079	NRSA63J-0R0X	MG RESISTOR,D	0Ω,1/16W
	R7083	NRSA63J-105X	MG RESISTOR	1MΩ,1/16W
	R7085	NRVA63D-822X	CMF RESISTOR,D	8.2kΩ,1/16W
	R7086	NRVA63D-123X	CMF RESISTOR	12kΩ,1/16W
	R7088	NRVA63D-223X	CMF RESISTOR,D	22kΩ,1/16W
	R7090	NRVA63D-822X	CMF RESISTOR,D	8.2kΩ,1/16W
	R7091	NRVA63D-123X	CMF RESISTOR	12kΩ,1/16W
	R7093	NRVA63D-223X	CMF RESISTOR	22kΩ,1/16W
	R7095	NRVA63D-822X	CMF RESISTOR,D	8.2kΩ,1/16W
	R7096	NRVA63D-123X	CMF RESISTOR	12kΩ,1/16W
	R7098	NRVA63D-223X	CMF RESISTOR,D	22kΩ,1/16W
	R7099	NRVA63D-103X	CMF RESISTOR,D	10kΩ,1/16W
	R7100	NRVA63D-103X	CMF RESISTOR,D	10kΩ,1/16W
	R7101	NRVA63D-103X	CMF RESISTOR,D	10kΩ,1/16W
	R7102	NRVA63D-103X	CMF RESISTOR,D	10kΩ,1/16W
	R7103	NRVA63D-103X	CMF RESISTOR,D	10kΩ,1/16W
	R7110	NRSA63J-105X	MG RESISTOR	1MΩ,1/16W
	R7112	NRVA63D-332X	CMF RESISTOR	3.3kΩ,1/16W
	R7114	NRVA63D-223X	CMF RESISTOR	22kΩ,1/16W
	R7116	NRVA63D-332X	CMF RESISTOR	3.3kΩ,1/16W
	R7118	NRVA63D-223X	CMF RESISTOR	22kΩ,1/16W
	R7120	NRVA63D-332X	CMF RESISTOR	3.3kΩ,1/16W
	R7122	NRVA63D-223X	CMF RESISTOR	22kΩ,1/16W
	R7124	NRVA63D-103X	CMF RESISTOR	10kΩ,1/16W
	R7127	NRVA63D-103X	CMF RESISTOR	10kΩ,1/16W
	R7128	NRVA63D-103X	CMF RESISTOR	10kΩ,1/16W
	R7129	NRVA63D-103X	CMF RESISTOR	10kΩ,1/16W
	R7130	NRVA63D-103X	CMF RESISTOR	10kΩ,1/16W
	R7131	NRVA63D-103X	CMF RESISTOR	10kΩ,1/16W
	R7132	NRVA63D-103X	CMF RESISTOR	10kΩ,1/16W
	R7139	NRVA63D-911X	CMF RESISTOR,A,B,C	910Ω,1/16W
	R7142	NRSA63J-0R0X	MG RESISTOR,B,C	0Ω,1/16W
	R7143	NRSA63J-0R0X	MG RESISTOR,A,D	0Ω,1/16W
	R7212	NRSA63J-0R0X	MG RESISTOR	0Ω,1/16W
	R7213	NRSA63J-0R0X	MG RESISTOR	0Ω,1/16W
	RA101	NRZ0038-222X	NET RESISTOR	
	RA102	NRZ0038-222X	NET RESISTOR	
	RA103	NRZ0038-222X	NET RESISTOR	
	RA104	NRZ0038-222X	NET RESISTOR	
	RA105	NRZ0038-473X	NET RESISTOR	
	RA106	NRZ0037-331X	NET RESISTOR	
	RA107	NRZ0034-102W	NET RESISTOR	
	RA108	NRZ0034-102W	NET RESISTOR	
	RA109	NRZ0038-474X	NET RESISTOR	
	RA4001	NRZ0034-100W	NET RESISTOR,B,C,D	
	RA4002	NRZ0034-100W	NET RESISTOR,B,C,D	
	RA4003	NRZ0034-100W	NET RESISTOR,B,C,D	
	C102	NCF31EZ-104X	CAPACITOR	0.1μF,25V
	C103	NBE41AM-106X	T CAPACITOR	10μF,10V
	C104	NCB31EK-103X	CAPACITOR	0.01μF,25V
	C105	NCB21CK-224X	CAPACITOR	0.22μF,16V
	C106	NCF31EZ-104X	CAPACITOR	0.1μF,25V
	C107	NCB31EK-103X	CAPACITOR	0.01μF,25V
	C108	NBE21AM-225X	T CAPACITOR	2.2μF,10V
	C109	NBE41AM-106X	T CAPACITOR	10μF,10V
	C110	NDC31HJ-101X	CAPACITOR	100pF,50V
	C111	NEA70JM-226X	E CAPACITOR	22μF,6.3V
	C112	NEA70JM-226X	E CAPACITOR	22μF,6.3V
	C113	NCB31EK-103X	CAPACITOR	0.01μF,25V
	C114	NCB31EK-103X	CAPACITOR	0.01μF,25V
	C115	NCF31EZ-104X	CAPACITOR	0.1μF,25V
	C116	NCB31EK-103X	CAPACITOR	0.01μF,25V
	C118	NCF31EZ-104X	CAPACITOR	0.1μF,25V
	C119	NCB31EK-103X	CAPACITOR	0.01μF,25V
	C120	NCB31EK-103X	CAPACITOR	0.01μF,25V
	C121	NCF31EZ-104X	CAPACITOR	0.1μF,25V
	C122	NCF31EZ-104X	CAPACITOR	0.1μF,25V
	C123	NDC31HJ-100X	CAPACITOR	10pF,50V
	C124	NDC31HJ-100X	CAPACITOR	10pF,50V
	C125	NCB31EK-103X	CAPACITOR	0.01μF,25V
	C126	NDC31HJ-120X	CAPACITOR	12pF,50V
	C127	NCB31CK-333X	CAPACITOR	0.033μF,16V
	C128	NCB21CK-474X	CAPACITOR	0.47μF,16V
	C129	NCB31CK-333X	CAPACITOR	0.033μF,16V
	C131	NCF31EZ-104X	CAPACITOR	0.1μF,25V
	C132	NCF31EZ-104X	CAPACITOR	0.1μF,25V
	C133	NCF31EZ-104X	CAPACITOR	0.1μF,25V
	C134	NCF31EZ-104X	CAPACITOR	0.1μF,25V
	C1201	NCB31HK-102X	CAPACITOR	0.001μF,50V
	C1202	NBE20JM-106X	T CAPACITOR	10μF,6.3V
	C1205	NCB31EK-153X	CAPACITOR	0.015μF,25V
	C1206	NBE20JM-106X	T CAPACITOR	10μF,6.3V
	C1601	NCB31EK-103X	CAPACITOR	0.01μF,25V
	C1602	NCB21CK-224X	CAPACITOR	0.22μF,16V
	C1603	NCB31CK-223X	CAPACITOR	0.022μF,16V
	C1604	NCB31CK-223X	CAPACITOR	0.022μF,16V
	C1605	NCB31CK-223X	CAPACITOR	0.022μF,16V
	C1606	NCB31CK-104X	CAPACITOR	0.1μF,16V
	C1607	NCB31CK-104X	CAPACITOR	0.1μF,16V
	C1608	NCB31CK-683X	CAPACITOR	0.068μF,16V
	C1609	NCB31CK-104X	CAPACITOR	0.1μF,16V
	C1610	NCB31CK-104X	CAPACITOR	0.1μF,16V
	C1611	NCB31CK-104X	CAPACITOR	0.1μF,16V
	C1612	NDC31HJ-331X	CAPACITOR	330pF,50V
	C1613	NCB21CK-334X	CAPACITOR	0.33μF,16V
	C1614	NBE41AM-226X	T CAPACITOR	22μF,10V
	C1615	NCB31HK-681X	CAPACITOR	680pF,50V
	C1616	NCB21CK-474X	CAPACITOR	0.47μF,16V

# ⚠ REF No.	PART No.	PART NAME, DESCRIPTION	
C1617	NCB31HK-152X	CAPACITOR	0.0015µF,50V
C1618	NBE21AM-106X	T CAPACITOR	10µF,10V
C1619	NCB31CK-223X	CAPACITOR	0.022µF,16V
C1621	NBP41CM-106X	T CAPACITOR	10µF,16V
C2001	NBE20JM-106X	T CAPACITOR	10µF,6.3V
C2002	NFV41HJ-183X	MPPS CAPACITOR	0.018µF,50V
C2003	NDC31HJ-331X	CAPACITOR	330pF,50V
C2004	NBE20JM-226X	T CAPACITOR	22µF,6.3V
C2005	NCB21CK-105X	CAPACITOR	1µF,16V
C2021	NCB31EK-682X	CAPACITOR	0.0068µF,25V
C2022	NBE20JM-106X	T CAPACITOR	10µF,6.3V
C2023	NBP21CM-105X	T CAPACITOR	1µF,16V
C2024	NCB31HK-122X	CAPACITOR	0.0012µF,50V
C2025	NCB30JK-105X	CAPACITOR	1µF,6.3V
C2026	NCB31HK-222X	CAPACITOR	0.0022µF,50V
C2027	NCB30JK-474X	CAPACITOR	0.47µF,6.3V
C2028	NCB30JK-105X	CAPACITOR	1µF,6.3V
C2029	NCB30JK-105X	CAPACITOR	1µF,6.3V
C2031	NCB31CK-104X	CAPACITOR	0.1µF,16V
C2032	NCB31HK-472X	CAPACITOR	0.0047µF,50V
C2033	NBE20JM-475X	T CAPACITOR	4.7µF,6.3V
C2034	NCB31CK-104X	CAPACITOR	0.1µF,16V
C2035	NBE20JM-226X	T CAPACITOR	22µF,6.3V
C2036	NBE20JM-106X	T CAPACITOR	10µF,6.3V
C2037	NBE20JM-226X	T CAPACITOR	22µF,6.3V
C2038	NCB30JK-474X	CAPACITOR	0.47µF,6.3V
C2051	NCB31EK-103X	CAPACITOR	0.01µF,25V
C2071	NBE20JM-106X	T CAPACITOR	10µF,6.3V
C2072	NCB31HK-222X	CAPACITOR	0.0022µF,50V
C2401	NEA70GM-476X	E CAPACITOR	47µF,4.0V
C2402	NCB30JK-105X	CAPACITOR	1µF,6.3V
C2403	NBE20JM-475X	T CAPACITOR	4.7µF,6.3V
C2404	NCF31EZ-104X	CAPACITOR	0.1µF,25V
C3002	NCB21CK-105X	CAPACITOR	1µF,16V
C3003	NCB21CK-105X	CAPACITOR	1µF,16V
C3004	NCF31EZ-104X	CAPACITOR	0.1µF,25V
C3005	NCF31EZ-104X	CAPACITOR	0.1µF,25V
C3006	NDC31HG-100X	CAPACITOR	10pF,50V
C3007	NDC31HG-100X	CAPACITOR	10pF,50V
C3009	NCF31EZ-104X	CAPACITOR	0.1µF,25V
C3011	NCF31EZ-104X	CAPACITOR	0.1µF,25V
C3012	NCF31EZ-104X	CAPACITOR	0.1µF,25V
C3013	NCF31EZ-104X	CAPACITOR	0.1µF,25V
C3014	NCF31EZ-104X	CAPACITOR	0.1µF,25V
C3015	NCF31EZ-104X	CAPACITOR	0.1µF,25V
C3017	NCF31EZ-104X	CAPACITOR	0.1µF,25V
C3019	NCB31EK-103X	CAPACITOR	0.01µF,25V
C3020	NCB31EK-103X	CAPACITOR	0.01µF,25V
C3027	NCB31EK-103X	CAPACITOR	0.01µF,25V
C3028	NCB31EK-103X	CAPACITOR	0.01µF,25V
C3033	NCB31CK-104X	CAPACITOR	0.1µF,16V
C3037	NDC31HJ-100X	CAPACITOR	10pF,50V
C3506	NCB31EK-103X	CAPACITOR	0.01µF,25V
C3507	NCB31EK-103X	CAPACITOR	0.01µF,25V
C3508	NCB31EK-103X	CAPACITOR	0.01µF,25V
C3510	NCB31CK-104X	CAPACITOR	0.1µF,16V
C3512	NCB10JK-106X	CAPACITOR	10µF,6.3V
C3513	NCB31CK-223X	CAPACITOR	0.022µF,16V
C3514	NCB21CK-105X	CAPACITOR	1µF,16V
C3515	NCB31EK-103X	CAPACITOR	0.01µF,25V
C3902	NCB31EK-103X	CAPACITOR	0.01µF,25V

# ⚠ REF No.	PART No.	PART NAME, DESCRIPTION	
C3903	NDC31HJ-3R0X	CAPACITOR	3pF,50V
C4006	NCF31EZ-104X	CAPACITOR	0.1µF,25V
C4008	NCF31EZ-104X	CAPACITOR	0.1µF,25V
C4009	NCF31EZ-104X	CAPACITOR	0.1µF,25V
C4010	NCF31EZ-104X	CAPACITOR	0.1µF,25V
C4012	NCF31EZ-104X	CAPACITOR	0.1µF,25V
C4014	NCF31EZ-104X	CAPACITOR	0.1µF,25V
C4017	NCF31EZ-104X	CAPACITOR	0.1µF,25V
C4019	NCF31EZ-104X	CAPACITOR	0.1µF,25V
C4022	NCF31EZ-104X	CAPACITOR	0.1µF,25V
C4024	NCF31EZ-104X	CAPACITOR	0.1µF,25V
C4028	NCF31EZ-104X	CAPACITOR	0.1µF,25V
C4029	NCF31EZ-104X	CAPACITOR	0.1µF,25V
C4030	NCF31EZ-104X	CAPACITOR	0.1µF,25V
C4036	NCF31EZ-104X	CAPACITOR	0.1µF,25V
C4040	NCB21CK-105X	CAPACITOR	1µF,16V
C4044	NCB21CK-105X	CAPACITOR	1µF,16V
C4048	NCB10JK-106X	CAPACITOR	10µF,6.3V
C4049	NDC31HJ-100X	CAPACITOR	10pF,50V
C4051	NDC31HJ-221X	CAPACITOR	220pF,50V
C4052	NCB21CK-105X	CAPACITOR	1µF,16V
C4053	NCF31EZ-104X	CAPACITOR	0.1µF,25V
C4201	NEA71HM-225X	E CAPACITOR	2.2µF,50V
C4202	NCF31EZ-104X	CAPACITOR	0.1µF,25V
C4203	NCB31CK-104X	CAPACITOR	0.1µF,16V
C4205	NCB31EK-103X	CAPACITOR	0.01µF,25V
C4206	NCB31CK-104X	CAPACITOR	0.1µF,16V
C4207	NCB31EK-103X	CAPACITOR	0.01µF,25V
C4208	NCB31CK-104X	CAPACITOR	0.1µF,16V
C4209	NCF21CZ-105X	CAPACITOR	1µF,16V
C4210	NCF21CZ-105X	CAPACITOR	1µF,16V
C4251	NEA71HM-335X	E CAPACITOR	3.3µF,50V
C4252	NCB31CK-104X	CAPACITOR	0.1µF,16V
C4253	NCB31EK-153X	CAPACITOR	0.015µF,25V
C4254	NCB31EK-153X	CAPACITOR	0.015µF,25V
C4256	NEA71CM-106X	E CAPACITOR	10µF,16V
C4502	NBE21AM-106X	T CAPACITOR	10µF,10V
C4504	NCF31EZ-104X	CAPACITOR	0.1µF,25V
C4505	NDC31HJ-330X	CAPACITOR	33pF,50V
C4506	NCB31HK-102X	CAPACITOR	0.001µF,50V
C4507	NCB31HK-102X	CAPACITOR	0.001µF,50V
C4508	NCB31HK-102X	CAPACITOR	0.001µF,50V
C4509	NCB31HK-102X	CAPACITOR	0.001µF,50V
C4510	NCB31CK-104X	CAPACITOR	0.1µF,16V
C4511	NCF31EZ-104X	CAPACITOR	0.1µF,25V
C4701	NBE20JM-106X	T CAPACITOR	10µF,6.3V
C4702	NCF31EZ-104X	CAPACITOR	0.1µF,25V
C4703	NBE20JM-106X	T CAPACITOR	10µF,6.3V
C4704	NCB21CK-105X	CAPACITOR	1µF,16V
C4705	NDC31HJ-820X	CAPACITOR	82pF,50V
C4706	NDC31HJ-150X	CAPACITOR	15pF,50V
C4707	NCB21CK-105X	CAPACITOR	1µF,16V
C4708	NDC31HJ-820X	CAPACITOR	82pF,50V
C4709	NDC31HJ-150X	CAPACITOR	15pF,50V
C4710	NCB31EK-103X	CAPACITOR	0.01µF,25V
C4711	NCB21CK-105X	CAPACITOR	1µF,16V
C4715	NCB21CK-105X	CAPACITOR	1µF,16V
C4719	NCB31EK-103X	CAPACITOR	0.01µF,25V
C5203	NCB10JK-106X	CAPACITOR	10µF,6.3V
C5207	NCB31EK-103X	CAPACITOR	0.01µF,25V
C5208	NCB31EK-103X	CAPACITOR	0.01µF,25V

# ⚠	REF No.	PART No.	PART NAME, DESCRIPTION	
	C5209	NCB31EK-103X	CAPACITOR	0.01µF,25V
	C5210	NCF31EZ-104X	CAPACITOR	0.1µF,25V
	C5211	NCB21CK-105X	CAPACITOR	1µF,16V
	C5212	NCB21CK-105X	CAPACITOR	1µF,16V
	C5213	NCB31HK-332X	CAPACITOR	0.0033µF,50V
	C5214	NCB31EK-103X	CAPACITOR	0.01µF,25V
	C5218	NCF31EZ-104X	CAPACITOR	0.1µF,25V
	C5219	NBP21CM-685X	T CAPACITOR	6.8µF,16V
	C5221	NCB11EK-105X	CAPACITOR	1µF,25V
	C5222	NCB31CK-104X	CAPACITOR	0.1µF,16V
	C5223	NCF31EZ-104X	CAPACITOR	0.1µF,25V
	C5225	NCF31EZ-104X	CAPACITOR	0.1µF,25V
	C5227	NCB31CK-104X	CAPACITOR	0.1µF,16V
	C5228	NCF31EZ-104X	CAPACITOR	0.1µF,25V
	C5229	NCB11EK-105X	CAPACITOR	1µF,25V
	C5230	NCB21EK-104X	CAPACITOR	0.1µF,25V
	C5232	NDC31HJ-100X	CAPACITOR	10pF,50V
	C5233	NDC31HJ-100X	CAPACITOR	10pF,50V
	C5234	NDC31HJ-100X	CAPACITOR	10pF,50V
	C5235	NDC31HJ-100X	CAPACITOR	10pF,50V
	C5236	NDC31HJ-100X	CAPACITOR	10pF,50V
	C5237	NDC31HJ-100X	CAPACITOR	10pF,50V
	C6002	NEA71CM-106X	E CAPACITOR	10µF,16V
	C6004	NCF21CZ-105X	CAPACITOR	1µF,16V
	C6005	NCB21CK-105X	CAPACITOR	1µF,16V
	C6006	NCF21CZ-105X	CAPACITOR	1µF,16V
	C6007	NCB21CK-105X	CAPACITOR	1µF,16V
	C6009	NDC31HJ-820X	CAPACITOR	82pF,50V
	C6010	NCB21CK-224X	CAPACITOR	0.22µF,16V
	C6011	NCB21CK-104X	CAPACITOR	0.1µF,16V
	C6012	NCB21CK-224X	CAPACITOR	0.22µF,16V
	C6013	NCB31EK-473X	CAPACITOR	0.047µF,25V
	C6014	NCB31EK-473X	CAPACITOR	0.047µF,25V
	C6015	NCB31EK-473X	CAPACITOR	0.047µF,25V
	C6016	NCB31EK-473X	CAPACITOR	0.047µF,25V
	C6017	NCF21CZ-105X	CAPACITOR	1µF,16V
	C6101	NCB21CK-105X	CAPACITOR	1µF,16V
	C6102	NCB10JK-106X	CAPACITOR	10µF,6.3V
	C6105	NCB31HK-102X	CAPACITOR	0.001µF,50V
	C6106	NCF21CZ-105X	CAPACITOR	1µF,16V
	C6107	NCF21CZ-105X	CAPACITOR	1µF,16V
	C6110	NCB31HK-152X	CAPACITOR	0.0015µF,50V
	C6201	NCB21CK-105X	CAPACITOR	1µF,16V
	C6202	NCB10JK-106X	CAPACITOR	10µF,6.3V
	C6203	NEA70JM-476X	E CAPACITOR	47µF,6.3V
	C6205	NCB31HK-472X	CAPACITOR	0.0047µF,50V
	C6210	NCB31EK-103X	CAPACITOR	0.01µF,25V
	C6301	NCB11CK-225X	CAPACITOR	2.2µF,16V
	C6302	NCB10JK-106X	CAPACITOR	10µF,6.3V
	C6303	NEA70JM-226X	E CAPACITOR	22µF,6.3V
	C6305	NCB31HK-561X	CAPACITOR	560pF,50V
	C6307	NEA71CM-106X	E CAPACITOR	10µF,16V
	C6308	NBE20JM-106X	T CAPACITOR	10µF,6.3V
	C6310	NCB31HK-102X	CAPACITOR	0.001µF,50V
	C6401	NCB21CK-105X	CAPACITOR	1µF,16V
	C6402	NCF21CZ-105X	CAPACITOR	1µF,16V
	C6406	NCB31CK-683X	CAPACITOR	0.068µF,16V
	C6410	NCB21CK-474X	CAPACITOR	0.47µF,16V
	C6501	NCB21CK-105X	CAPACITOR	1µF,16V
	C6502	NCF21CZ-105X	CAPACITOR	1µF,16V
	C6506	NCB21CK-224X	CAPACITOR	0.22µF,16V

# ⚠	REF No.	PART No.	PART NAME, DESCRIPTION	
	C6510	NCB31CK-104X	CAPACITOR	0.1µF,16V
	C6601	NCB11CK-225X	CAPACITOR	2.2µF,16V
	C6602	NCF21CZ-105X	CAPACITOR	1µF,16V
	C6603	NCB11CK-475X	CAPACITOR	4.7µF,16V
	C6605	NDC31HJ-331X	CAPACITOR	330pF,50V
	C6606	NCF21CZ-105X	CAPACITOR	1µF,16V
	C6607	NCB11EK-105X	CAPACITOR	1µF,25V
	C6610	NCB31EK-103X	CAPACITOR	0.01µF,25V
	C6616	NCB21CK-105X	CAPACITOR	1µF,16V
	C6622	NCB21CK-105X	CAPACITOR	1µF,16V
	C6700	NCB31HK-272X	CAPACITOR	0.0027µF,50V
	C6701	NCF21CZ-105X	CAPACITOR	1µF,16V
	C6702	NCB41CK-106X	CAPACITOR	10µF,16V
	C6711	NCB21HK-472X	CAPACITOR	0.0047µF,50V
	C6802	NCF21CZ-105X	CAPACITOR	1µF,16V
	C6805	NCB31HK-102X	CAPACITOR	0.001µF,50V
	C6810	NCB31EK-103X	CAPACITOR	0.01µF,25V
	C6812	NCF21CZ-105X	CAPACITOR	1µF,16V
	C6820	NCB31HK-102X	CAPACITOR	0.001µF,50V
	C7001	NCB31EK-103X	CAPACITOR	0.01µF,25V
	C7002	NBE20JM-106X	T CAPACITOR	10µF,6.3V
	C7003	NBE20JM-335X	T CAPACITOR,D	3.3µF,6.3V
	C7004	NCB31HK-332X	CAPACITOR,D	0.0033µF,50V
	C7005	NCB31EK-103X	CAPACITOR,D	0.01µF,25V
	C7006	NDC31HJ-390X	CAPACITOR,D	39pF,50V
	C7007	NCB31HK-102X	CAPACITOR,D	0.001µF,50V
	C7008	NCB31EK-103X	CAPACITOR,D	0.01µF,25V
	C7012	NCB31CK-104X	CAPACITOR,D	0.1µF,16V
	C7013	NCB30JK-105X	CAPACITOR	1µF,6.3V
	C7019	NDC31HJ-121X	CAPACITOR	120pF,50V
	C7020	NDC31HJ-151X	CAPACITOR	150pF,50V
	C7021	NBP41EM-475X	T CAPACITOR	4.7µF,25V
	C7022	NCB31EK-103X	CAPACITOR	0.01µF,25V
	C7023	NCB31EK-103X	CAPACITOR	0.01µF,25V
	C7024	NBP41EM-475X	T CAPACITOR	4.7µF,25V
	C7025	NCB31EK-103X	CAPACITOR	0.01µF,25V
	C7026	NBE20JM-106X	T CAPACITOR	10µF,6.3V
	C7028	NCB31EK-103X	CAPACITOR	0.01µF,25V
	C7029	NCB31CK-104X	CAPACITOR,A,D	0.1µF,16V
	C7030	NCB31EK-103X	CAPACITOR	0.01µF,25V
	C7031	NDC31HJ-220X	CAPACITOR	22pF,50V
	C7032	NCB31CK-104X	CAPACITOR	0.1µF,16V
	C7033	NCB21CK-334X	CAPACITOR	0.33µF,16V
	C7034	NDC31HJ-331X	CAPACITOR	330pF,50V
	C7035	NDC31HJ-330X	CAPACITOR	33pF,50V
	C7036	NCB31CK-104X	CAPACITOR	0.1µF,16V
	C7037	NDC31HJ-330X	CAPACITOR	33pF,50V
	C7038	NCB31EK-103X	CAPACITOR	0.01µF,25V
	C7039	NBP41CM-106X	T CAPACITOR	10µF,16V
	C7041	NBE21AM-106X	T CAPACITOR,D	10µF,10V
	C7042	NCB31EK-103X	CAPACITOR	0.01µF,25V
	C7045	NDC31HJ-100X	CAPACITOR,A,B,C	10pF,50V
	C7046	NDC31HJ-100X	CAPACITOR,A,B,C	10pF,50V
	C7047	NDC31HJ-100X	CAPACITOR,A,B,C	10pF,50V
	C7048	NBE20JM-106X	T CAPACITOR,A,B,C	10µF,6.3V
	C7051	NCB31EK-103X	CAPACITOR	0.01µF,25V
	C7052	NBE20JM-106X	T CAPACITOR	10µF,6.3V
	C7053	NCB31EK-103X	CAPACITOR	0.01µF,25V
	C7054	NBP41EM-475X	T CAPACITOR	4.7µF,25V
	C7056	NCB21CK-104X	CAPACITOR,D	0.1µF,16V
	C7057	NCB31EK-682X	CAPACITOR,A	0.0068µF,25V

# ⚠	REF No.	PART No.	PART NAME, DESCRIPTION	
	C7058	NCB31CK-104X	CAPACITOR,D	0.1µF,16V
	C7059	NBP41EM-475X	T CAPACITOR	4.7µF,25V
	C7060	NCB11CK-225X	CAPACITOR	2.2µF,16V
	C7061	NCB11CK-475X	CAPACITOR,D	4.7µF,16V
	C7062	NCB11CK-475X	CAPACITOR,D	4.7µF,16V
	C7063	NCB11CK-475X	CAPACITOR,D	4.7µF,16V
	C7064	NCB11EK-105X	CAPACITOR	1µF,25V
	C7065	NCB11EK-105X	CAPACITOR	1µF,25V
	C7066	NCB11EK-105X	CAPACITOR	1µF,25V
	C7067	NCB31CK-104X	CAPACITOR	0.1µF,16V
	C7069	NCB31EK-103X	CAPACITOR	0.01µF,25V
	L101	NQL034K-330X	COIL	33µH
	L1601	NQL38DK-100X	COIL	10µH
	L1602	NQL144K-100X	COIL	10µH
	L2001	NQL144K-101X	COIL	100µH
	L2003	NQL034K-470X	COIL	47µH
	L2021	NQL144K-470X	COIL	47µH
	L2401	NQL144K-470X	COIL	47µH
	L3002	NQR0006-001X	FERRITE BEAD	
	L3003	NQR0129-002X	FERRITE BEAD	
	L3502	NQL38DK-220X	COIL	22µH
	L4201	NQR0006-001X	FERRITE BEAD	
	L4501	NQR0006-001X	FERRITE BEAD	
	L4502	NQL034K-220X	COIL	22µH
	L4701	NQL38DK-220X	COIL	22µH
	L5201	NQL38DK-470X	COIL	47µH
	L5202	NQL38DK-220X	COIL	22µH
	L5203	NQL38DK-220X	COIL	22µH
	L6001	NQL52EM-100X	COIL	10µH
	L6002	NQL52EM-100X	COIL	10µH
	L6101	NQL52EM-390X	COIL	39µH
	L6106	NQL144K-101X	COIL	100µH
	L6107	NQL144K-101X	COIL	100µH
	L6201	NQL52EM-470X	COIL	47µH
	L6301	NQL52EM-390X	COIL	39µH
	L6306	NQL52EM-470X	COIL	47µH
	L6401	NQL52EM-470X	COIL	47µH
	L6501	NQL52EM-470X	COIL	47µH
	L6601	NQL52EM-221X	COIL	220µH
	L6602	NQL144K-221X	COIL	220µH
	L6606	NQL144K-220X	COIL	22µH
	L6701	NQL52EM-100X	COIL	10µH
	L7001	NQL38DK-220X	COIL	22µH
	L7002	NQL085J-8R2X	COIL,D	8.2µH
	L7005	NQL38DK-220X	COIL	22µH
	L7006	NQL38DK-220X	COIL	22µH
	L7007	NQL38DK-220X	COIL	22µH
	L7008	NQL38DK-220X	COIL	22µH
	L7009	NQL38DK-220X	COIL	22µH
	L7010	NQL085J-4R7X	INDUCTOR	4.7µH
	L7012	NQL144K-100X	COIL,A,B,C	10µH
	X101	NAX0251-001X	CRYSTAL RESONATOR	
	X102	NAX0325-001X	CRYSTAL RESONATOR	
	X3001	QAX0565-001	CRYSTAL RESONATOR	
	WR1	WJV0039-001A	E-PRIMARY WIRE,JUMP WIRE	
	WR2	WJM0180-001B	E-SI C WIRE C-F,JP4001/JP4002,B,C,D	
	WR3	YU40017-025-1	THIN WIRE,JP2005-SD1,B,C,D	
⚠	J101	QAB0022-001	LI BATTERY	
	J504	LY31356-002A	JACK UNIT	
	J505	QND0068-001	S JACK	
	CN1	QGF0507F3-10X	FFC/FPC CONNECTOR	

# ⚠	REF No.	PART No.	PART NAME, DESCRIPTION	
	CN2	QGF0507F3-14X	FFC/FPC CONNECTOR	
	CN3	QGF0505F2-18X	FPC CONNECTOR	
	CN4	QGA1201F2-06X	CONNECTOR	
	CN5	QGF0507F1-11X	FPC CONNECTOR	
	CN7	QGF0507F3-11X	FFC/FPC CONNECTOR	
	CN8	QGA1201C2-02X	CONNECTOR	
	CN11	QGF0507F1-20X	FPC CONNECTOR,D	
	CN12	QGA1201F2-05X	CONNECTOR,A,B,C	
	CN13	QGF0507F3-14X	FFC/FPC CONNECTOR	
	CN15	QGF0507F1-22X	FPC CONNECTOR	
	CN16	QGF0305F1-33X	FPC CONNECTOR	
	CN18	QGF0507F3-12X	FFC/FPC CONNECTOR	
	CN19	QGF0301F1-39X	FPC CONNECTOR,B,C,D	
	CN22	QGF0507F3-14X	FFC/FPC CONNECTOR	
	CN25	QGB0506L1-30X	CONNECTOR	
	CN27	QGA1201C2-02X	CONNECTOR	
	CN28	QGA1002F1-13X	CONNECTOR	
⚠	F6001	NMFZ007-2R0X-K	FUSE	T2.0A
⚠	F6002	NMFZ010-R50X-A	FUSE	T0.5A
	SD1	LY42845-001A	SHIELD SHEET,B,C,D	
	OT1	LY30016-049A	SPACER-A,FOR WR1	
	OT2	LY30029-0B6A	SPACER(A),FOR LI BATTERY	

JVC SERVICE & ENGINEERING COMPANY OF AMERICA

DIVISION OF JVC AMERICAS CORP.

Head office	:	1700 Valley Road Wayne, New Jersey 07470-9976	(973)315-5000
East Coast	:	10 New Maple Avenue Pine Brook, New Jersey 07058-9641	(973)396-1000
Midwest	:	705 Enterprise Street Aurora, Illinois 60504-8149	(630)851-7855
West Coast	:	5665 Corporate Avenue Cypress, California 90630-0024	(714)229-8011
Atlanta	:	1500 Lakes Parkway Lawrenceville, Georgia 30043-5857	(770)339-2582
Hawaii	:	2969 Mapunapuna Place Honolulu, Hawaii 96819-2040	(808)833-5828

JVC CANADA INC.

Head office	:	21 Finchdene Square Scarborough, Ontario M1X 1A7	(416)293-1311
Montreal	:	16800 Rte Trans-Canadienne, Kirkland, Quebec H9H 5G7	(514)871-1311
Vancouver	:	13040 Worster Court Richmond, B.C. V6V 2B3	(604)270-1311

JVC

S40895-03

Printed in Japan

JVC

SCHEMATIC DIAGRAMS

COMPACT VHS CAMCORDER

GR-SXM335U, SXM730U, SXM735U

CD-ROM No. SML200103

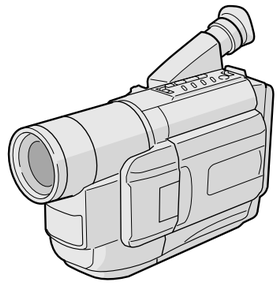

DIGITAL STILL CAMERA

S-VHS C

Super VHS

Super VHS ET

Regarding service information other than these sections, refer to the GR-SXM330U, SXM930U service manual (No. 86595). Also, be sure to note important safety precautions provided in the service manual.

SPECIFICATIONS *(The specifications shown pertain specifically to the model GR-SXM735U)*

Camcorder

General

Format	:	S-VHS/VHS NTSC standard
Power source	:	DC 11 V ⎓ (Using AC Adapter) DC 6 V ⎓ (Using battery pack)
Power consumption		
Viewfinder on	:	4.7 W
LCD monitor on	:	5.4 W
Video light	:	3.0 W
Signal system	:	NTSC-type
Video recording system		
Luminance	:	FM recording
Color	:	Converted sub-carrier direct recording Conforms to VHS standard
Cassette	:	S-VHS C / VHS C cassette
Tape speed		
SP	:	33.35 mm/sec. (1-5/16 ips)
EP	:	11.12 mm/sec. (7/16 ips)
Recording time (max.)		
SP	:	40 minutes
EP	:	120 minutes (with TC-40)
D.S.C. format		
Recording format	:	Digital data storage (based on JPEG)
Recording medium	:	Built-in flash memory, 2 Mbyte
Number of storable shots		
FINE mode	:	approx. 30 shots
STANDARD mode	:	approx. 60 shots
Image size	:	640 x 480 pixels (when captured on a PC)
Operating temperature	:	0°C to 40°C (32°F to 104°F)
Operating humidity	:	35% to 80%
Storage temperature	:	–20°C to 50°C (–4°F to 122°F)
Weight	:	Approx. 900 g (2.0 lbs)
Dimensions	:	206 mm x 112 mm x 118 mm (8-1/8" x 4-7/16" x 4-11/16") (with the LCD monitor closed and with the viewfinder fully tilted downward)
Pickup	:	1/4" format CCD
Lens	:	F1.6, f = 3.9 mm to 62.4 mm, 16:1 power zoom lens with auto iris and macro control, filter diameter 40.5 mm
Viewfinder	:	Electronic viewfinder with 0.55" color LCD
White balance adjustment	:	Auto/Manual adjustment
LCD monitor	:	2.5" diagonally measured, LCD panel/TFT active matrix system
Speaker	:	Monaural

Connectors

Video	:	1 V (p-p), 75 Ω unbalanced, analog output (via Video output connector)
Audio	:	300 mV (rms), 1 kΩ analog output (via Audio output connector)
Digital	:	ø2.5 mm, 4-pole, mini-head jack
S-Video	:	**Y** : 1 V (p-p), 75 Ω, analog output **C** : 0.29 V (p-p), 75 Ω, analog output

AC Adapter AP-V10U

Power requirement		
U.S.A. and Canada	:	AC 120 V∼, 60 Hz
Other countries	:	AC 110 V to 240 V∼, 50 Hz/60 Hz
Output	:	DC 11 V ⎓, 1 A
Dimensions (W x H x D)	:	59 mm x 31 mm x 69 mm (2-3/8" x 1-1/4" x 2-3/4")
Weight	:	Approx. 130 g (0.29 lbs)

Optional Accessories

- **Battery Packs BN-V12U, BN-V20U, BN-V400U**
- **A/V (Audio/Video) Cable**
- **S-Video Cable QAM0004-004**
- **Compact S-VHS (S-VHS C) Cassettes ST-C-40/30/20**
- **Compact VHS (VHS C) Cassettes TC-40/30/20**
- **Active Carrying Bag CB-V7U**

Some accessories are not available in some areas. Please consult your nearest JVC dealer for details on accessories and their availability.

Specifications shown are for SP mode unless otherwise indicated. E & O.E. Design and specifications subject to change without notice.

This Schematic Diagrams is printed on 100% recycled paper.

COPYRIGHT © 2001 VICTOR COMPANY OF JAPAN, LTD.

No. 86616SCH
March 2001

SECTION 4
CHARTS AND DIAGRAMS

4.1 BOARD INTERCONNECTIONS

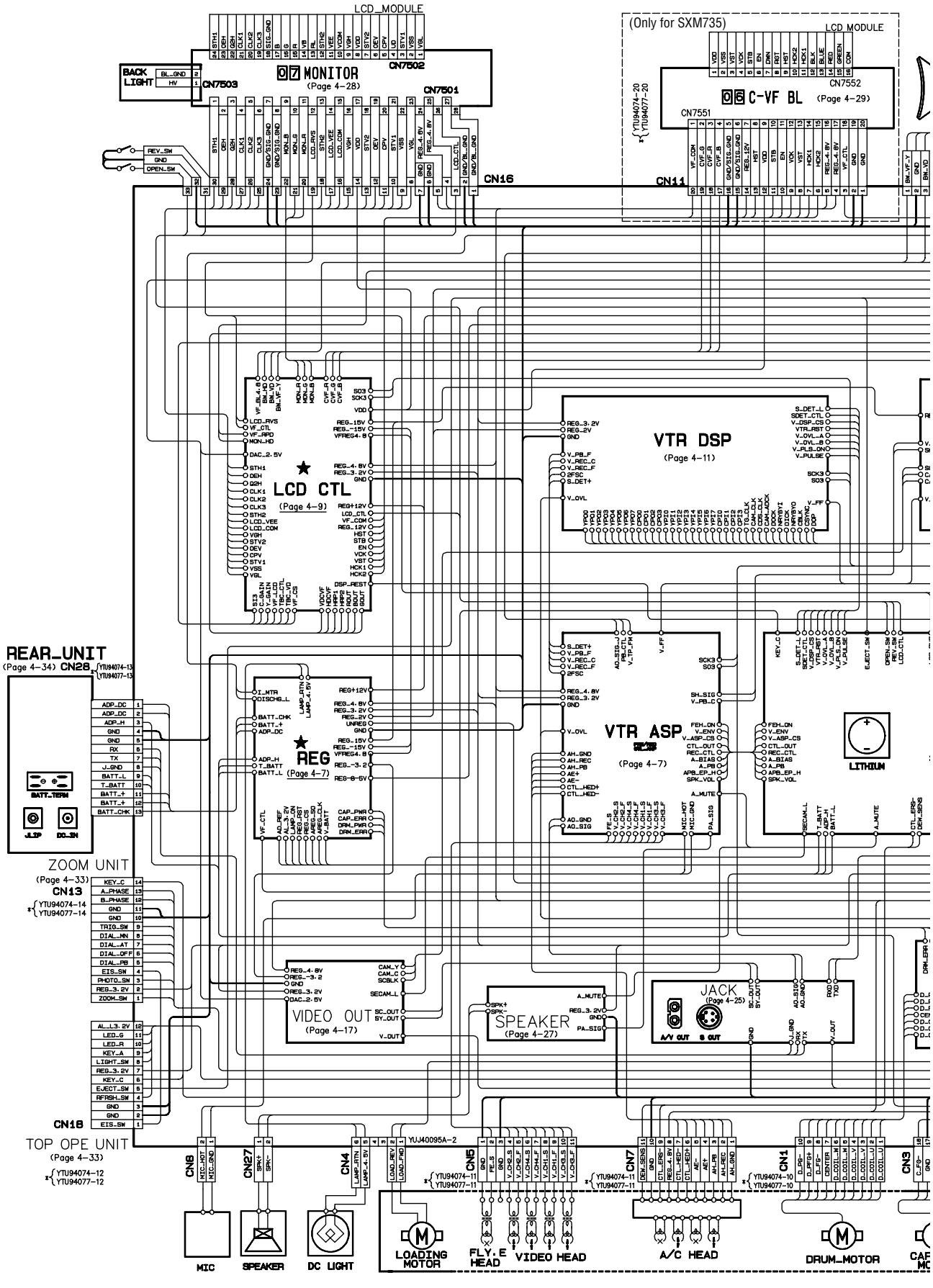

***Note 1:** How to find the page showing the continuative schematic diagram*
Example) TO CPU (Page 4-5): ***Refer to the GR-SXM330U, SXM930U service manaul (No. 86595)***
TO REG (Page 4-7): ***Refer to this service manual***
***2:** The mark ★ means modified points.*

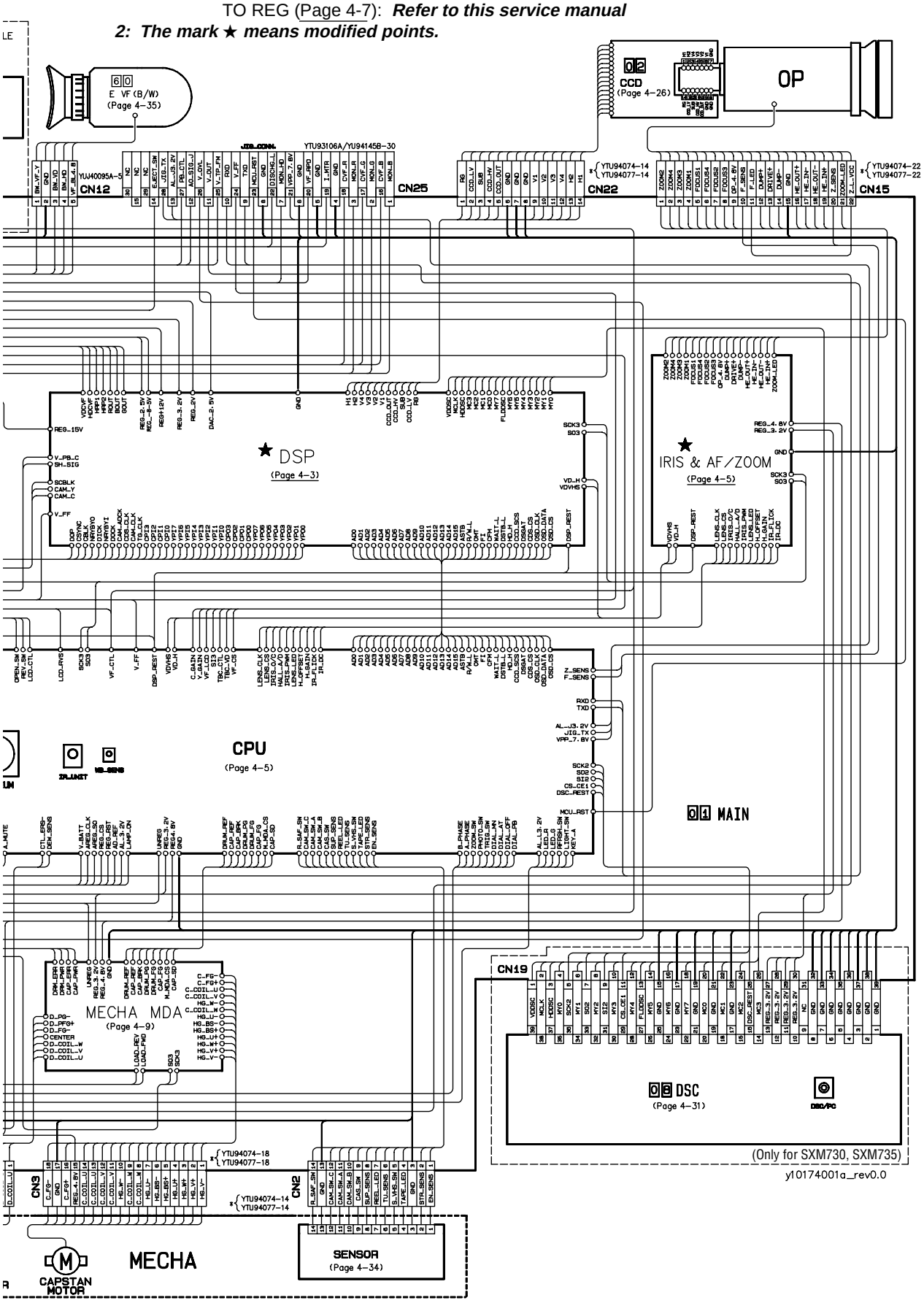

4.2 DSP SCHEMATIC DIAGRAM

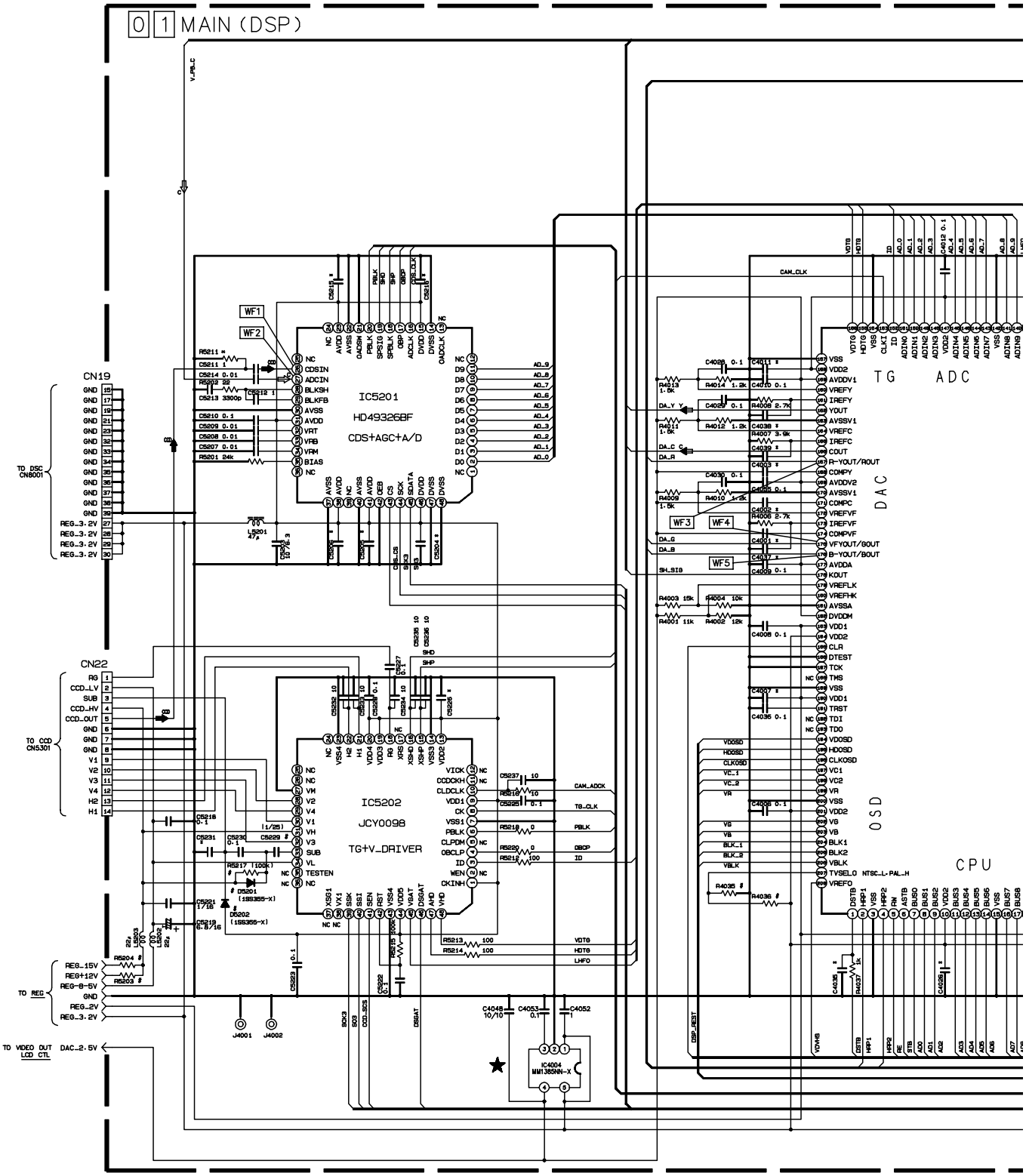

NOTES : 1.THE PARTS WITH MARKED(*)IS NOT USED.
2. For DSP waveforms, please refer to page 4-63.
3. The mark ★ means modified points.

EXCHANGE PARTS LIST

	CCD	R4035	R4036	R5203	R5204	D5201	D5202	R5217	C5229
NTSC_L	TCD5621P	0	*	*	0	*	1SS355-X	*	0
	MN391132FT	0	*	*	0	1SS355-X	*	100K	1/25
PAL_L	MN372132FT	*	0	*	0	1SS355-X	*	100K	1/25
	ICX227AK	*	0	0	*	1SS355-X	*	100K	1/25
PAL_H	MN39241FT	*	0	*	0	1SS355-X	*	100K	1/25
	ICX229AK	*	0	0	*	1SS355-X	*	100K	1/25

	IC4002	C4040	R4038	RA4001	RA4002	RA4003
M1#6	*	*	*	*	*	*
M1#7	TMB4C2973-28-X	1	*	*	*	*
M1#8	TMB4C2973-28-X	1	100	NRZ0034-100W	NRZ0034-100W	NRZ0034-100W

NOTES: ***● For the destination of each signal and further line connections that are cut off from this diagram, refer to "4.1 BOARD INTERCONNECTIONS".***
● When ordering parts, be sure to order according to the Part Number indicated in the Parts List.

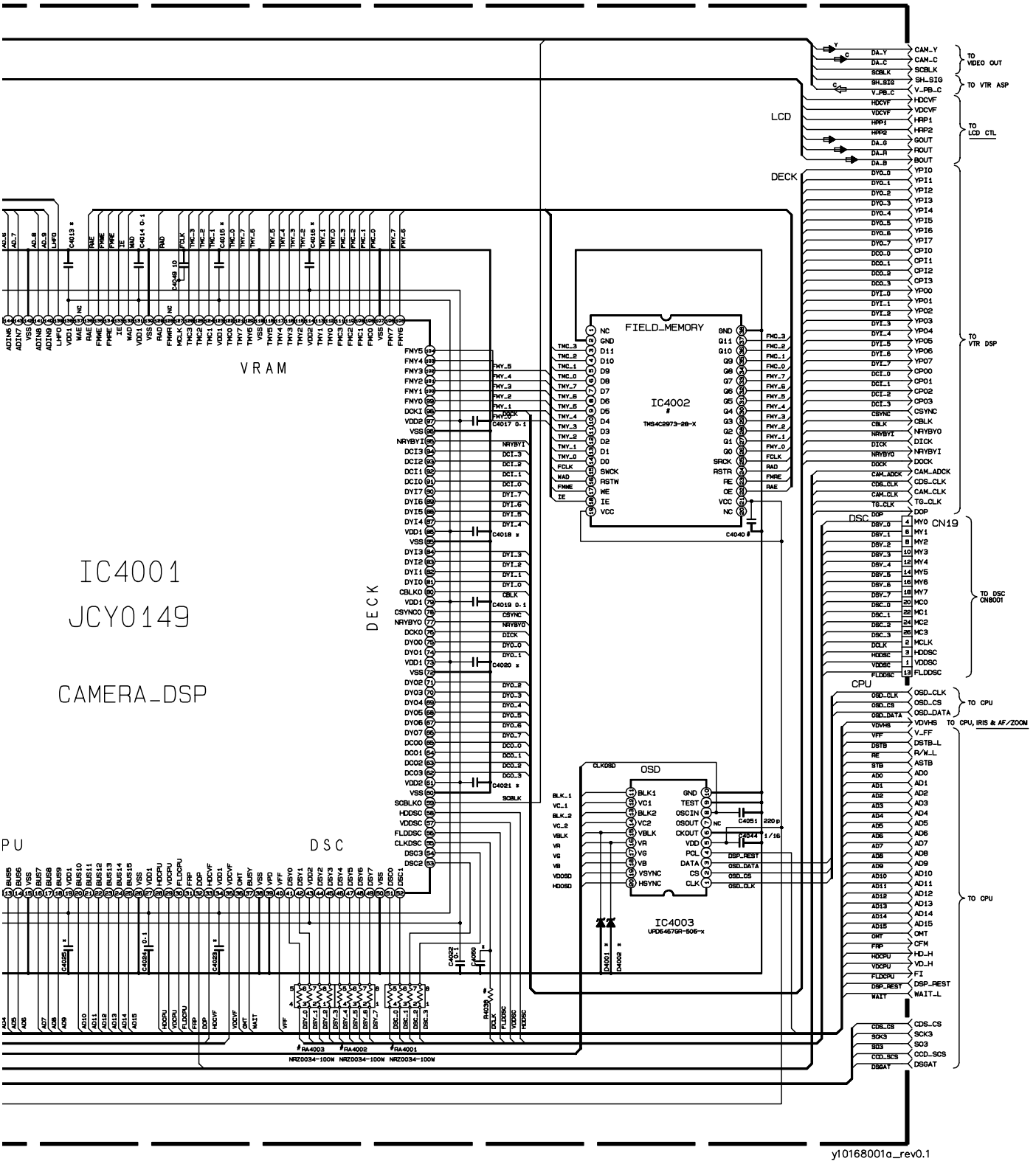

Note: ***How to fins the page showing the continuative schematic diagram.***
Example) TO DSP : ***Refer to the reference models's service manaul.***
TO DSP : ***Refer to this service manual.***

4.3 IRIS & AF/ZOOM SCHEMATIC DIAGRAM

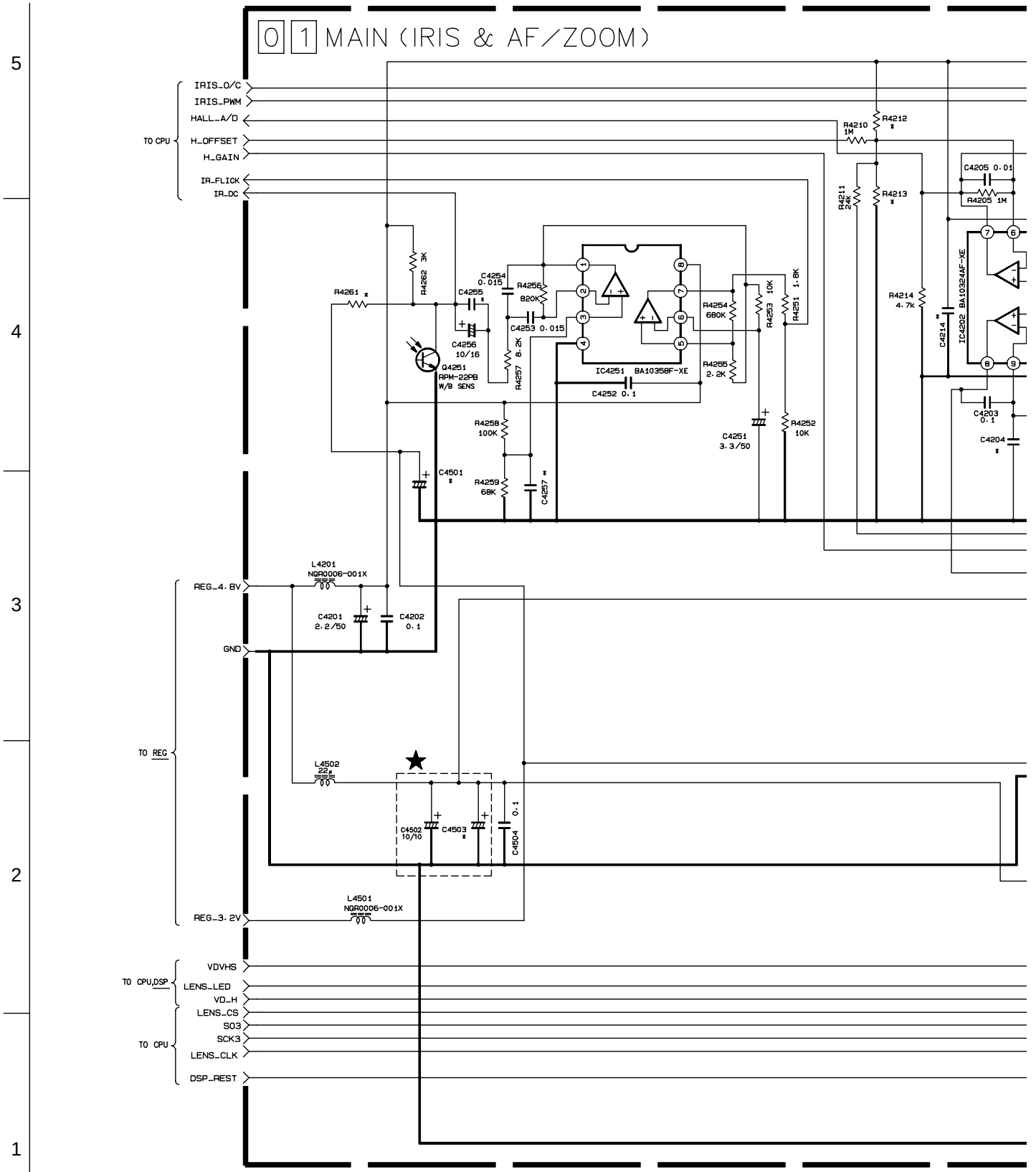

NOTES : 1. THIS PARTS WITH MARKED (*) IS NOT USED.
2. The mark ★ means modified points.

NOTES: ***• For the destination of each signal and further line connections that are cut off from this diagram, refer to "4.1 BOARD INTERCONNECTIONS".***
• When ordering parts, be sure to order according to the Part Number indicated in the Parts List.

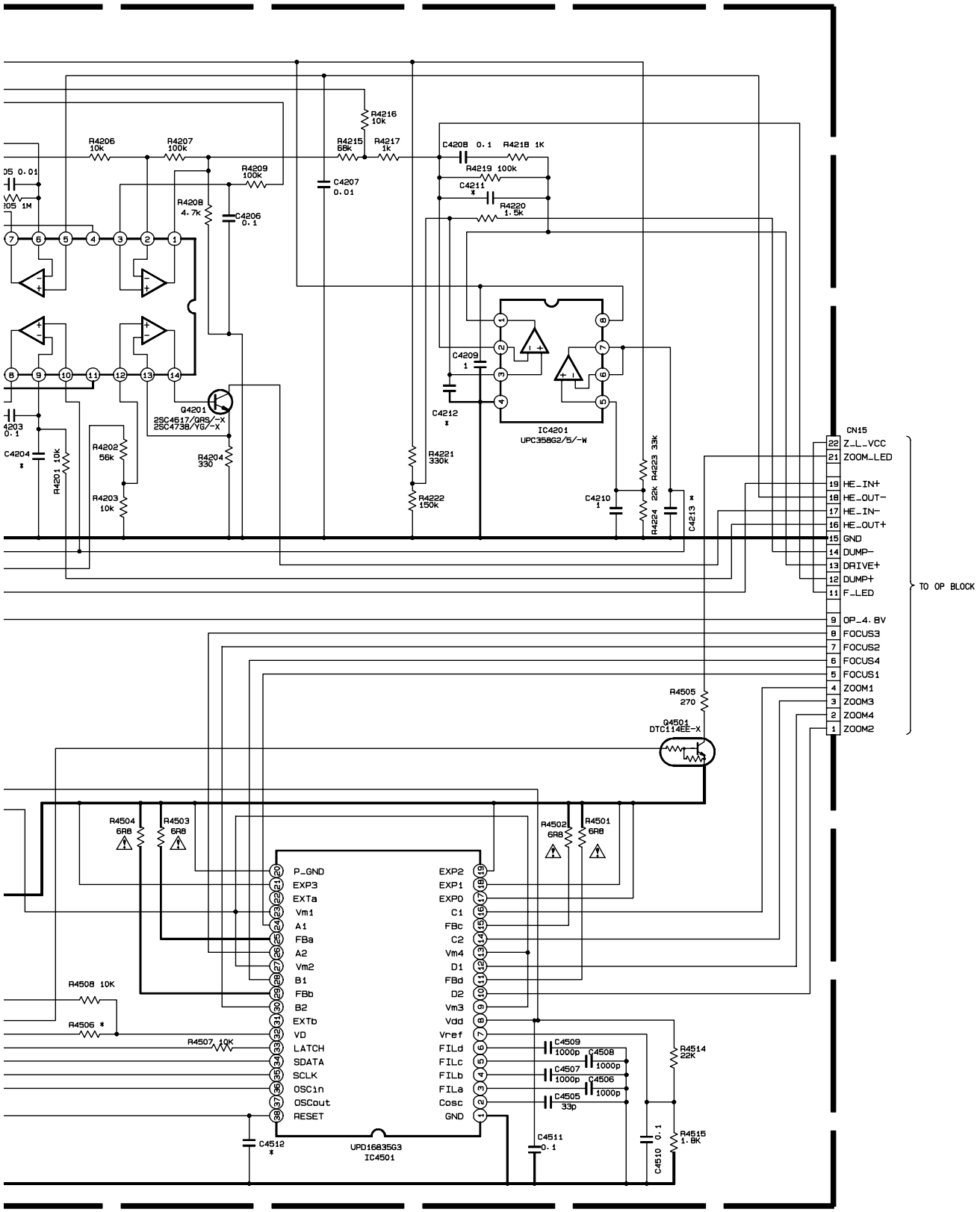

Note : How to fins the page showing the continuative schematic diagram.
Example) TO DSP : ***Refer to the reference models's service manaul.***
TO DSP : ***Refer to this service manual.***

4.4 REGULATOR SCHEMATIC DIAGRAM

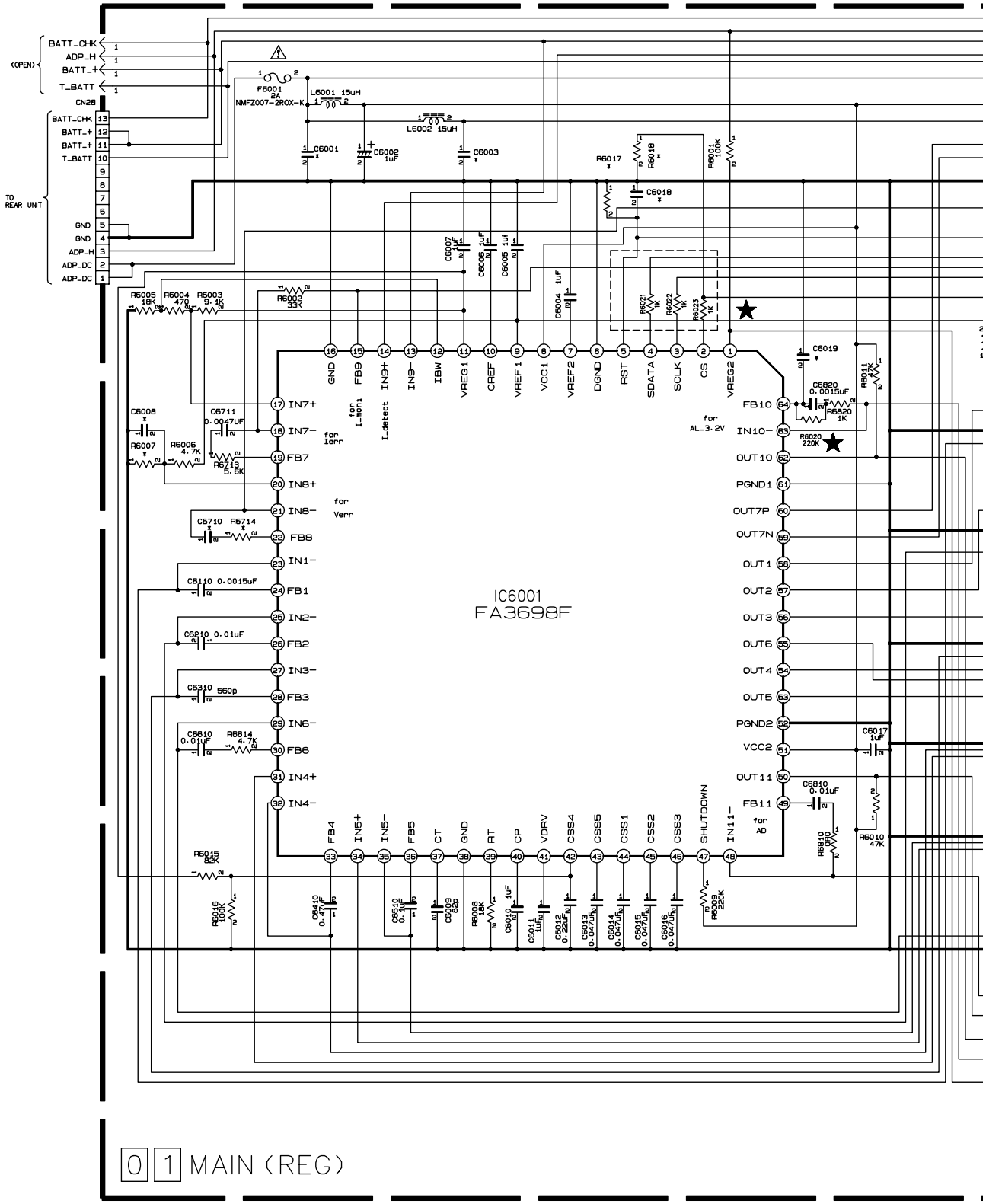

01 MAIN (REG)

NOTES : 1. THE PARTS WITH MARKED (*) IS NOT USED. 2. The mark ★ means modified points.

EXCHANGE LIST

1.LIGHT YES OR NO

LIGHT	YES	NO
Q6306	exist	open
L6306	exist	open
C6307	exist	open
R6306-6307	exist	open

2. LCD YES OR NO

LCD	YES	NO
Q6307-6308	exist	open
R6309-6311	exist	open
C6308	exist	open
R6312	open	0R0

3.CCD VOLTAGE

CCD VOLTAGE	PAL		NTSC
picture elements	LOW	others	
memory	NO		
D6616	8.2V	5.1V	8.2V

NOTES: ***● For the destination of each signal and further line connections that are cut off from this diagram, refer to "4.1 BOARD INTERCONNECTIONS".***
● When ordering parts, be sure to order according to the Part Number indicated in the Parts List.

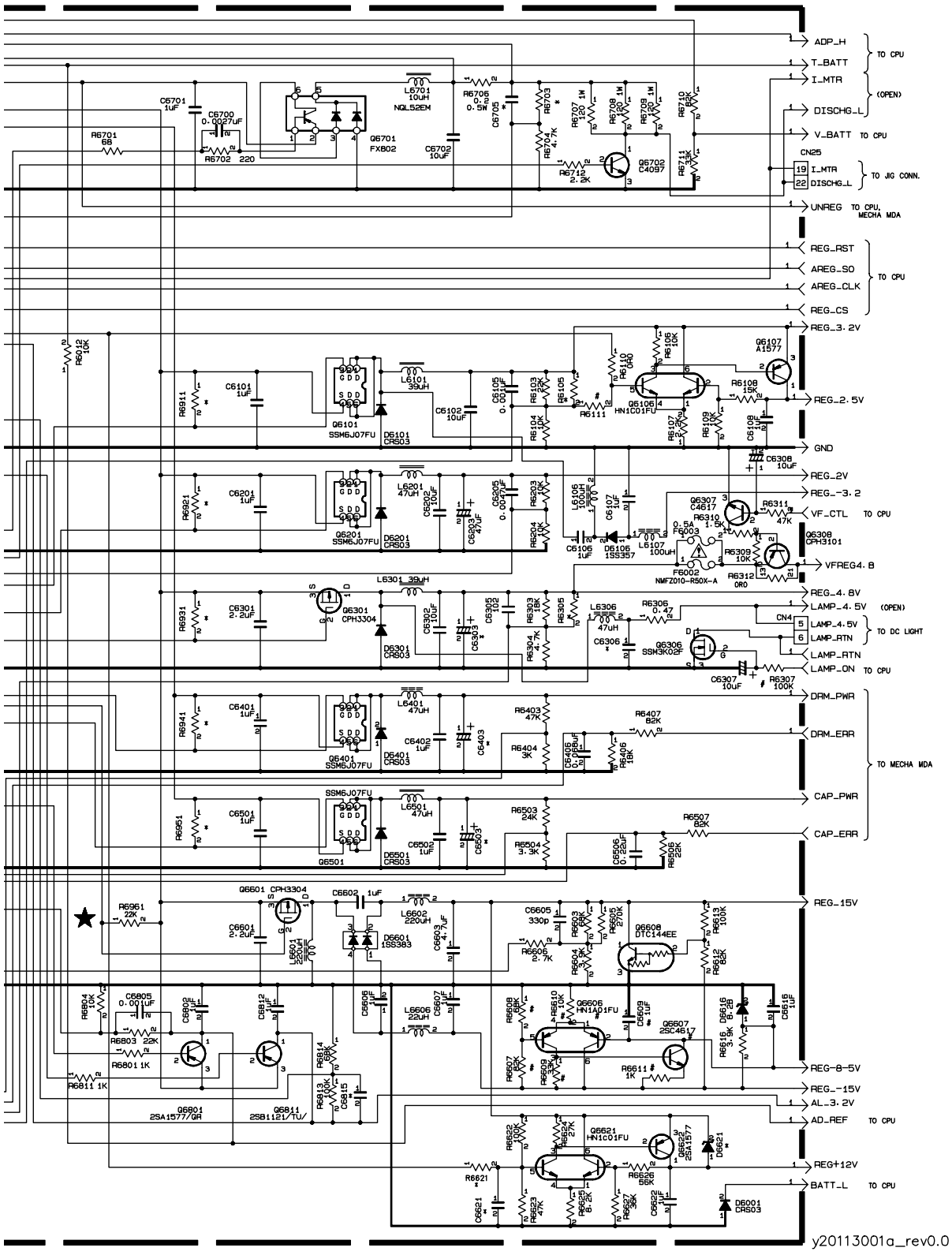

4.5 LCD CTL SCHEMATIC DIAGRAM

– FOR SXM735 –

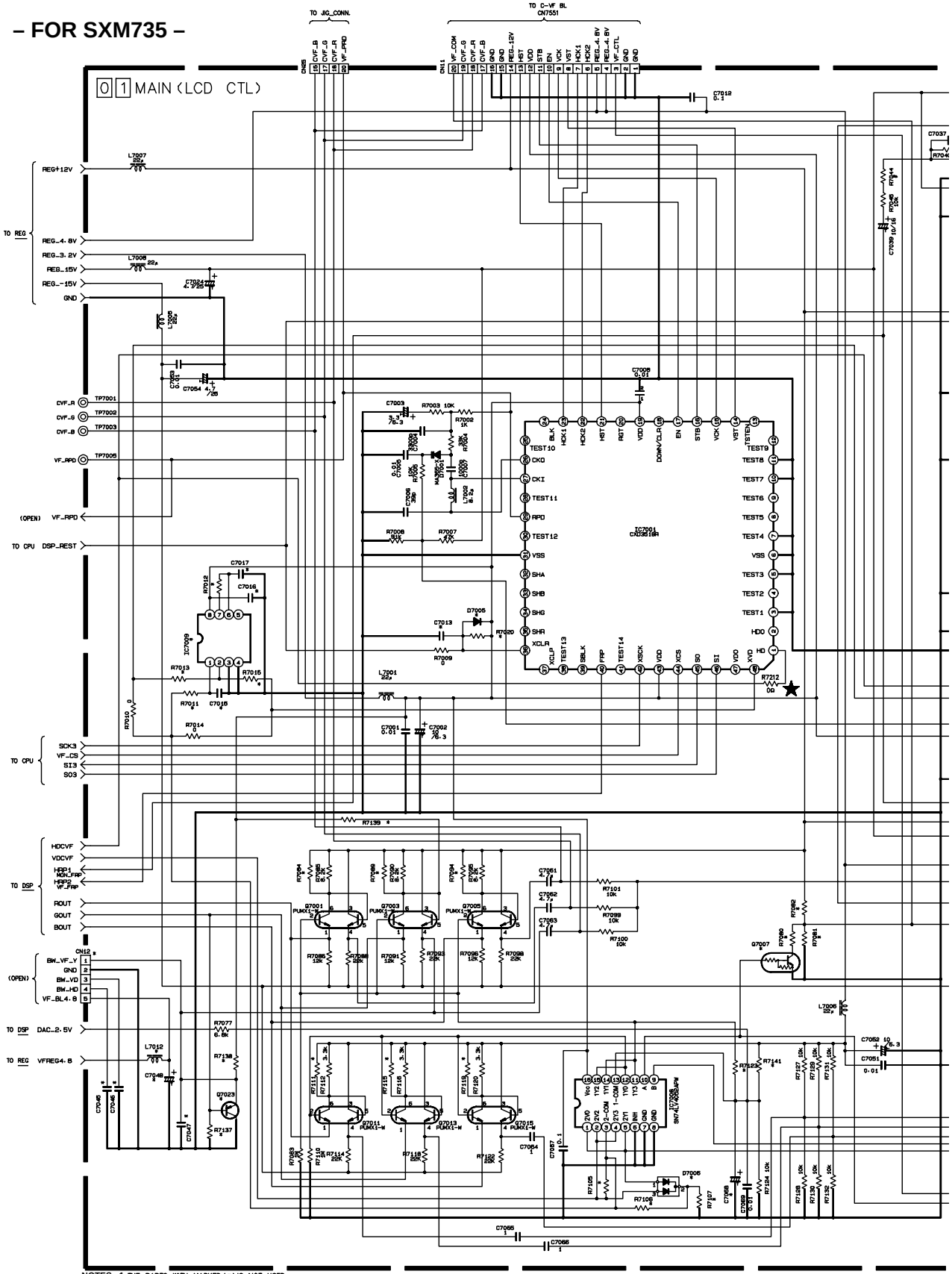

EXCHANGE_PARTS_RIST

	IC7007	Q7022	R7021	R7029	R7044	R7046	R7067	R7072	R7073	R7142	R7143	C7029	C7057
2.6inch	TC7S04FU	DTC144EE	*	*	7.5k	10k	22k	1.8k	330	*	0	0.1	6800p
3inch	*	*	0	0	4.3k	*	6.8k	1.2k	820	0	*	*	*

	R7057	R7058
NTSC	*	0
PAL	0	*

NOTES: ***● For the destination of each signal and further line connections that are cut off from this diagram, refer to "4.1 BOARD INTERCONNECTIONS".***
● When ordering parts, be sure to order according to the Part Number indicated in the Parts List.

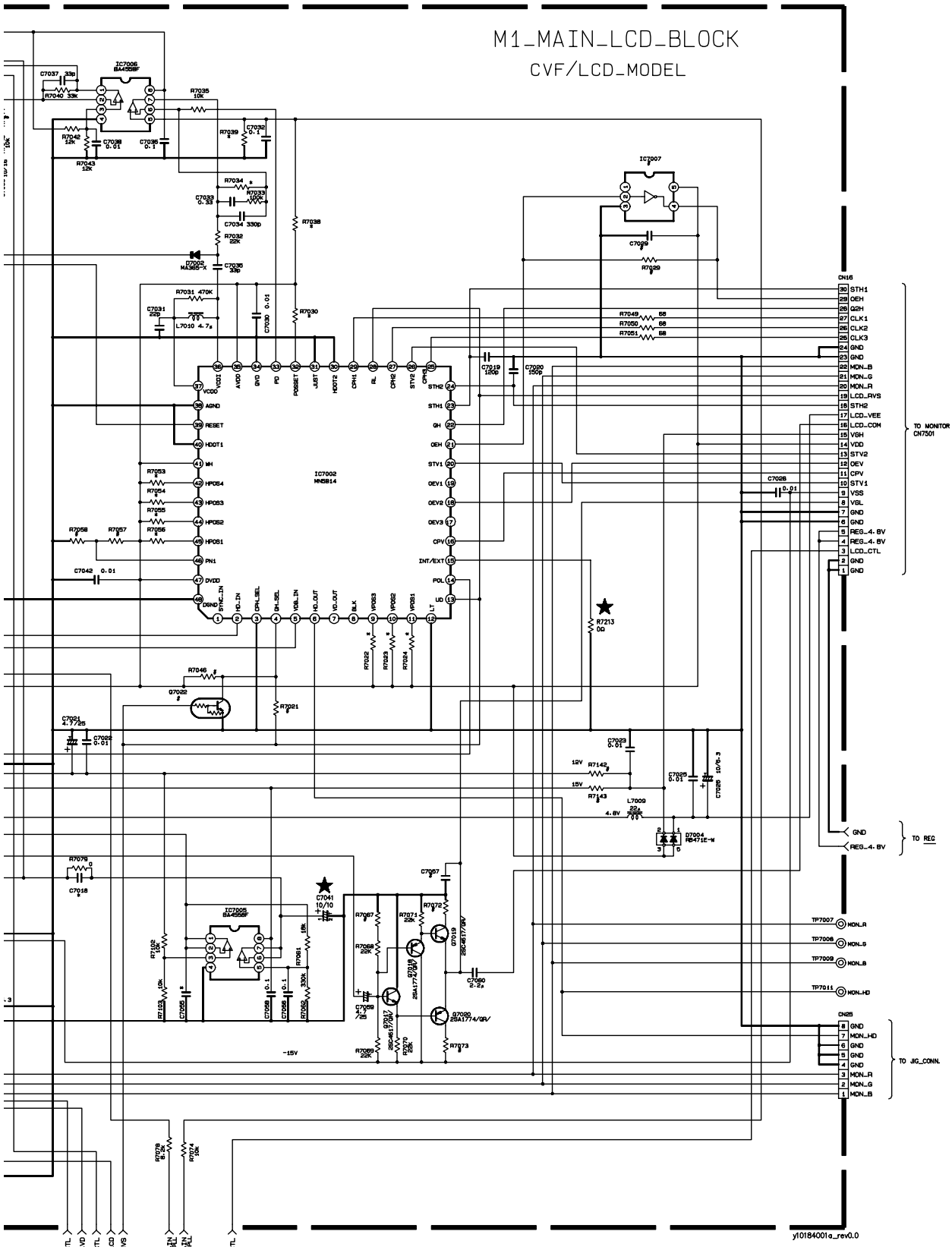

Note: ***How to fins the page showing the continuative schematic diagram.***
Example) TO DSP : ***Refer to the reference models's service manaul.***
TO DSP : ***Refer to this service manual.***

4.6 MAIN CIRCUIT BOARD

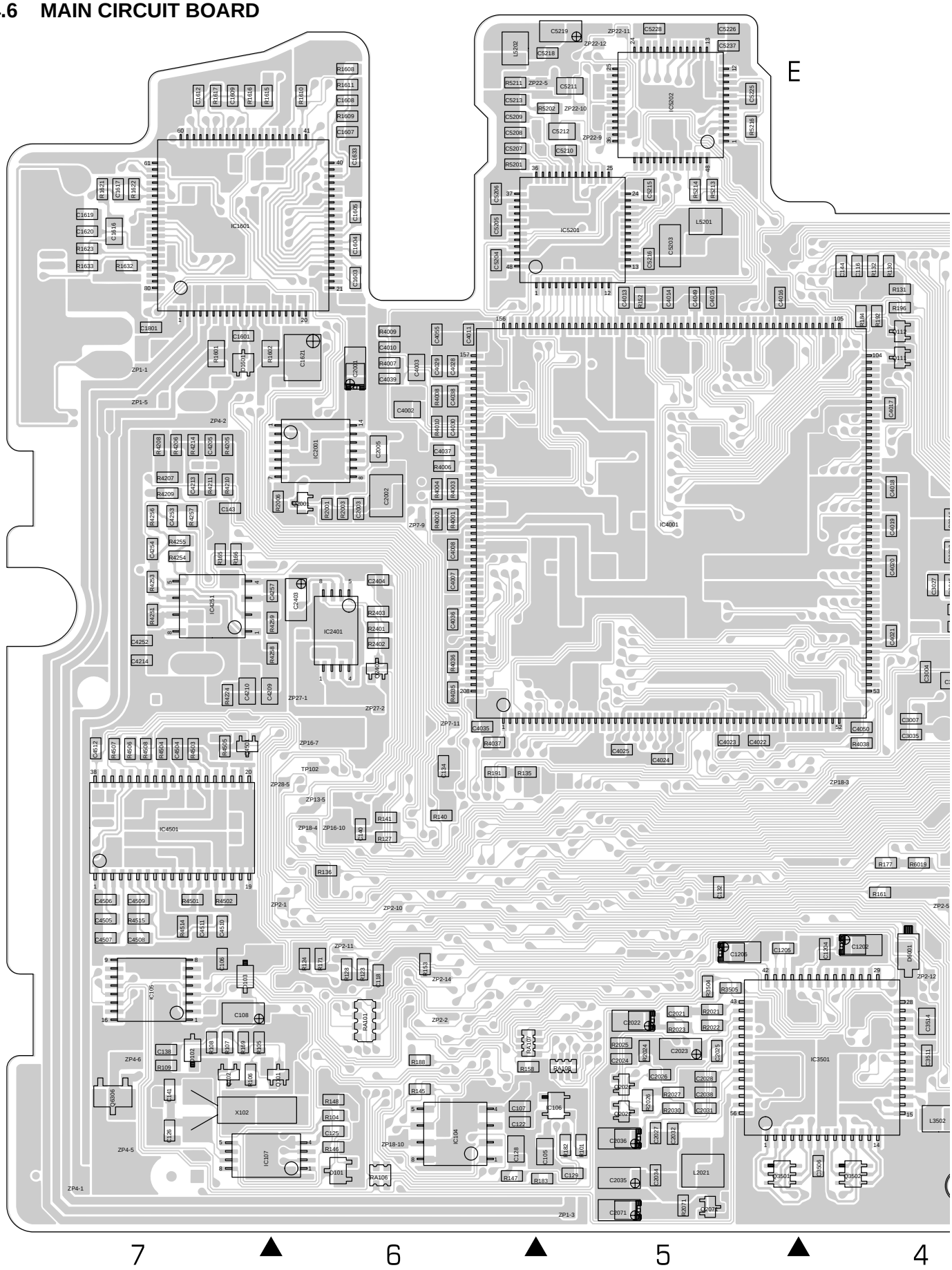

FOIL SIDE (B)

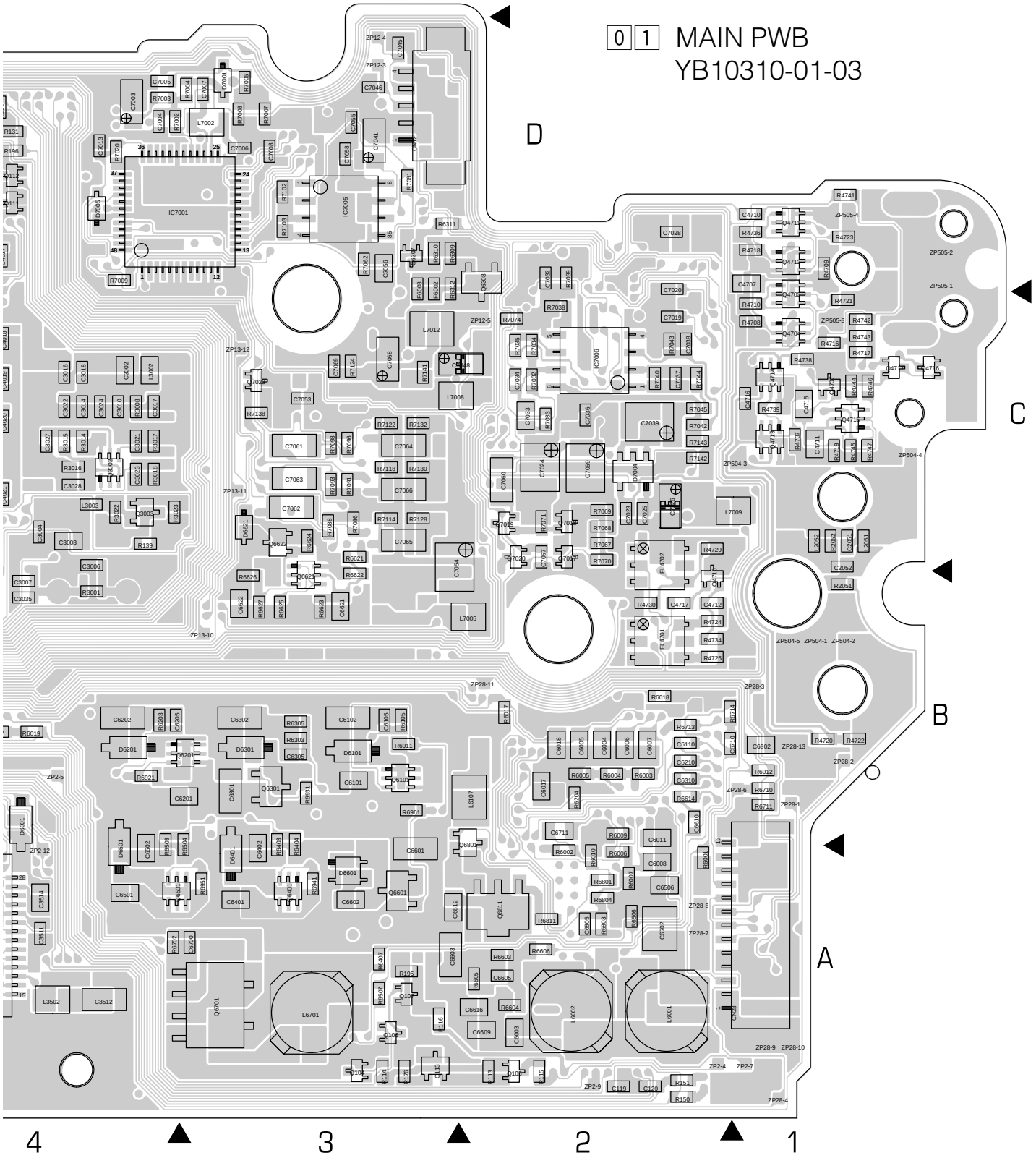

COMPONENT PARTS LOCATION GUIDE (MAIN)

REF.No.	LOCATION		
CAPACITOR			
C102	A	C	5B
C103	A	C	4B
C104	A	C	5B
C105	B	C	5A
C106	B	C	7B
C107	B	C	6A
C108	B	C	7A
C109	A	C	6B
C110	A	C	6C
C111	A	C	6A
C112	A	C	6A
C113	A	C	4D
C114	A	C	4D
C115	A	C	6B
C116	B	C	4D
C118	B	C	6A
C119	B	C	2A
C120	B	C	2A
C1201	A	C	4A
C1202	B	C	4B
C1204	B	C	4B
C1205	B	C	5B
C1206	B	C	5B
C121	A	C	6A
C122	B	C	6A
C123	A	C	6A
C124	A	C	6A
C125	B	C	6A
C126	B	C	7A
C127	A	C	6A
C128	B	C	6A
C129	B	C	5A
C131	A	C	5A
C132	B	C	5B
C133	A	C	5B
C134	B	C	6B
C135	A	C	6B
C136	A	C	2A
C137	A	C	1A
C138	B	C	7A
C140	B	C	6B
C141	B	C	7A
C143	B	C	7C
C144	B	C	4D
C146	A	C	4D
C147	A	C	4D
C1601	B	C	7D
C1602	A	C	7D
C1603	B	C	6D
C1604	B	C	6D
C1605	B	C	6D
C1606	A	C	7D
C1607	B	C	6E
C1608	B	C	6E
C1609	B	C	7E
C1610	A	C	7E
C1611	A	C	7E
C1612	B	C	7E
C1613	A	C	7E
C1614	A	C	7E
C1615	A	C	7D
C1616	B	C	7D
C1617	B	C	7D
C1618	A	C	7D
C1619	B	C	7D
C1620	B	C	7D
C1621	B	C	6D
C1622	A	C	7D
C1623	A	C	7D
C1624	A	C	7D
C1625	A	C	7D
C1626	A	C	7D
C1627	A	C	7D
C1628	A	C	7D
C1629	A	C	7D
C1630	A	C	7D
C1631	A	C	6D
C1632	A	C	6D
C1633	B	C	6E
C1801	B	C	7D
C2001	B	C	6D
C2002	B	C	6C
C2003	B	C	6C
C2004	A	C	6D
C2005	B	C	6C
C2021	B	C	5A
C2022	B	C	5A
C2023	B	C	5A
C2024	B	C	5A
C2025	B	C	5A
C2026	B	C	5A
C2027	B	C	5A
C2028	B	C	5A
C2029	A	C	5A
C2030	A	C	5A
C2031	B	C	5A
C2032	B	C	5A
C2033	A	C	4A
C2034	B	C	5A
C2035	B	C	5A
C2036	B	C	5A
C2037	A	C	6D
C2038	B	C	5A
C2051	B	C	1C
C2052	B	C	1C
C2071	B	C	5A
C2072	A	C	5A
C2401	A	C	6C
C2402	A	C	6C
C2403	B	C	6C
C2404	B	C	6C
C3002	B	C	4C
C3003	B	C	4C
C3004	B	C	4C
C3005	A	C	3C
C3006	B	C	4C
C3007	B	C	4B
C3008	A	C	5D
C3009	A	C	4D
C3010	B	C	4C
C3011	A	C	3C
C3012	A	C	3C
C3013	A	C	3C
C3014	B	C	4C
C3015	A	C	3C
C3016	B	C	4C
C3017	B	C	4C
C3018	B	C	4C
C3019	A	C	3C
C3020	A	C	3C
C3021	B	C	4C
C3022	B	C	4C
C3023	B	C	4C
C3024	B	C	4C
C3027	B	C	4C
C3028	B	C	4C
C3031	A	C	4D
C3032	A	C	4B
C3033	A	C	4B
C3035	B	C	4B
C3037	A	C	4D
C3506	B	C	4A
C3507	A	C	4A
C3508	A	C	4A
C3509	A	C	5D
C3510	A	C	4A
C3511	B	C	4A
C3512	B	C	4A
C3513	A	C	5A
C3514	B	C	4A
C3515	A	C	5A
C3516	A	C	5B
C3901	A	C	4A
C3902	A	C	4A
C3903	A	C	4A
C4001	A	C	6C
C4002	B	C	6D
C4003	B	C	6D
C4006	A	C	5C
C4007	B	C	6C
C4008	B	C	6C
C4009	A	C	6C
C4010	B	C	6D
C4011	B	C	6D
C4012	A	C	5D
C4013	B	C	5D
C4014	B	C	5D
C4015	B	C	5D
C4016	B	C	5D
C4017	B	C	4D
C4018	B	C	4C
C4019	B	C	4C
C4020	B	C	4C
C4021	B	C	4C
C4022	B	C	5B
C4023	B	C	5B
C4024	B	C	5B
C4025	B	C	5B
C4026	A	C	6C
C4028	B	C	6D
C4029	B	C	6D
C4030	B	C	6D
C4035	B	C	6B
C4036	B	C	6C
C4037	B	C	6C
C4038	B	C	6D
C4039	B	C	6D
C4040	A	C	5C
C4044	A	C	6C
C4048	A	C	5C
C4049	B	C	5D
C4050	B	C	4B
C4051	A	C	6C
C4052	A	C	5C
C4053	A	C	5C
C4055	B	C	6D
C4201	A	C	7B
C4202	A	C	7B
C4203	A	C	7C
C4204	A	C	7C
C4205	B	C	7C
C4206	A	C	7C
C4207	A	C	7C
C4208	A	C	7C
C4209	B	C	7C
C4210	B	C	7C
C4211	A	C	7C
C4212	A	C	7C
C4213	B	C	7C
C4214	B	C	7C
C4251	A	C	7B
C4252	B	C	7C
C4253	B	C	7C
C4254	B	C	7C
C4255	A	C	6C
C4256	A	C	6C
C4257	B	C	6C
C4501	A	C	7B
C4502	A	C	7B
C4503	A	C	7B
C4504	B	C	7B
C4505	B	C	7B
C4506	B	C	7B
C4507	B	C	7B
C4508	B	C	7B
C4509	B	C	7B
C4510	B	C	7B
C4511	B	C	7B
C4512	B	C	7B
C4701	A	C	1C
C4702	A	C	1C
C4703	A	C	1C
C4704	A	C	5C
C4705	A	C	5D
C4706	A	C	5D
C4707	B	C	1D
C4708	A	C	5C
C4709	A	C	5C
C4710	B	C	1D
C4711	B	C	1C
C4712	B	C	2B
C4713	A	C	2C
C4714	A	C	5C
C4715	B	C	1C
C4716	B	C	1C
C4717	B	C	2B
C4718	A	C	1C
C4719	A	C	1C
C5203	B	C	5D
C5204	B	C	6D
C5205	B	C	6D
C5206	B	C	6D
C5207	B	C	6E
C5208	B	C	6E
C5209	B	C	6E
C5210	B	C	5E
C5211	B	C	5E
C5212	B	C	5E
C5213	B	C	6E
C5214	A	C	5D
C5215	B	C	5D
C5216	B	C	5D
C5218	B	C	5E
C5219	B	C	5E
C5221	A	C	6E
C5222	A	C	5D
C5223	A	C	5E
C5225	B	C	5E
C5226	B	C	5E
C5227	A	C	5E
C5228	B	C	5E
C5229	A	C	5E
C5230	A	C	5E
C5231	A	C	5E
C5232	A	C	5E
C5233	A	C	5E
C5234	A	C	5E
C5235	A	C	5E
C5236	A	C	5E
C5237	B	C	5E
C6001	A	C	2A
C6002	A	C	4B
C6003	B	C	2A
C6004	B	C	2B
C6005	B	C	2B
C6006	B	C	2B
C6007	B	C	2B
C6008	B	C	2A
C6009	A	C	2A
C6010	A	C	2A
C6011	B	C	2B
C6012	A	C	2A
C6013	A	C	2A
C6014	A	C	2A
C6015	A	C	2A
C6016	A	C	2A
C6017	B	C	2B
C6018	B	C	2B
C6020	A	C	2B
C6101	B	C	3B
C6102	B	C	3B
C6105	B	C	3B
C6106	A	C	3B
C6107	A	C	3B
C6110	B	C	2B
C6201	B	C	3B
C6202	B	C	4B
C6203	A	C	4B
C6205	B	C	4B
C6210	B	C	2B
C6301	B	C	3B
C6302	B	C	3B
C6303	A	C	3B
C6305	B	C	3B
C6306	A	C	3B
C6307	A	C	7A
C6308	A	C	3C
C6310	B	C	2B
C6401	B	C	3A
C6402	B	C	3A
C6403	A	C	4A
C6406	A	C	1B
C6410	A	C	1A
C6501	B	C	4A
C6502	B	C	4A
C6503	A	C	4B
C6506	B	C	2A
C6510	A	C	1A
C6601	B	C	3A
C6602	B	C	3A
C6603	B	C	3A
C6605	B	C	2A
C6606	A	C	3A
C6607	A	C	3A
C6609	B	C	2A
C6610	B	C	2B
C6616	B	C	2A
C6621	B	C	3B
C6622	B	C	3B
C6700	B	C	3A
C6701	A	C	3A
C6702	B	C	2A
C6705	A	C	2A
C6710	B	C	2B
C6711	B	C	2B
C6802	B	C	1B
C6805	B	C	2A
C6810	A	C	2B
C6812	B	C	3A
C6815	A	C	2A
C6820	A	C	2B
C7001	A	C	3D
C7002	A	C	4D
C7003	B	C	4D
C7004	B	C	4D
C7005	B	C	4D
C7006	B	C	3D
C7007	B	C	3D
C7008	B	C	3D
C7012	A	C	3D
C7013	B	C	4D
C7018	A	C	3D
C7019	B	C	2C
C7020	B	C	2D
C7021	A	C	3D
C7022	A	C	3D
C7023	B	C	2C
C7024	B	C	2C
C7025	B	C	2C
C7026	B	C	2C
C7028	B	C	2D
C7029	A	C	2C
C7030	A	C	2C
C7031	A	C	2C
C7032	B	C	2D
C7033	B	C	2C
C7034	B	C	2C
C7035	A	C	2C
C7036	B	C	2C
C7037	B	C	2C
C7038	B	C	2C
C7039	B	C	2C
C7041	B	C	3D
C7042	A	C	2C
C7045	B	C	3D
C7046	B	C	3D
C7047	A	C	3D
C7048	B	C	2C
C7051	A	C	2C
C7052	A	C	2C
C7053	B	C	3C
C7054	B	C	3C
C7055	B	C	3D
C7056	B	C	3D
C7057	B	C	2C
C7058	B	C	3D
C7059	B	C	2C
C7060	B	C	2C
C7061	B	C	3C
C7062	B	C	3C
C7063	B	C	3C
C7064	B	C	3C
C7065	B	C	3C
C7066	B	C	3C
C7067	A	C	3C
C7068	B	C	3C
C7069	B	C	3C
C7201	A	C	3D
C7202	A	C	3D
CB1	A	C	5B
CONNECTOR			
CN1	A	C	5A
CN11	A	C	3D
CN12	B	C	3D
CN13	A	C	4D
CN15	A	C	7B
CN16	A	C	2D
CN18	A	C	5D
CN19	A	C	5B
CN2	A	C	2A
CN22	A	C	6E
CN25	A	C	2A
CN27	A	C	6C
CN28	B	C	1A
CN3	A	C	6E
CN4	A	C	7A
CN5	A	C	4A
CN7	A	C	6D
CN8	A	C	5A
DIODE			
D101	B	C	6A
D102	B	C	7A
D103	B	C	7A
D105	A	C	2A
D106	A	C	1A
D107	A	C	2A
D1601	B	C	7D
D1602	A	C	7E
D3001	A	C	4B
D4001	A	C	6B
D4002	A	C	6B
D501	A	C	1A
D502	A	C	1A
D5201	A	C	5E
D5202	A	C	5D
D6001	B	C	4B
D6101	B	C	3B
D6106	A	C	2B
D6201	B	C	4B
D6301	B	C	3B
D6401	B	C	3A
D6501	B	C	4A
D6601	B	C	3A
D6616	A	C	2A
D6621	B	C	3C
D7001	B	C	3D
D7002	A	C	2C
D7004	B	C	2C
D7005	B	C	4D
IC			
IC101	A	C	5B
IC102	A	C	4B
IC104	B	C	6A
IC105	B	C	7A
IC106	B	C	5A
IC107	B	C	7A
IC1601	B	C	7D
IC1801	A	D	7D
IC2001	B	C	6C
IC2401	B	C	6C
IC3001	A	C	4C
IC3002	A	C	4B
IC3003	A	C	4D
IC3501	B	C	4A
IC4001	B	C	5C
IC4002	A	C	5C
IC4003	A	C	6C
IC4004	A	C	5C
IC4201	A	C	7C
IC4202	A	C	7C
IC4251	B	C	7C
IC4501	B	C	7B
IC4702	A	C	2B
IC5201	B	C	5D
IC5202	B	C	5E
IC6001	A	C	2B
IC7001	B	C	4D
IC7002	A	C	2C
IC7005	B	C	3D
IC7006	B	C	2C
IC7007	A	C	1C
IC7008	A	C	3C
COIL			
L101	A	C	4B
L1601	A	C	6D
L1602	A	C	7D
L2001	A	C	6C
L2003	A	C	6C
L2021	B	C	5A
L2051	B	C	1C
L2052	B	C	1C
L2071	A	C	5A
L2072	A	C	5A
L2401	A	C	6C
L3002	B	C	4C
L3003	B	C	4C
L3502	B	C	4A
L3503	A	C	4B
L4201	A	C	7B
L4501	A	C	7B
L4502	A	C	7B
L4701	A	C	6C
L4702	A	C	1C
L501	A	C	1A
L5201	B	C	5D
L5202	B	C	6E
L5203	A	C	5E
L6001	B	C	2A
L6002	B	C	2A
L6101	A	C	3B
L6106	A	C	2B
L6107	B	C	2B
L6201	A	C	4B
L6301	A	C	3B
L6306	A	C	3B
L6401	A	C	3A
L6501	A	C	4A
L6601	A	C	3A
L6602	A	C	2A
L6606	A	C	3A
L6701	B	C	3A
L7001	A	C	3D
L7002	B	C	3D
L7005	B	C	2B
L7006	A	C	3B
L7007	A	C	3D
L7008	B	C	2C
L7009	B	C	1C
L7010	A	C	2C
L7012	B	C	3C
TRANSISTOR			
Q101	B	C	6A
Q102	B	C	7A
Q103	A	C	6B
Q104	B	C	3A
Q105	B	C	2A
Q106	B	C	3A
Q107	B	C	3A
Q110	A	C	7A
Q111	B	C	4D
Q112	B	C	4D
Q113	B	C	3A
Q2001	B	C	6C
Q2007	A	C	6D
Q2008	A	C	6D
Q2021	B	C	5A
Q2022	B	C	5A
Q2023	A	C	4A
Q2071	B	C	5A
Q2401	B	C	6C
Q3002	B	C	4C
Q3003	B	C	4C
Q3006	A	C	4B
Q3501	B	C	5A
Q3502	B	C	4A
Q3505	A	C	4A
Q3901	A	C	4A
Q4201	A	C	6C
Q4251	A	D	7D
Q4501	B	C	7B
Q4701	A	C	5D
Q4702	A	C	6C
Q4703	B	C	1C
Q4704	B	C	1C
Q4705	A	C	5C
Q4706	A	C	6C
Q4707	B	C	1C
Q4708	A	C	2C
Q4709	A	C	2B
Q4710	B	C	2B
Q4711	B	C	1D
Q4712	B	C	1D
Q4713	B	C	1C
Q4714	B	C	1C
Q4715	B	C	1C
Q4716	B	C	1C
Q4717	B	C	1C
Q6101	B	C	3B
Q6201	B	C	3B
Q6301	B	C	3B
Q6306	B	C	7A
Q6307	B	C	3D
Q6308	B	C	2D
Q6401	B	C	3A
Q6501	B	C	4A
Q6601	B	C	3A
Q6606	A	C	3A
Q6607	A	C	3A
Q6608	A	C	2A
Q6621	B	C	3B
Q6622	B	C	3C
Q6701	B	C	3A
Q6702	A	C	3A
Q6801	B	C	2B
Q6811	B	C	2A
Q7001	A	C	3C
Q7003	A	C	3C
Q7005	A	C	3C
Q7007	A	C	3D
Q7011	A	C	3C
Q7013	A	C	3C
Q7015	A	C	3C
Q7017	B	C	2C
Q7018	B	C	2C
Q7019	B	C	2C
Q7020	B	C	2C
Q7022	A	C	2C
Q7023	B	C	3C
Q7201	A	C	3D
Q7202	A	C	3D
Q7203	A	C	2D
RESISTOR			
R101	B	C	5A
R102	A	C	5B
R104	B	C	6A
R105	B	C	7A
R106	B	C	7A
R107	B	C	7A
R108	B	C	7A
R109	B	C	7A
R110	A	C	6B
R111	A	C	6B
R112	A	C	6C
R113	B	C	2A
R114	B	C	3A
R115	B	C	2A
R116	B	C	3A

REF.No.	LOCATION			REF.No.	LOCATION			REF.No.	LOCATION			REF.No.	LOCATION			REF.No.	LOCATION			REF.No.	LOCATION			REF.No.	LOCATION		
R118	A	C	2A	R184	B	C	4D	R4214	B	C	7C	R5218	A	C	5E	R7002	B	C	4D	R7142	B	C	2C	ZP1-7	A	C	7A
R119	A	C	2A	R188	B	C	6A	R4215	A	C	7C	R5220	A	C	5E	R7003	B	C	4D	R7143	B	C	2C	ZP1-8	A	C	7A
R120	A	C	1A	R189	A	C	4B	R4216	A	C	7C	R6001	B	C	2A	R7004	B	C	3D	R7201	A	C	3D	ZP18-10	B	C	6A
R121	A	C	1A	R190	A	C	6B	R4217	A	C	7C	R6002	B	C	2A	R7005	B	C	3D	R7202	A	C	3D	ZP18-3	B	C	4B
R122	A	C	7D	R191	B	C	6B	R4218	A	C	7C	R6003	B	C	2B	R7007	B	C	3D	R7203	A	C	3D	ZP18-4	B	C	6B
R123	B	C	6A	R192	B	C	4D	R4219	A	C	7C	R6004	B	C	2B	R7008	B	C	3D	R7204	A	C	3D	ZP1-9	A	C	7A
R124	B	C	6B	R195	B	C	3A	R4220	A	C	7C	R6005	B	C	2B	R7009	B	C	4D	R7205	A	C	3D	ZP2-1	B	C	6B
R125	A	C	7D	R196	B	C	4D	R4221	A	C	7C	R6006	B	C	2A	R7020	B	C	4D	R7206	A	C	4D	ZP2-10	B	C	6B
R126	A	C	7D	R2001	B	C	6C	R4222	A	C	7C	R6007	B	C	2A	R7021	A	C	2C	R7207	A	C	3D	ZP2-11	B	C	6B
R127	B	C	6B	R2002	A	C	6D	R4223	A	C	7C	R6008	A	C	2A	R7022	A	C	2C	R7208	A	C	3D	ZP2-12	B	C	4A
R128	B	C	6A	R2003	B	C	6C	R4224	B	C	7C	R6009	B	C	2B	R7023	A	C	2C	R7209	A	C	3D	ZP2-14	B	C	6A
R129	A	C	6B	R2004	A	C	6D	R4251	B	C	7C	R6010	B	C	2A	R7024	A	C	2C	R7210	A	C	3D	ZP2-2	B	C	6A
R130	B	C	4D	R2005	A	C	5D	R4252	A	C	7C	R6011	A	C	2B	R7029	A	C	1C	R7211	A	C	3D	ZP22-1	A	C	5E
R131	B	C	4D	R2006	B	C	6C	R4253	B	C	7C	R6012	B	C	1B	R7030	A	C	2C	R7212	A	C	3D	ZP22-10	B	C	5E
R132	B	C	4D	R2011	A	C	5D	R4254	B	C	7C	R6015	A	C	1A	R7031	A	C	2C	R7213	A	C	2D	ZP22-11	B	C	5E
R133	A	C	6B	R2012	A	C	5D	R4255	B	C	7C	R6016	A	C	1A	R7032	B	C	2C	R7214	A	C	2C	ZP22-12	B	C	5E
R134	A	C	4D	R2021	B	C	5A	R4256	B	C	7C	R6017	B	C	2B	R7033	B	C	2C	R7215	A	C	2C	ZP22-13	A	C	5E
R135	B	C	6B	R2022	B	C	5A	R4257	B	C	7C	R6018	B	C	2B	R7034	B	C	2C	R7216	A	C	2C	ZP22-14	A	C	5E
R136	B	C	6B	R2023	B	C	5A	R4258	B	C	6C	R6019	B	C	4B	R7035	B	C	2C	R7217	A	C	2C	ZP22-2	A	C	5E
R137	A	C	6B	R2024	B	C	5A	R4259	B	C	6C	R6020	A	C	2B	R7038	B	C	2C	RA101	B	C	6A	ZP22-3	A	C	5D
R138	A	C	7A	R2025	B	C	5A	R4261	A	C	6C	R6021	A	C	2B	R7039	B	C	2D	RA102	A	C	6B	ZP22-4	A	C	5E
R139	B	C	4C	R2026	B	C	5A	R4262	A	C	7D	R6022	A	C	2B	R7040	B	C	2C	RA103	A	C	6B	ZP22-5	B	C	5E
R140	B	C	6B	R2027	B	C	5A	R4501	B	C	7B	R6023	A	C	2B	R7042	B	C	2C	RA104	A	C	6B	ZP22-8	A	C	5E
R141	B	C	6B	R2028	A	C	4A	R4502	B	C	7B	R6103	A	C	5C	R7043	B	C	2C	RA105	A	C	6B	ZP22-9	B	C	5E
R142	A	C	2A	R2030	B	C	5A	R4503	B	C	7B	R6104	A	C	3A	R7044	B	C	2C	RA106	B	C	6A	ZP2-4	B	C	2A
R143	A	C	6A	R2031	A	C	5A	R4504	B	C	7B	R6105	B	C	3B	R7045	B	C	2C	RA107	B	C	6A	ZP2-5	B	C	4B
R144	A	C	6A	R2032	A	C	6D	R4505	B	C	7B	R6203	B	C	4B	R7046	A	C	2C	RA108	B	C	5A	ZP25-14	A	C	4A
R145	B	C	6A	R2051	B	C	1B	R4506	B	C	7B	R6204	B	C	2B	R7049	A	C	2C	RA109	A	C	4D	ZP25-5	A	C	1B
R146	B	C	6A	R2052	B	C	1C	R4507	B	C	7B	R6303	B	C	3B	R7050	A	C	2C	RA4001	A	C	5C	ZP2-6	A	C	1A
R147	B	C	6A	R2071	B	C	5A	R4508	B	C	7B	R6304	A	C	3B	R7051	A	C	2C	RA4002	A	C	5C	ZP2-7	B	C	1A
R148	B	C	6A	R2072	A	C	5A	R4514	B	C	7B	R6305	B	C	3B	R7053	A	C	2C	RA4003	A	C	5C	ZP27-1	B	C	6C
R149	A	C	5B	R2401	B	C	6C	R4515	B	C	7B	R6306	A	C	7A	R7054	A	C	2C					ZP27-2	B	C	6B
R150	B	C	2A	R2402	B	C	6C	R4701	A	C	5D	R6307	A	C	7A	R7055	A	C	2C	**TEST POINT**				ZP2-8	A	C	1A
R151	B	C	2A	R2403	B	C	6C	R4702	A	C	6D	R6309	B	C	3D	R7056	A	C	2C	TP101	A	C	5B	ZP28-1	B	C	1B
R152	B	C	5D	R3001	B	C	4B	R4703	A	C	6D	R6310	B	C	3D	R7057	A	C	2C	TP102	B	C	6B	ZP28-10	B	C	1A
R153	B	C	6B	R3002	A	C	3C	R4704	A	C	5D	R6311	B	C	3D	R7058	A	C	2C	TP7001	A	C	3C	ZP28-11	B	C	2B
R158	B	C	6A	R3004	A	C	3C	R4705	A	C	5C	R6312	B	C	3D	R7061	B	C	3D	TP7002	A	C	3C	ZP28-12	A	C	1A
R159	A	C	2C	R3006	A	C	3C	R4706	A	C	5C	R6403	B	C	3A	R7062	B	C	3D	TP7003	A	C	2C	ZP28-13	B	C	1B
R160	A	C	4D	R3007	A	C	3C	R4707	A	C	5D	R6404	B	C	3A	R7067	B	C	2C	TP7005	A	C	2B	ZP28-2	B	C	1B
R1601	B	C	7D	R3008	B	C	4C	R4708	B	C	1C	R6406	A	C	1B	R7068	B	C	2C	TP7007	A	C	2C	ZP28-3	B	C	1B
R1602	B	C	7D	R3009	A	C	6A	R4709	B	C	1D	R6407	B	C	3A	R7069	B	C	2C	TP7008	A	C	2D	ZP28-4	B	C	1A
R1603	A	C	7D	R3010	A	C	6A	R4710	B	C	1C	R6503	B	C	4A	R7070	B	C	2C	TP7009	A	C	2C	ZP28-5	B	C	6B
R1604	A	C	7D	R3014	B	C	4C	R4711	A	C	5D	R6504	B	C	3A	R7071	B	C	2C	TP7011	A	C	2C	ZP28-6	B	C	1B
R1605	A	C	7E	R3015	B	C	4C	R4712	A	C	5C	R6506	B	C	2A	R7072	A	C	2C					ZP28-7	B	C	2A
R1606	A	C	7E	R3016	B	C	4C	R4713	A	C	5C	R6507	B	C	3A	R7073	A	C	2C	**OTHER**				ZP28-8	B	C	2A
R1607	A	C	7D	R3017	B	C	4C	R4714	A	C	5D	R6603	B	C	2A	R7074	B	C	2C	F6001	A	C	1A	ZP28-9	B	C	1A
R1608	B	C	6E	R3018	B	C	4C	R4715	A	C	2D	R6604	B	C	2A	R7077	A	C	3D	F6002	B	C	3D	ZP2-9	B	C	2A
R1609	B	C	6E	R3022	B	C	4C	R4716	B	C	1C	R6605	B	C	2A	R7078	A	C	3D	F6003	B	C	3D	ZP4-1	B	C	7A
R161	B	C	4B	R3023	B	C	4C	R4717	B	C	1C	R6606	B	C	2A	R7079	A	C	3D	FL4701	B	C	2B	ZP4-2	B	C	7D
R1610	B	C	6E	R3027	A	C	5B	R4718	B	C	1D	R6607	A	C	3A	R7080	A	C	3D	FL4702	B	C	2C	ZP4-5	B	C	7A
R1611	B	C	6E	R3028	A	C	4B	R4719	B	C	1C	R6608	A	C	3A	R7081	A	C	3D	J101	A	D	7C	ZP4-6	B	C	7A
R1612	A	C	7D	R3029	A	C	4D	R4720	B	C	1B	R6609	A	C	3A	R7082	A	C	3D	J4001	A	C	4B	ZP504-1	B	C	1B
R1613	A	C	7E	R3030	A	C	4D	R4721	B	C	1C	R6610	A	C	3A	R7083	A	C	3C	J4002	A	C	4B	ZP504-2	B	C	1B
R1614	A	C	7E	R3031	A	C	4D	R4722	B	C	1B	R6611	A	C	3A	R7084	A	C	3C	J504	A	D	1C	ZP504-3	B	C	1C
R1615	B	C	7E	R3034	A	C	4D	R4723	B	C	1D	R6612	A	C	3A	R7085	A	C	3C	J505	A	D	1D	ZP504-4	B	C	1C
R1616	B	C	7E	R3038	A	C	3C	R4724	B	C	2B	R6613	A	C	2A	R7086	B	C	3C	JP2001	A	C	6D	ZP504-5	B	C	1B
R1617	B	C	7E	R3501	A	C	5D	R4725	B	C	2B	R6614	B	C	2B	R7088	B	C	3C	JP2002	A	C	6C	ZP505-1	B	C	1D
R1618	A	C	7D	R3502	A	C	4A	R4726	A	C	2B	R6616	A	C	3A	R7089	A	C	3C	JP2003	A	C	4A	ZP505-2	B	C	1D
R1619	A	C	7E	R3504	B	C	5A	R4727	A	C	1C	R6621	B	C	3C	R7090	A	C	3C	JP2004	A	C	5A	ZP505-3	B	C	1C
R162	A	C	6A	R3505	B	C	5A	R4728	A	C	2B	R6622	B	C	3B	R7091	B	C	3C	JP2005	A	C	6D	ZP505-4	B	C	1D
R1620	A	C	7D	R3506	A	C	5A	R4729	B	C	2C	R6623	B	C	3B	R7093	B	C	3C	JP3501	A	C	4B	ZP7-1	A	C	5D
R1621	B	C	7D	R3507	A	C	4B	R4730	B	C	2B	R6624	B	C	3C	R7094	A	C	3C	PC0539	A	C	7A	ZP7-10	A	C	6C
R1622	B	C	7D	R3508	A	C	4A	R4731	A	C	2B	R6625	B	C	3B	R7095	A	C	3C	PC0559	A	C	7A	ZP7-11	B	C	6B
R1623	B	C	7D	R3901	A	C	4A	R4732	A	C	1B	R6626	B	C	3B	R7096	B	C	3C	PC0573	A	C	4A	ZP7-2	A	C	5D
R1624	A	C	7D	R3902	A	C	4A	R4733	A	C	2C	R6627	B	C	3B	R7098	B	C	3C	TL1601	A	C	7D	ZP7-3	A	C	6C
R1625	A	C	7D	R3903	A	C	4A	R4734	B	C	2B	R6701	A	C	3A	R7099	A	C	3D	TL1602	A	C	7D	ZP7-4	A	C	6D
R1626	A	C	7D	R4001	B	C	6C	R4735	A	C	1D	R6702	B	C	4A	R7100	A	C	3D	TL1603	A	C	7D	ZP7-5	A	C	6C
R1627	A	C	7D	R4002	B	C	6C	R4736	B	C	1D	R6703	A	C	2A	R7101	A	C	3D	TL1605	A	C	7D	ZP7-6	A	C	6C
R1628	A	C	7D	R4003	B	C	6C	R4737	B	C	1C	R6704	A	C	2A	R7102	B	C	3D	TL1606	A	C	7E	ZP7-7	A	C	6C
R1629	A	C	7D	R4004	B	C	6C	R4738	B	C	1C	R6706	A	C	2A	R7103	B	C	3D	TM1	A	C	1A	ZP7-8	A	C	6D
R163	A	C	4D	R4006	B	C	6C	R4739	B	C	1C	R6707	A	C	3A	R7110	A	C	3C	TM2	A	C	1A	ZP7-9	B	C	6C
R1630	A	C	7D	R4007	B	C	6D	R4741	B	C	1D	R6708	A	C	3A	R7111	A	C	3C	TM4	A	C	7A	ZP8-1	A	C	6A
R1631	A	C	7D	R4008	B	C	6D	R4742	B	C	1C	R6709	A	C	3A	R7112	A	C	3C	TM5	A	C	7A	ZP8-2	A	C	5A
R1632	B	C	7D	R4009	B	C	6D	R4743	B	C	1C	R6710	B	C	1B	R7114	B	C	3C	X101	A	C	6A				
R1633	B	C	7D	R4010	B	C	6D	R4744	B	C	1C	R6711	B	C	1B	R7115	A	C	3C	X102	B	C	7A				
R164	A	C	5B	R4035	B	C	6C	R4745	B	C	1C	R6712	A	C	3A	R7116	A	C	3C	X3001	A	D	4B				
R165	B	C	7C	R4036	B	C	6C	R4746	B	C	1C	R6713	B	C	2B	R7118	B	C	3C	ZP101-1	A	C	6A				
R166	B	C	7C	R4037	B	C	6B	R4747	B	C	1C	R6714	B	C	2B	R7119	A	C	3C	ZP1-1	B	C	7D				
R167	A	C	7A	R4038	B	C	4B	R4748	A	C	6C	R6801	B	C	2A	R7120	A	C	3C	ZP1-10	A	C	7A				
R168	A	C	7A	R4201	A	C	7C	R504	A	C	1A	R6803	B	C	2A	R7122	B	C	3C	ZP11-14	A	C	3D				
R169	B	C	7A	R4202	A	C	7C	R505	A	C	1A	R6804	B	C	2A	R7123	A	C	3C	ZP12-1	A	C	3C				
R170	A	C	7A	R4203	A	C	7C	R5201	B	C	6E	R6810	A	C	2B	R7124	B	C	3C	ZP12-3	B	C	3D				
R171	B	C	6B	R4204	A	C	7C	R5202	B	C	5E	R6811	B	C	2A	R7127	A	C	3C	ZP12-4	B	C	3D				
R172	A	C	4D	R4205	B	C	7C	R5203	A	C	3C	R6813	A	C	2A	R7128	B	C	3C	ZP12-5	B	C	2C				
R173	A	C	5B	R4206	B	C	7C	R5204	A	C	3B	R6814	A	C	2A	R7129	A	C	3C	ZP1-3	B	C	5A				
R174	A	C	5B	R4207	B	C	7C	R5211	B	C	6E	R6820	A	C	2B	R7130	B	C	3C	ZP13-10	B	C	3B				
R175	A	C	5B	R4208	B	C	7C	R5212	A	C	5E	R6911	B	C	3B	R7131	A	C	3C	ZP13-11	B	C	3C				
R176	B	C	3A	R4209	B	C	7C	R5213	B	C	5D	R6921	B	C	4B	R7132	B	C	3C	ZP13-12	B	C	3C				
R177	B	C	4B	R4210	B	C	7C	R5214	B	C	5D	R6931	B	C	3B	R7137	A	C	3C	ZP13-5	B	C	6B				
R180	A	C	5B	R4211	B	C	7C	R5215	A	C	5D	R6941	B	C	3A	R7138	B	C	3C	ZP1-5	B	C	7D				
R182	B	C	5A	R4212	A	C	7C	R5216	B	C	5E	R6951	B	C	3A	R7139	A	C	3C	ZP16-10	B	C	6B				
R183	B	C	5A	R4213	A	C	7C	R5217	A	C	5E	R6961	B	C	3B	R7141	B	C	3C	ZP16-7	B	C	6B				

COMPONENT SIDE (A)

0 1 MAIN PWB
YB10310-01-03

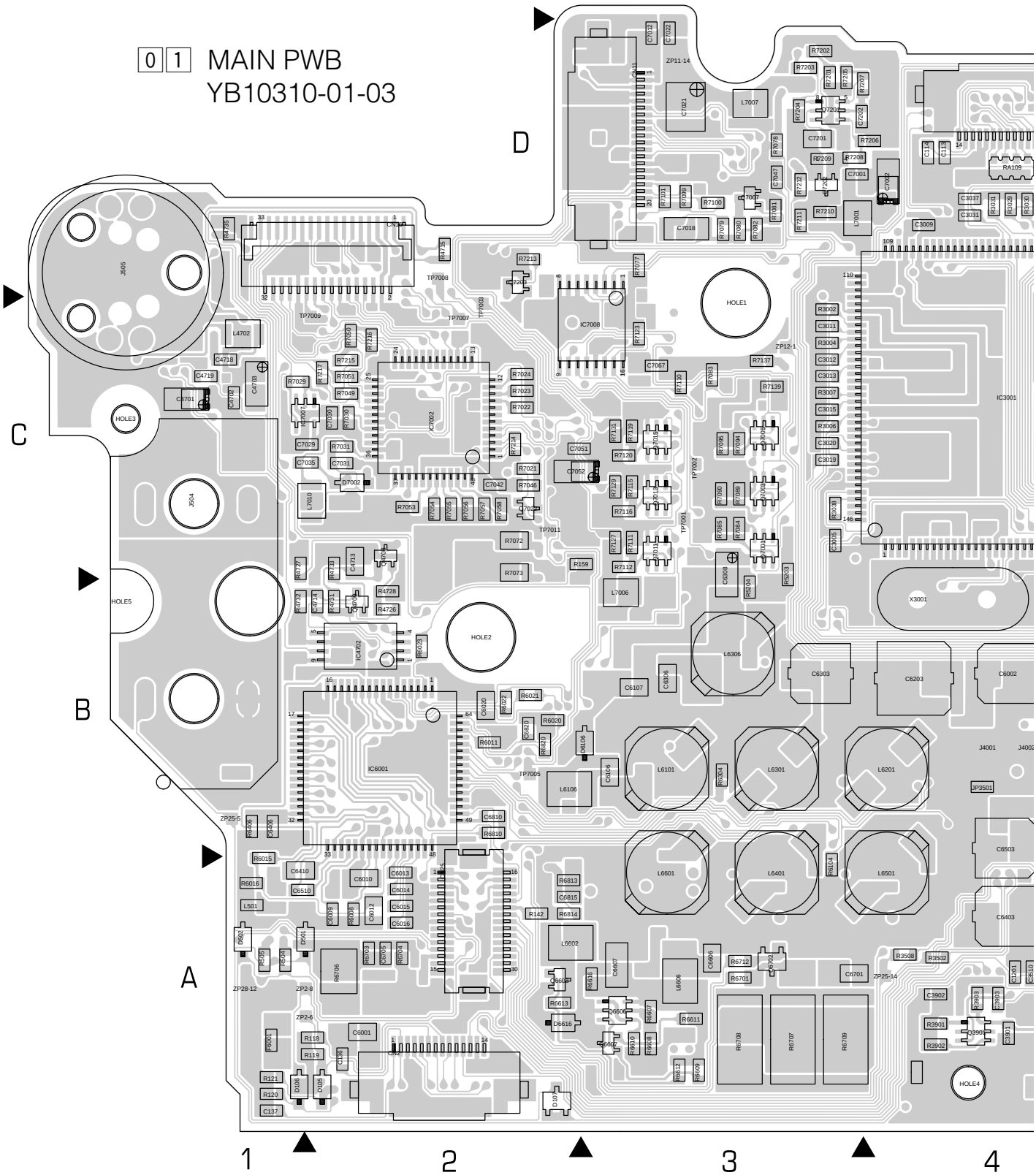

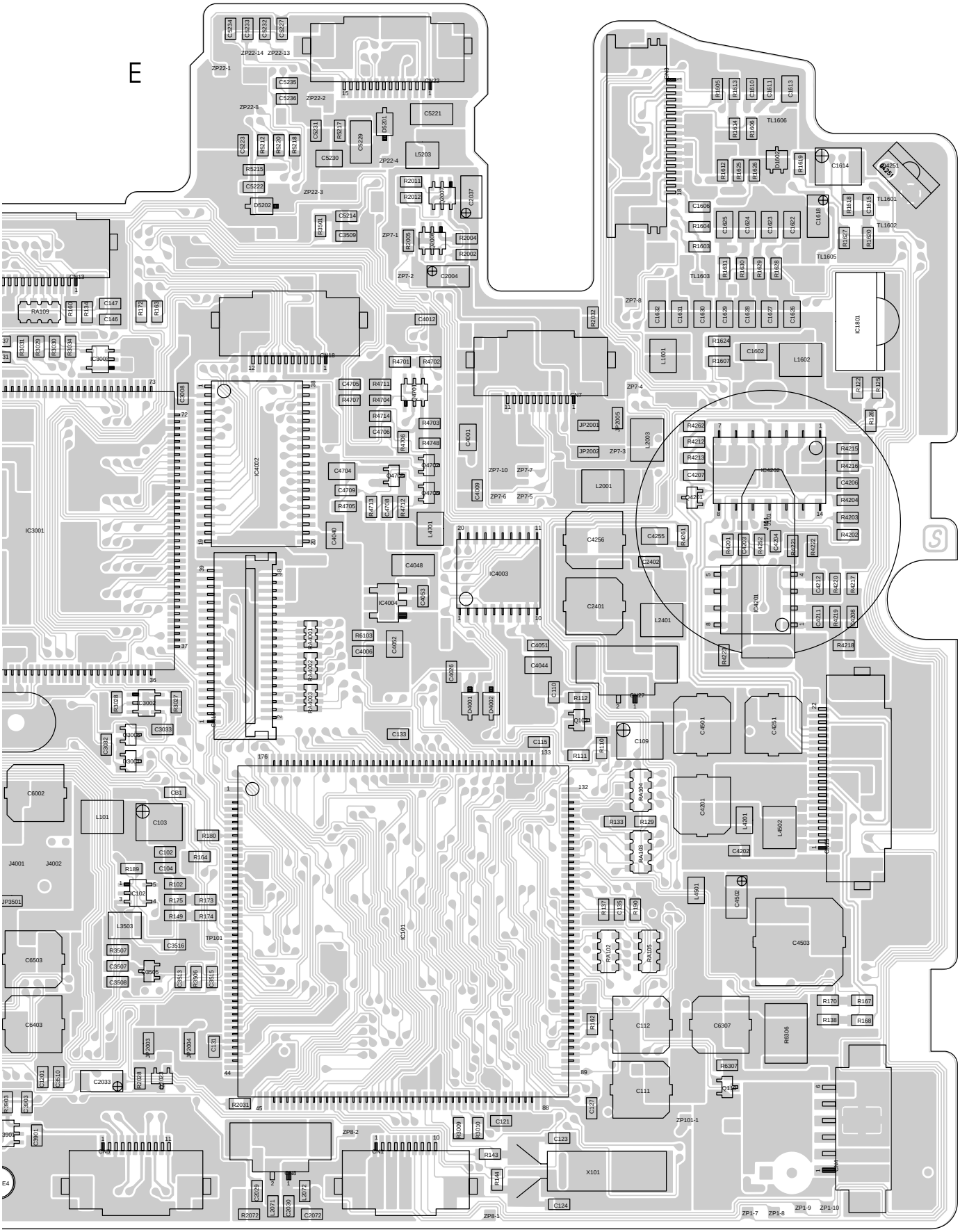
E
4
5
6
7

JVC

GR-AXM230U/SXM330U/SXM930U

No. 86595

JVC SERVICE & ENGINEERING COMPANY OF AMERICA

DIVISION OF JVC AMERICAS CORP.

Head office	:	1700 Valley Road Wayne, New Jersey 07470-9976	(973)315-5000
East Coast	:	10 New Maple Avenue Pine Brook, New Jersey 07058-9641	(973)396-1000
Midwest	:	705 Enterprise Street Aurora, Illinois 60504-8149	(630)851-7855
West Coast	:	5665 Corporate Avenue Cypress, California 90630-0024	(714)229-8011
Atlanta	:	1500 Lakes Parkway Lawrenceville, Georgia 30043-5857	(770)339-2582
Hawaii	:	2969 Mapunapuna Place Honolulu, Hawaii 96819-2040	(808)833-5828

JVC CANADA INC.

Head office	:	21 Finchdene Square Scarborough, Ontario M1X 1A7	(416)293-1311
Montreal	:	16800 Rte Trans-Canadienne, Kirkland, Quebec H9H 5G7	(514)871-1311
Vancouver	:	13040 Worster Court Richmond, B.C. V6V 2B3	(604)270-1311

JVC

S40895-03

Printed in Japan

JVC

SERVICE MANUAL

COMPACT VHS CAMCORDER

GR-AXM230U/SXM330U/SXM930U

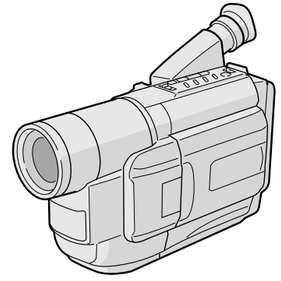

DIGITAL STILL CAMERA

S-VHS C

Super VHS

Super VHS ET

SPECIFICATIONS *(The specifications shown pertain specifically to the model GR-SXM930)*

Camcorder

General

Format : S-VHS/VHS NTSC standard

Power source : DC 11 V ⎓ (Using AC Adapter)
DC 6 V ⎓ (Using battery pack)

Power consumption
- **Viewfinder on** : 4.7 W
- **LCD monitor on** : 5.4 W
- **Video light** : 3.0 W

Signal system : NTSC-type

Video recording system
- **Luminance** : FM recording
- **Color** : Converted sub-carrier direct recording Conforms to VHS standard

Cassette : S-VHS C / VHS C cassette

Tape speed
- **SP** : 33.35 mm/sec. (1-5/16 ips)
- **EP** : 11.12 mm/sec. (7/16 ips)

Recording time (max.)
- **SP** : 40 minutes
- **EP** : 120 minutes (with TC-40)

D.S.C. format
- **Recording format** : Digital data storage (based on JPEG)
- **Recording medium** : Built-in flash memory, 2 Mbyte

Number of storable shots
- **FINE mode** : approx. 30 shots
- **STANDARD mode** : approx. 60 shots
- **Image size** : 640 x 480 pixels (when captured on a PC)

Operating temperature : 0°C to 40°C (32°F to 104°F)

Operating humidity : 35% to 80%

Storage temperature : –20°C to 50°C (–4°F to 122°F)

Weight : Approx. 930 g (2.1 lbs)

Dimensions : 206 mm x 112 mm x 118 mm (8-1/8" x 4-7/16" x 4-11/16") (with the LCD monitor closed and with the viewfinder fully tilted downward)

Pickup : 1/4" format CCD

Lens : F1.6, f = 3.9 mm to 62.4 mm, 16:1 power zoom lens with auto iris and macro control, filter diameter 40.5 mm

Viewfinder : Electronic viewfinder with 0.55" color LCD

White balance adjustment : Auto/Manual adjustment

LCD monitor : 3" diagonally measured, LCD panel/TFT active matrix system

Speaker : Monaural

Connectors

Video : 1 V (p-p), 75 Ω unbalanced, analog output (via Video output connector)

Audio : 300 mV (rms), 1 kΩ analog output (via Audio output connector)

Digital : ø2.5 mm, 4-pole, mini-head jack

S-Video : **Y** : 1 V (p-p), 75 Ω, analog output
C : 0.29 V (p-p), 75 Ω, analog output

AC Adapter AP-V10U

Power requirement
- **U.S.A. and Canada** : AC 120 V~, 60 Hz
- **Other countries** : AC 110 V to 240 V~, 50 Hz/60 Hz

Output : DC 11 V ⎓, 1 A

Dimensions (W x H x D) : 59 mm x 31 mm x 69 mm (2-3/8" x 1-1/4" x 2-3/4")

Weight : Approx. 130 g (0.29 lbs)

Optional Accessories

- **Battery Packs BN-V12U, BN-V20U, BN-V400U**
- **A/V (Audio/Video) Cable**
- **S-Video Cable QAM0004-004**
- **Compact S-VHS (S-VHS C) Cassettes ST-C-40/30/20**
- **Compact VHS (VHS C) Cassettes TC-40/30/20**
- **Active Carrying Bag CB-V7U**

Some accessories are not available in some areas. Please consult your nearest JVC dealer for details on accessories and their availability.

Specifications shown are for SP mode unless otherwise indicated. E & O.E. Design and specifications subject to change without notice.

This service manual is printed on 100% recycled paper.

COPYRIGHT © 2000 VICTOR COMPANY OF JAPAN, LTD.

No. 86595
November 2000

TABLE OF CONTENTS

Section	Title	Page
	Important Safety Precautions	
	INSTRUCTIONS	
1.	**DISASSEMBLY**	
1.1	SERVICE CAUTIONS	1-1
1.1.1	Precautions	1-1
1.1.2	How to read the disassembly and assembly	1-1
1.1.3	Connection of the wires	1-1
1.2	TOOLS REQUIRED FOR ADJUSTMENTS	1-2
1.3	DISASSEMBLY/ASSEMBLY OF CABINET PARTS	1-3
1.3.1	Disassembly flow chart	1-3
1.3.2	Disassembly method	1-3
1.4	DISASSEMBLY/ASSEMBLY OF CAMERA SECTION AND DECK SECTION	1-9
1.4.1	Flowchart of disassembly	1-9
1.4.2	Disassembly method	1-9
1.5	REPLACEMENT OF CCD IMAGE SENSOR	1-12
1.5.1	Removal of CCD image sensor	1-12
1.5.2	Installation of new CCD image sensor	1-12
1.5.3	Replacement of CCD board assy	1-12
1.6	TAKE OUT CASSETTE TAPE	1-13
1.7	EMERGENCY DISPLAY	1-14
1.8	DEMONSTRATION MODE	1-14
1.9	SERVICE NOTE	1-16
2.	**MECHANISM ADJUSTMENT**	
2.1	SERVICE CAUTIONS	2-1
2.1.1	Precautions	2-1
2.1.2	How to read the disassembly and assembly (For Mechanism Parts)	2-1
2.1.3	Required adjustment tools	2-1
2.2	DISASSEMBLY/ASSEMBLY OF MECHANISM PARTS	2-2
2.3	CHECKUP AND ADJUSTMENT OF MECHANISM PHASE	2-6
2.4	TAPE TRANSPORT ADJUSTMENT	2-7
2.4.1	Back tension	2-7
2.4.2	Tape pattern	2-7
2.4.3	A/CTL head height & azimuth	2-8
2.4.4	Phase of control head (X value)	2-9
2.5	REMARKS	2-9
2.5.1	Cleaning	2-9
2.5.2	Applying oil and grease	2-9
2.5.3	Checkup	2-9
2.6	JIG CONNECTOR CABLE CONNECTION	2-10
3.	**ELECTRICAL ADJUSTMENT**	
3.1	ELECTRICAL ADJUSTMENT	3-1
3.1.1	PREPARATION	3-1
3.2	MONITOR ADJUSTMENT	3-3
3.2.1	V COM	3-3
3.3	ELECTRONIC VIEWFINDER (E. VF) ADJUSTMENT	3-4
3.3.1	Tilt	3-4
3.3.2	Centering	3-4
3.3.3	Vertical scanning	3-4
3.3.4	Brightness	3-4
3.3.5	Focus	3-4
4.	**CHARTS AND DIAGRAMS**	
	NOTES OF SCHEMATIC DIAGRAM	4-1
	CIRCUIT BOARD NOTES	4-2
4.1	BOARD INTERCONNECTIONS	4-3
4.2	CPU SCHEMATIC DIAGRAM	4-5
4.3	VTR ASP SCHEMATIC DIAGRAM	4-7
4.4	MECHA MDA SCHEMATIC DIAGRAM	4-9
4.5	VTR DSP SCHEMATIC DIAGRAM	4-11
4.6	DSP SCHEMATIC DIAGRAM	4-13
4.7	IRIS & AF/ZOOM SCHEMATIC DIAGRAM	4-15
4.8	VIDEO OUT SCHEMATIC DIAGRAM	4-17
4.9	REGULATOR SCHEMATIC DIAGRAM	4-19
4.10	LCD CTL SCHEMATIC DIAGRAM (FOR AXM230/SXM330)	4-21
4.11	LCD CTL SCHEMATIC DIAGRAM (FOR SXM930)	4-23
4.12	JACK AND CCD SCHEMATIC DIAGRAMS	4-25
4.13	SPEAKER AND MONITOR SCHEMATIC DIAGRAMS	4-27
4.14	C-VF BL SENSOR SCHEMATIC DIAGRAM	4-29
4.15	DSC SCHEMATIC DIAGRAM	4-31
4.16	TOP OPE UNIT, ZOOM UNIT, REAR UNIT AND SENSOR SCHEMATIC DIAGRAMS	4-33
4.17	ELECTRONIC VIEWFINDER SCHEMATIC DIAGRAM	4-35
4.18	MAIN CIRCUIT BOARD	4-37
4.19	CCD AND C-VF BL CIRCUIT BOARDS	4-43
4.20	MONITOR CIRCUIT BOARD	4-45
4.21	DSC CIRCUIT BOARD	4-47
4.22	ELECTRONIC VIEWFINDER CIRCUIT BOARD	4-49
4.23	POWER SYSTEM BLOCK DIAGRAM	4-51
4.24	CPU/MDA SYSTEM BLOCK DIAGRAM	4-53
4.25	CAMERA SYSTEM BLOCK DIAGRAM	4-55
4.26	Y/C SYSTEM BLOCK DIAGRAM	4-59
4.27	MONITOR SYSTEM BLOCK DIAGRAM	4-61
4.28	WAVEFORMS	4-63
4.29	VOLTAGE CHARTS	4-64
5.	**PARTS LIST**	
5.1	PACKING AND ACCESSORY ASSEMBLY <M1>	5-1
5.2	FINAL ASSEMBLY <M2>	5-3
5.3	MECHANISM ASSEMBLY <M3>	5-6
5.4	ELECTRONIC VIEWFINDER ASSEMBLY <M4> (SXM930U/UC)	5-8
5.4	ELECTRONIC VIEWFINDER ASSEMBLY <M4> (AXM230U/UC/SXM330U/UC)	5-9
5.5	MONITOR ASSEMBLY <M5>	5-10
5.6	ELECTRICAL PARTS LIST	5-11
	MAIN BOARD ASSEMBLY <01>	5-11
	CCD BOARD ASSEMBLY <02>	5-18
	C-VF BL BOARD ASSEMBLY <06> E,F	5-19
	MONITOR BOARD ASSEMBLY <07>	5-19
	DSC BOARD ASSEMBLY <08> E,F	5-19
	E. VF BOARD ASSEMBLY <50>	5-20

The following table lists the differing points between Models GR-AXM230U/UC, GR-SXM330U/UC and GR-SXM930U/UC in this series.

	GR-AXM230U	GR-SXM330U	GR-SXM930U
VIEW FINDER	B/W	B/W	COLOR
LCD MONITOR	2.5*	2.5*	3.0*
BODY COLOR	MOLD BLACK	METALLIC GRAY	SILVER
DIGITAL STILL CAMERA	NOT USED	NOT USED	USED
SHUTTER SOUND	NOT USED	NOT USED	USED
SNAP SHOT	NOT USED	USED (FULL ONLY)	USED (FULL & PIN-UP)
NIGHT ALIVE	NOT USED	USED	USED
5SEC REC SW	USED	NOT USED	NOT USED
S-VHS SW	NOT USED	USED	USED
S OUTPUT	NOT USED	USED	USED
PC TERMINAL	NOT USED	NOT USED	USED
RCU UNIT	NOT USED	RM-V715U	RM-V715U
PC CONNECTION CABLE	NOT USED	NOT USED	PROVIDE
CD-ROM	NOT USED	NOT USED	PROVIDE

SECTION 1
DISASSEMBLY

1.1 SERVICE CAUTIONS

1.1.1 Precautions

1. Before disassembling/re-assembling the set as well as soldering parts, make sure to disconnect the power cable.
2. When disconnecting/connecting connectors, pay enough attention to wiring not to damage it.
3. In general, chip parts such as resistor, shorting jumpers (0-ohm resistor), ceramic capacitors, diodes, etc. can not be reused after they were once removed.
4. When installing parts, be careful not to do with other parts as well as not to damage others.
5. When removing ICs, be careful not to damage circuit patterns.
6. Tighten screws properly during the procedures. Unless specified otherwise, tighten screws at torque of 0.196 N·m (2.0 kgf·cm).

1.1.2 How to read the disassembly and assembly

(For Cabinet Parts)

STEP /LOC NO.	PART	Fig. No.	REMOVAL
			*UNLOCK/RELEASE/ UNPLUG/UNCLAMP/ UNSOLDER
①	CASSETTE COVER ASSEMBLY	C1	2(S1)
②	UPPER CASE	C2	2(S2), (L2)
③	LOWER CASE ASSEMBLY(INCL. E. VF. ASSEMBLY)	C3	9(S3), (L3a), (L3b) *CN ③a ③b CAP (RCA jack)

(1) (2) (3) (4)

(1) Order of steps in Procedure
When reassembling, preform the step(s) in the reverse order. These numbers are also used as the identification (location) No. of parts Figures.
(2) Part to be removed or installed.
(3) Fig. No. showing Procedure or Part Location.

C = Cabinet
CA = Camera
D = Deck

(4) Identification of part to be removed, unhooked, unlocked, released, unplugged, unclamped or unsoldered.

P = Spring
W = Washer
S = Screw
* = Unhook, unlock, release, unplug or unsolder.
2(S3) = 2 Screws (S3)
CN = Connector

(5) Adjustment information for installation.

1.1.3 Connection of the wires

1. Pull the connector structure upward to release the clamp when removing or inserting the flat wire cable.

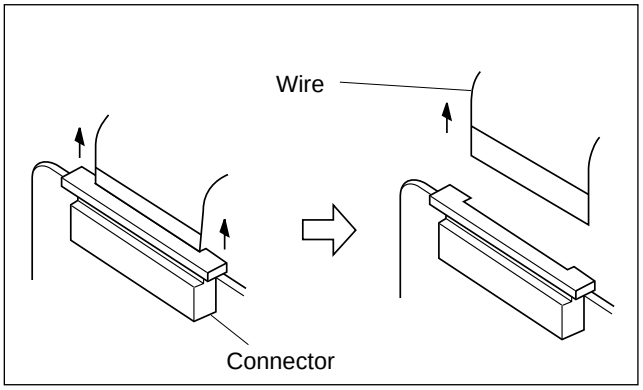

Fig. 1-1-1

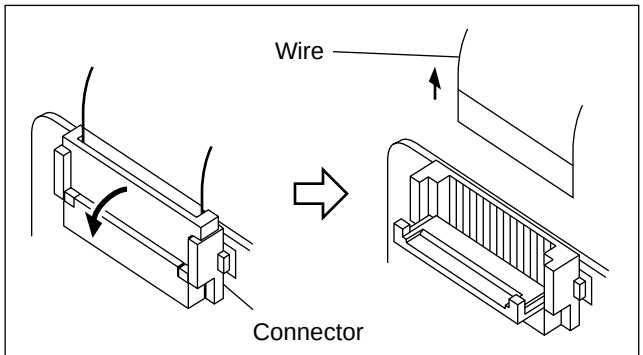

NOTE: *After removing the wire, return the stopper to its original position, because it is apt to come off if it is left open.*

Fig. 1-1-2

1.2 TOOLS REQUIRED FOR ADJUSTMENTS

1 Alignment tape (for SP interchangeability) MHP-C	2 Alignment tape (for N. SP PB Y/C level) MHV-2C
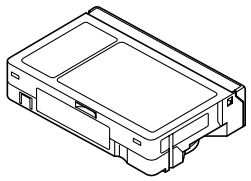	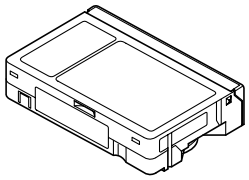
3 Torque driver YTU94088	4 Bit YTU94088-003
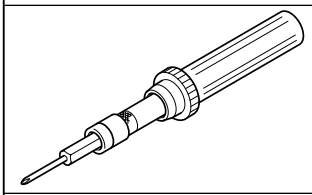	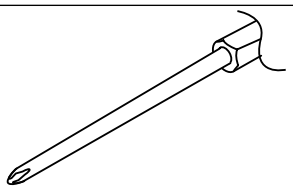
5 INF adjustment lens YTU92001B	6 Conn. ring YTU92001-111
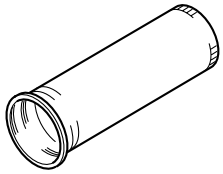	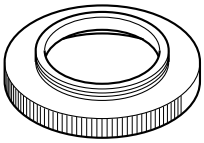
7 Gray Scale Chart YTU94133A	8 Color Bar Chart YTU94133C
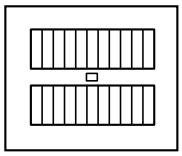	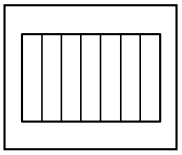
9 INF lens holder YTU94087	10 Light box Assembly YTU93096A
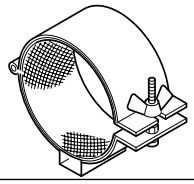	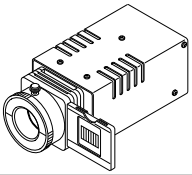
11 Camera stand YTU93079	12 Extension connector YTU94145B-30
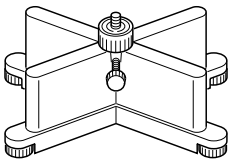	
13 Jig connector cable YTU93106A	14 Service support system software YTU94057-51
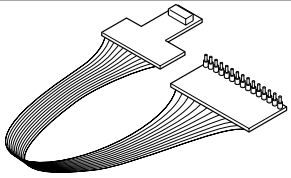	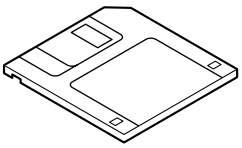

15 PC cable QAM0099-002	16 Cleaning cloth KSMM-01
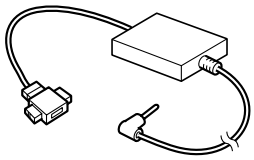	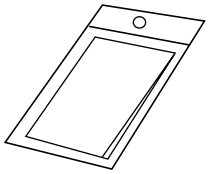

Table 1-2-1

1,2. Alignment tape
To be used for check and adjustment of interchangeability of the mechanism.
(Video: Color bar signal, Audio: Non-signal)

3. Torque driver
Be sure to use to fastening the mechanism and exterior parts because those parts must strictly be controlled for tightening torque.

4. Bit
This bit is slightly longer than those set in conventional torque drivers.

5. INF adjustment lens
To be used for adjustment of the camera system.

6. Conn. ring
The connector ring to attach the INF. lens to the head of the OP lens.

7. Gray scale chart
To be used for adjustment of the camera system.

8. Color bar chart
To be used for adjustment of the camera system.

9. INF lens holder
To be used together with the camera stand (11) for operating the VideoMovie in the stripped-down condition such as the status without the exterior parts or for using commodities that are not yet conformable to the interchangeable ring.

10. Light box assembly
To be used for adjustment of the camera system.

11. Camera stand
To be used together with the INF adjustment lens holder.

12. Extention connector
To be used to JIG connector cable

13. JIG connector cable
Connected to CN25 of the main board and used for measuring error rates, etc.

14. Service support system software
To be used for adjustment with a personal computer.

15. PC cable
To be used to connect the VideoMovie and a personal computer with each other when a personal computer is used for adjustment.

16. Cleaning cloth
Recommended cleaning cloth to wipe down the video heads, mechanism (tape transport system), optical lens surface.

1.3 DISASSEMBLY/ASSEMBLY OF CABINET PARTS

1.3.1 Disassembly flow chart

This flowchart indicates the disassembly step for the cabinet parts and board assembly in order to gain access to item(s) to be serviced. When reassembling, perform the step(s) in reverse order. Bend, route and dress the flat cables as they were originally.

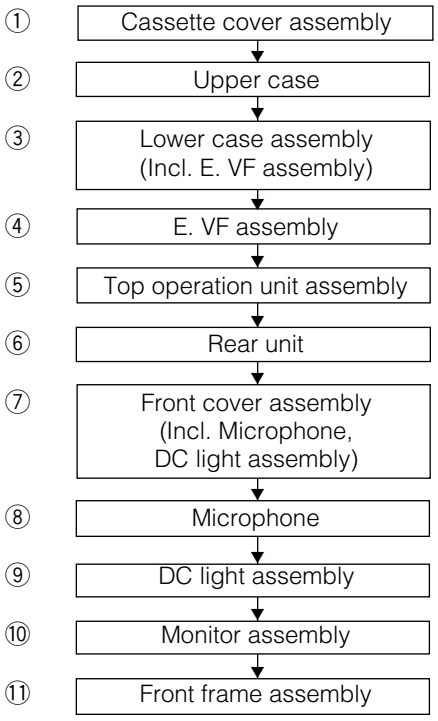

1.3.2 Disassembly method

STEP /LOC NO.	PART	Fig. No.	REMOVAL *UNLOCK/RELEASE/ UNPLUG/UNCLAMP/ UNSOLDER
①	CASSETTE COVER ASSEMBLY	C1	2(S1)
②	UPPER CASE	C2	2(S2), (L2)
③	LOWER CASE ASSEMBLY (INCL. E. VF ASSEMBLY)	C3	9(S3), (L3a), (L3b) *CN (3a) (3b) CAP (RCA jack)
④	E. VF ASSEMBLY	C4	3(S4)
⑤	TOP OPERATION UNIT ASSEMBLY	C5	2(S5), (L5a), (L5b), (L5c) *CN (5a)
⑥	REAR UNIT	C6	3(S6), (L6a), (L6b) *CN (6a)
⑦	FRONT COVER ASSEMBLY (INCL. MIC DC LIGHT ASSEMBLY)	C7	2(S7a), (S7b), (L7a), (L7b) *CN (7a)
⑧	MICROPHONE		(S7a)
⑨	DC LIGHT ASSEMBLY		2(L7c)
⑩	MONITOR ASSEMBLY	C8	2(S8a), (S8b) *CN (8a)
		C9	2(S9a), (S9b), (S9c)
		C10	2(S10a), 2(S10b), 2(S10c), (L10a), (L10b), (L10c)
		C11	(L11a), (L11b), (L11c) *CN (11a) , (11b) , (11c)
		C12	2(S12a), (S12b), 2(L12a)
⑪	FRONT FRAME ASSEMBLY	C13	2(S13)

List of Abbreviations:
2(S1)=2 screws (S1)
4(L1a)=4 Locking Tabs
CN=Connector

Reference Notes:
<NOTE 1>
Destination of connectors

Note: *Two kinds of double-arrows in connection tables respectively show kinds of connector/wires.*
⟺ : Flat wire
↔ : Wire

Connector	No. of Pins	Connector		
(3a)	2	SPEAKER	↔	MAIN CN27
(3b)	20	C-VF BL CN7551	⟺	MAIN CN11
	5	E. VF (B/W)	↔	MAIN CN12
(5a)	12	TOP OPERATION UNIT	⟺	MAIN CN18
(6a)	13	REAR UNIT	⟺	MAIN CN28
(7a)	2	MIC	↔	MAIN CN8
(8a)	33	MONITOR ASSEMBLY	⟺	MAIN CN16
(11a)	28	MONITOR CN7501	⟺	T. HINGE
(11b)	24	MONITOR CN7502	⟺	LCD MODULE
(11c)	2	MONITOR CN7503	↔	BACK LIGHT

<NOTE 2, 3>

(1) The FPC assembly should be winded around the hinge assembly by two and half turns so that the wire to be connected to the monitor board assembly is positioned inside.

(2) The upper and lower hinge covers should be mounted so carefully the any wire is not caught into either of the covers.

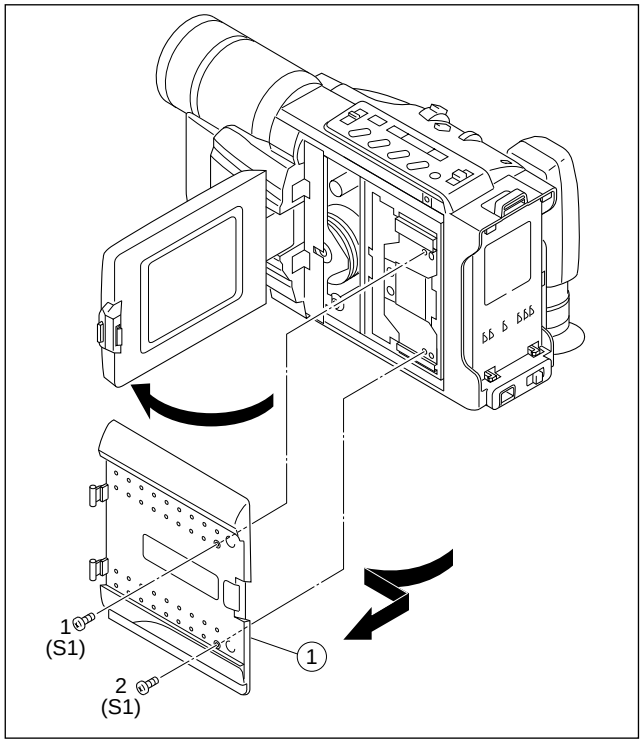

Fig. C1

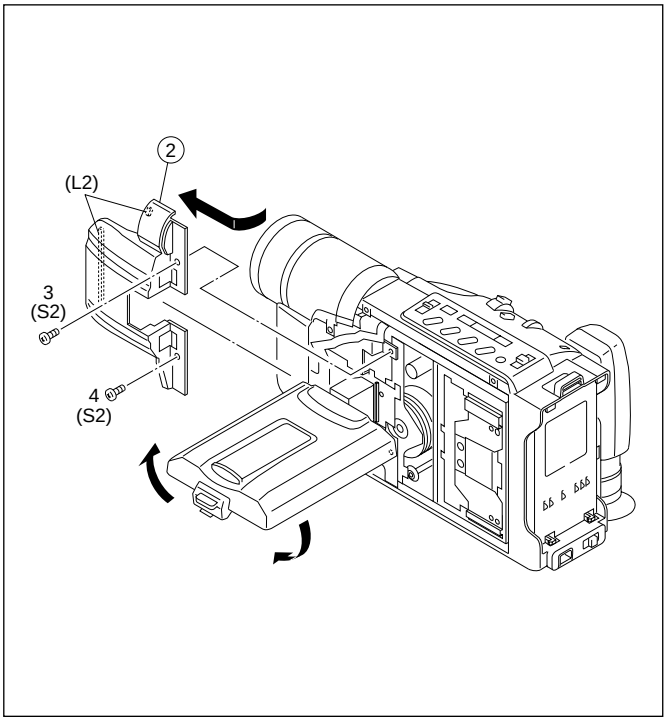

Fig. C2

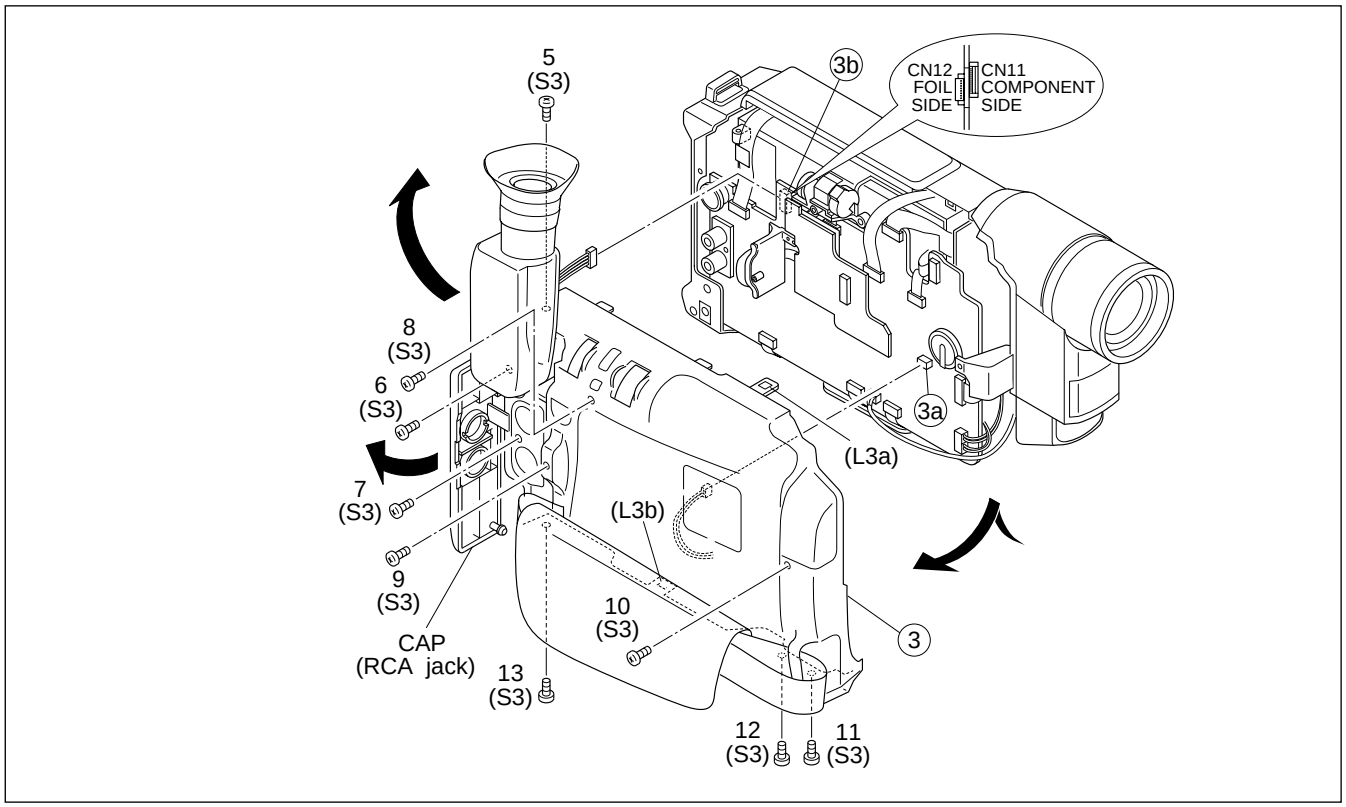

Fig. C3

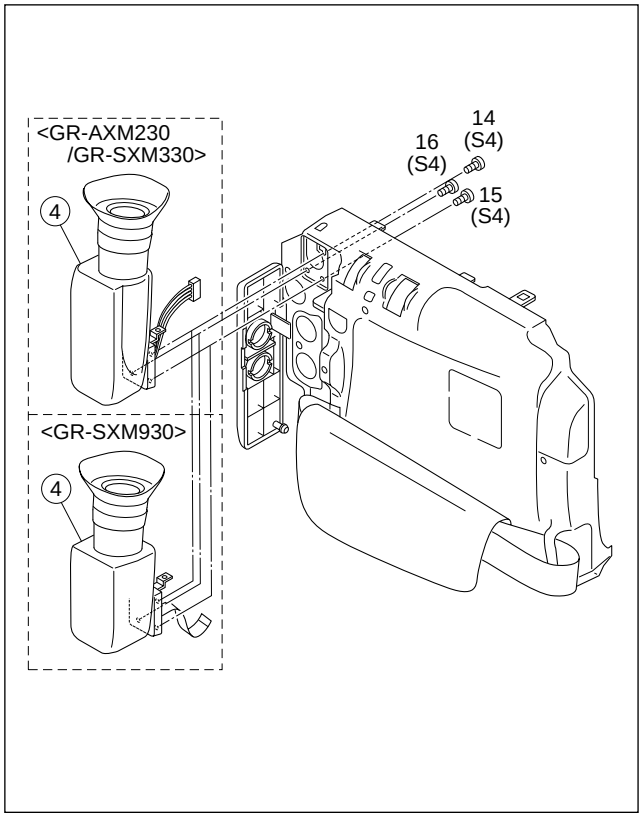

Fig. C4

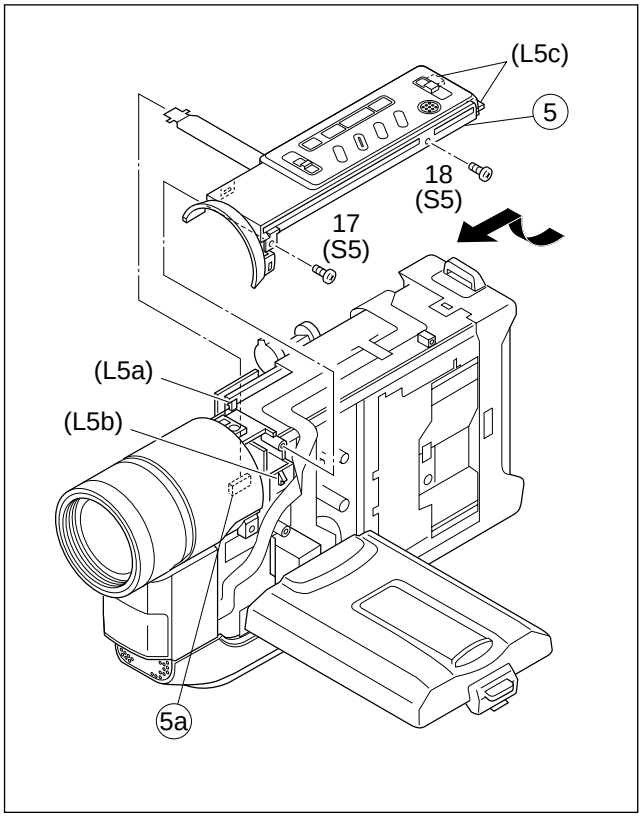

Fig. C5

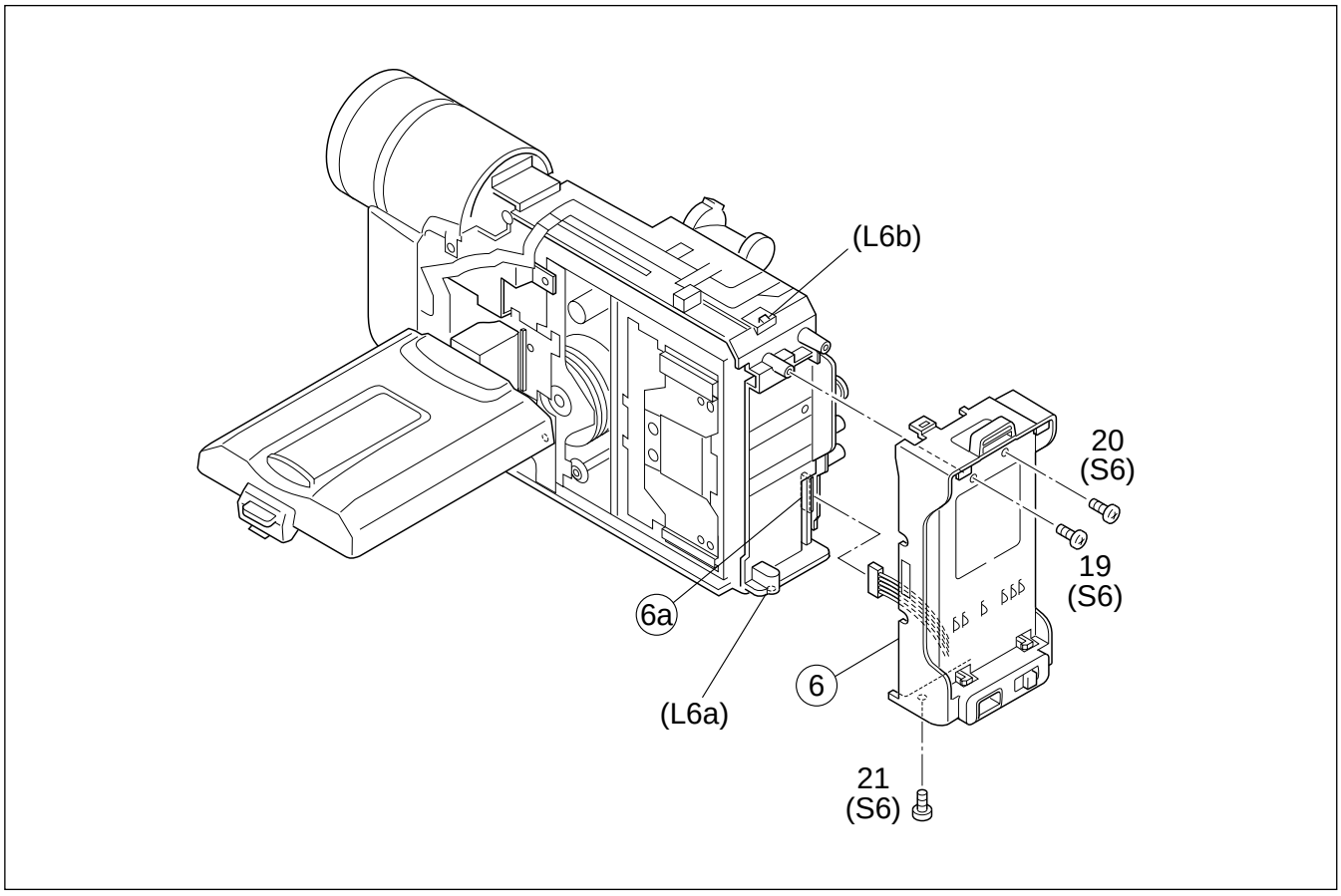

Fig. C6

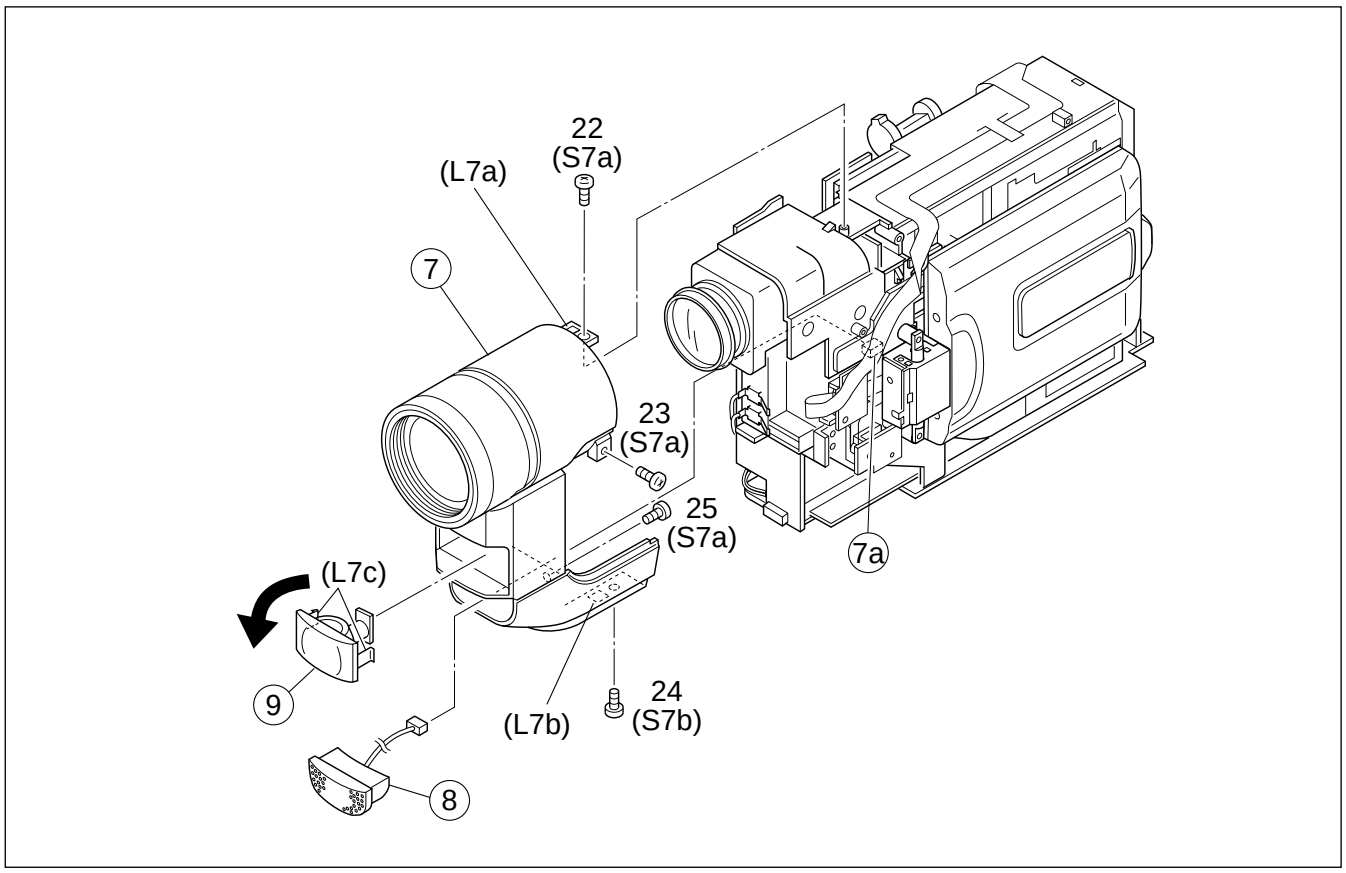
22
(S7a)
(L7a)
7
23
(S7a)
25
(S7a)
7a
(L7c)
9
(L7b)
24
(S7b)
8

Fig. C7

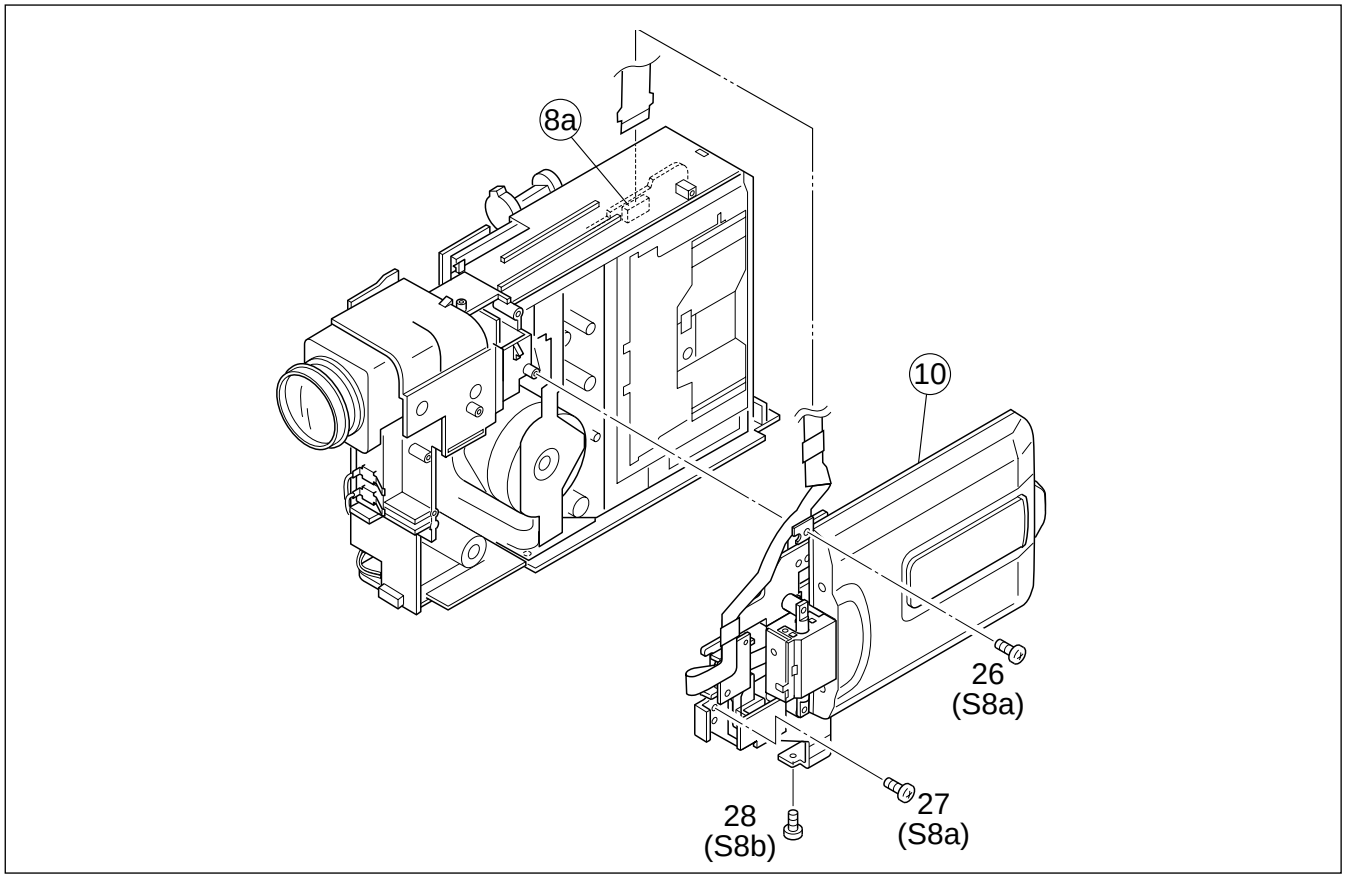
8a
10
26
(S8a)
28
(S8b)
27
(S8a)

Fig. C8

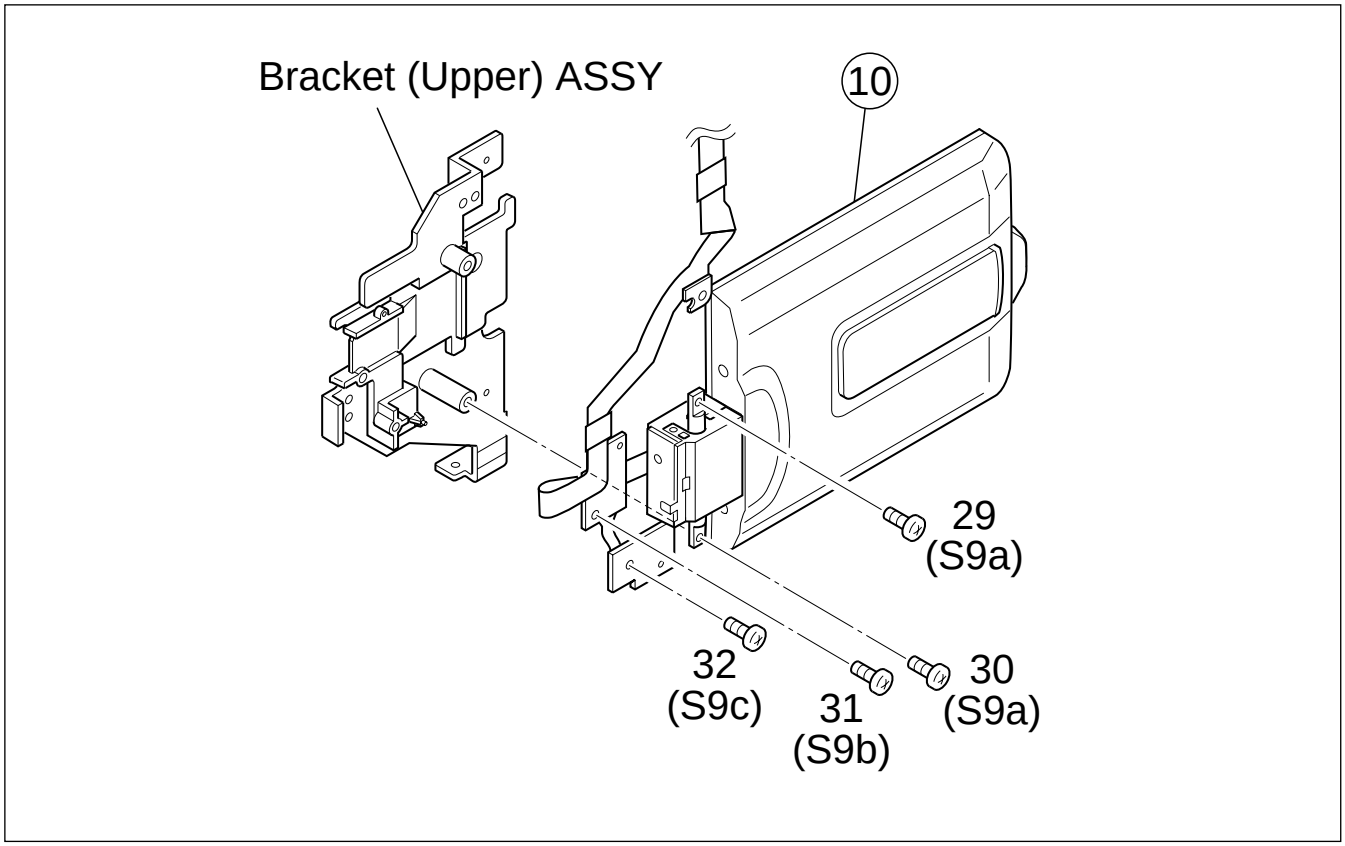

Fig. C9

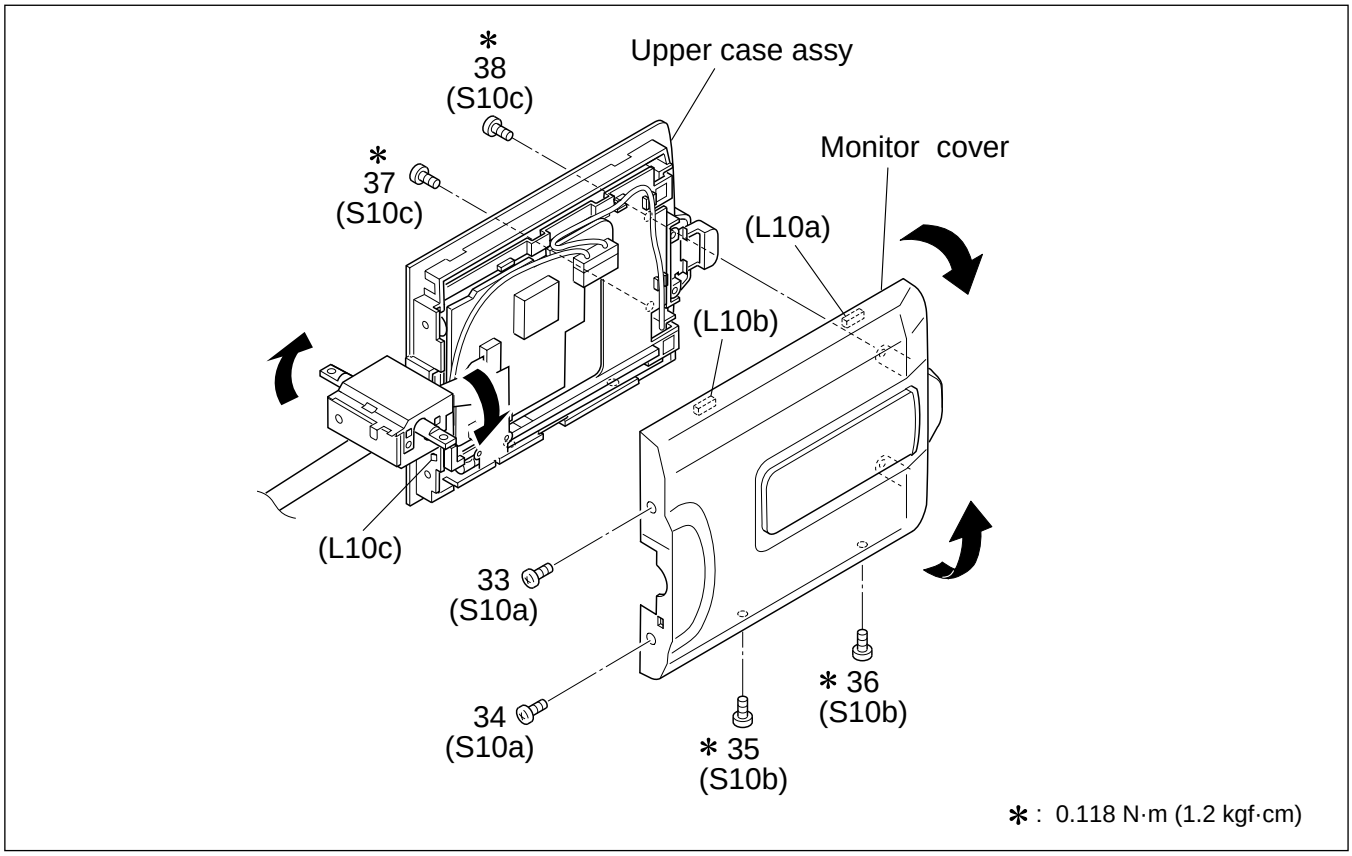

Fig. C10

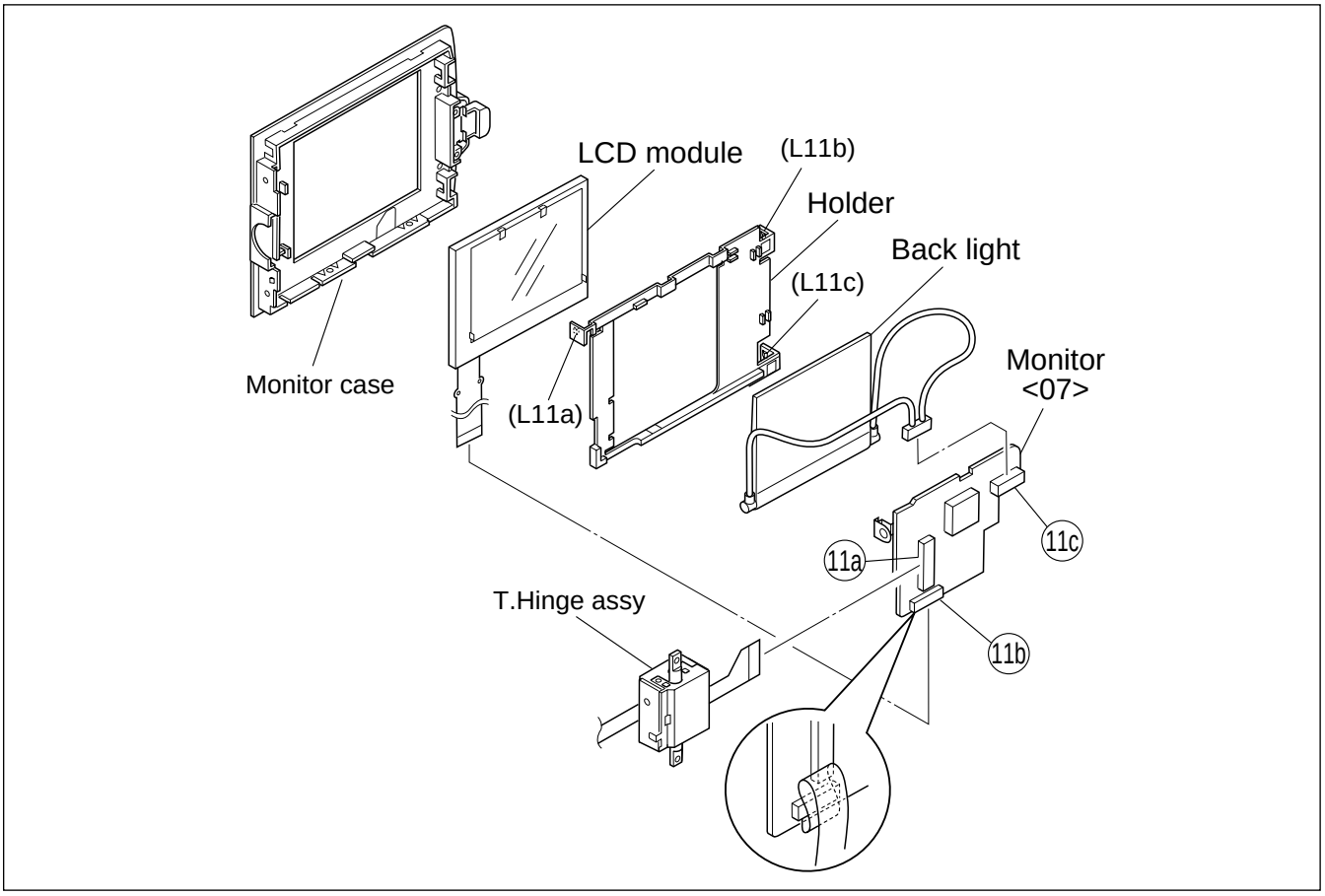

Fig. C11

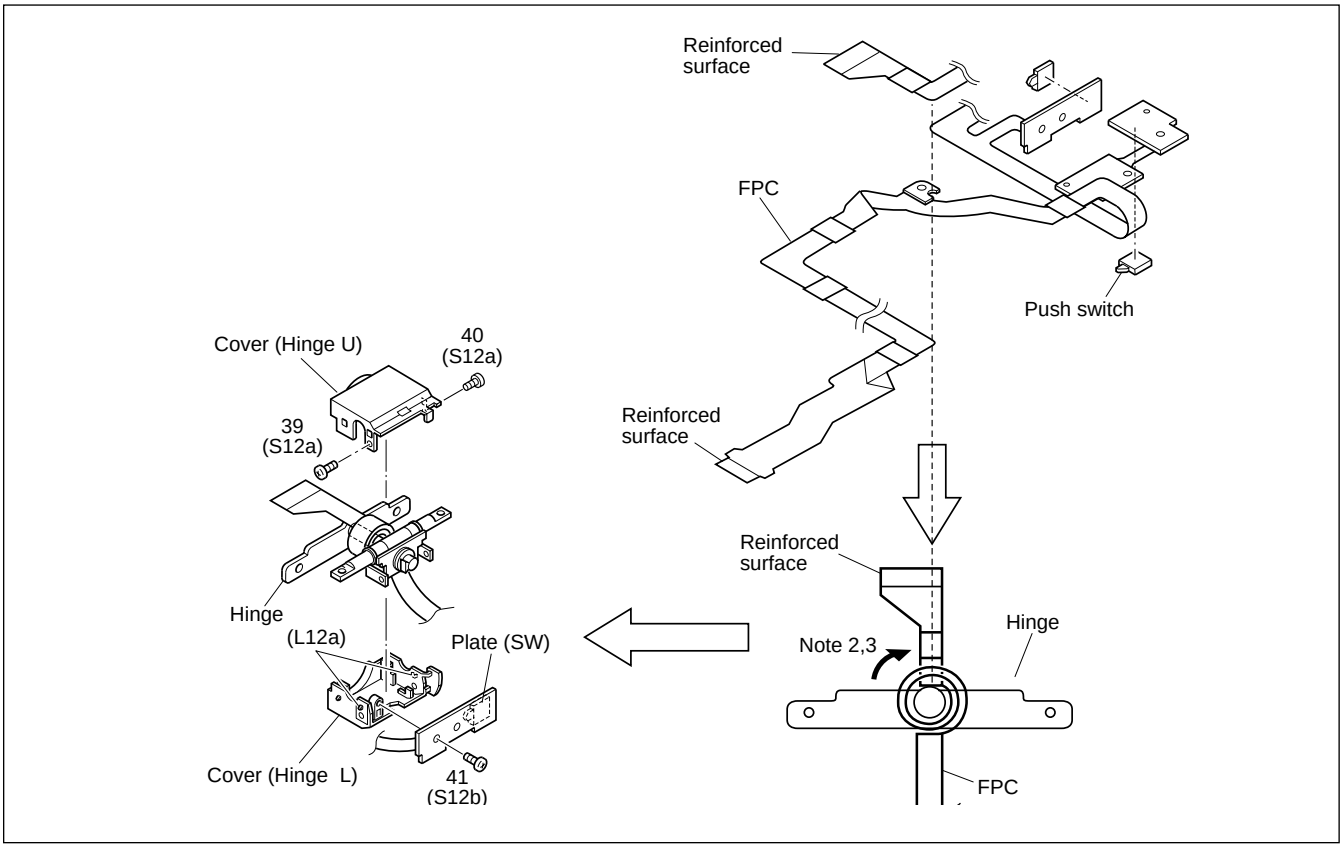

Fig. C12

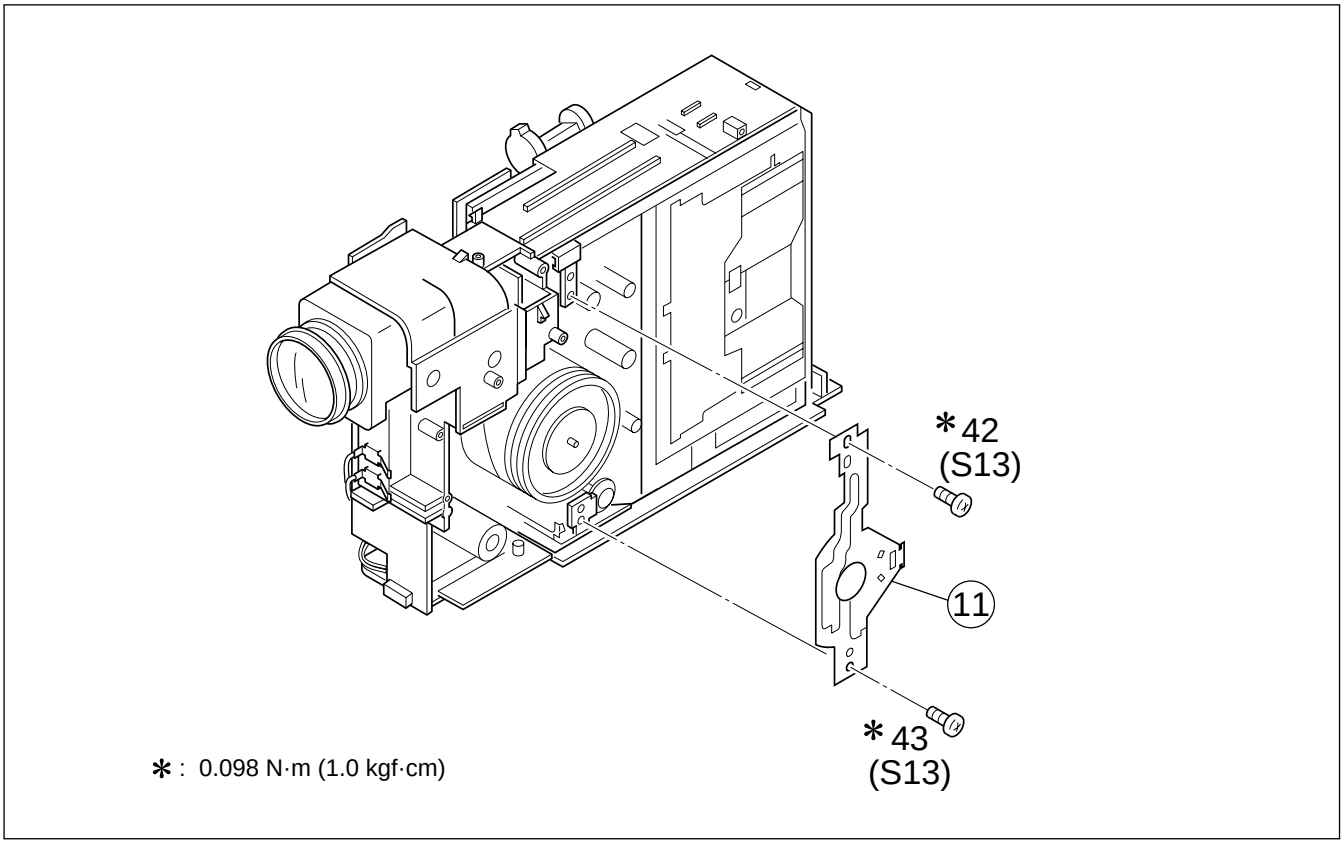

Fig. C13

1.4 DISASSEMBLY/ASSEMBLY OF CAMERA SECTION AND DECK SECTION

1.4.1 Flowchart of disassembly

The following flowchart shows the disassembly of the camera section and deck section. When assembly of the camera section and deck section, follow this flowchart in the reverse order.

<Camera section/Deck section>

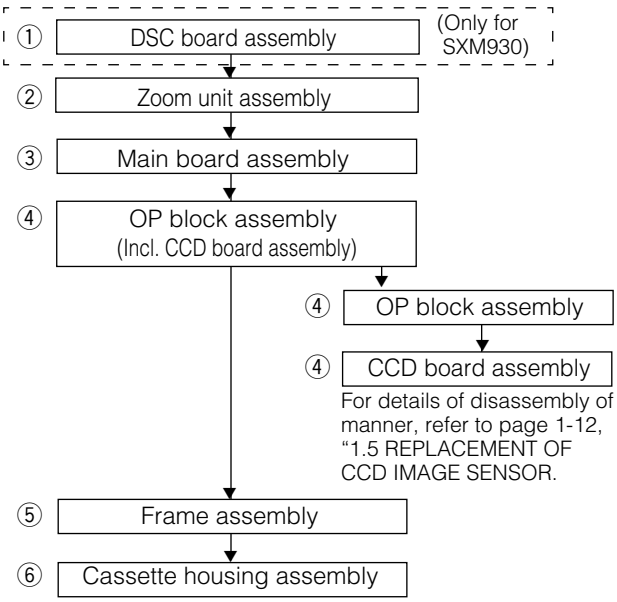

1.4.2 Disassembly method

STEP /LOC NO.	PART	Fig. No.	REMOVAL
			*UNLOCK/RELEASE/ UNPLUG/UNCLAMP/ UNSOLDER
①	DSC BOARD ASSEMBLY	D1	2(S1), (L1a), (L1b), (L1c) *CN (1a) , (1b) HOLDER (DSC)
②	ZOOM UNIT ASSEMBLY	D2	3(S2) *CN (2a) 4(S2) *CN (2a)
③	MAIN BOARD	D3	(S3), (L3a), (L3b) *CN (3a) ,(3b) ,(3c) , (3d) ,(3e) (3f) , (3g) ,(3h)
④	OP BLOCK ASSEMBLY	D4	2(S4) CUSHION (OP)
⑤	FRAME ASSEMBLY	D5	(S5a), 2(S5b), (S5c)
⑥	CASSETTE HOUSING ASSEMBLY	D6	4(S6)

List of Abbreviations:
2(S1) = 2 Screws (S1)
4(L1a)=4 Locking Tabs (L1a)
CN=Connector

Reference Notes:
<NOTE 1>
Destination of connectors

Note: *Two kinds of double-arrows in connection tables respectively show kinds of connector/wires.*

⟺ : Flat wire

↔ : Wire

Connector	No. of Pins	Connector		
⑴a	2	MAIN J4001/J4002	⟺	DSC JP8001/JP8002
⑴b	39	MAIN CN19	⟺	DSC CN8001
⑵a	14	MAIN CN13	⟺	ZOOM UNIT
⑶a	14	MAIN CN2	⟺	SENSOR
⑶b	11	MAIN CN5	⟺	VIDEO/FLY. E HEAD
⑶c	10	MAIN CN1	⟺	DRUM MOTOR
⑶d	6	MAIN CN4 (PIN 1,2) MAIN CN4 (PIN 5,6)	↔ ↔	LOADING MOTOR DC LIGHT (OPEN TWO PINS OF THE CENTER AND CONNECT)
⑶e	22	MAIN CN15	⟺	OP BLOCK
⑶f	18	MAIN CN3	⟺	CAPSTAN MOTOR
⑶g	11	MAIN CN7	⟺	A/C HEAD
⑶h	14	MAIN CN22	⟺	CCD

<NOTE 2>
Open two pins of the cennter and connect CN4 as shown in Fig.

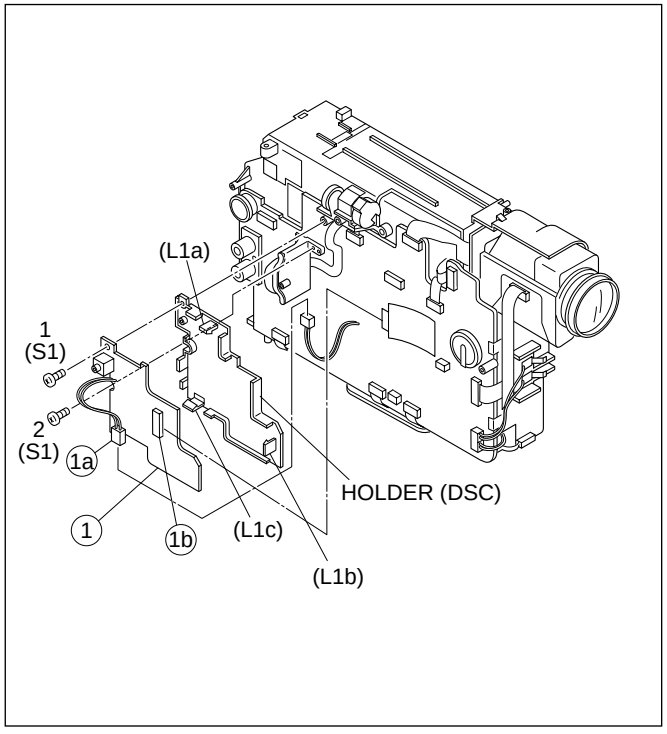

Fig. D1

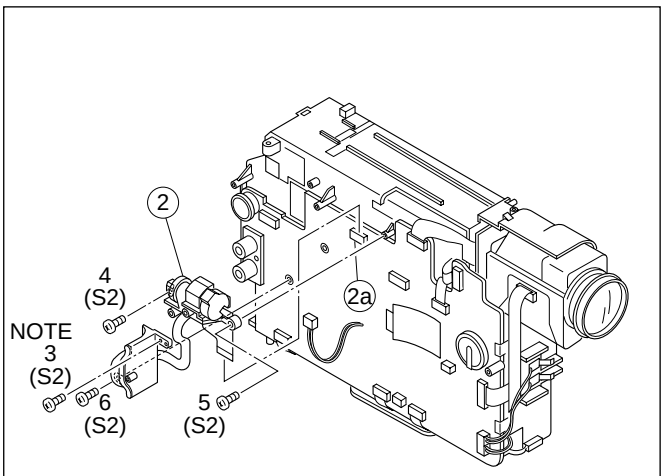

Note: *Regarding the DSC model, the screw "3" has been removed together with the DSC board.*

Fig. D2

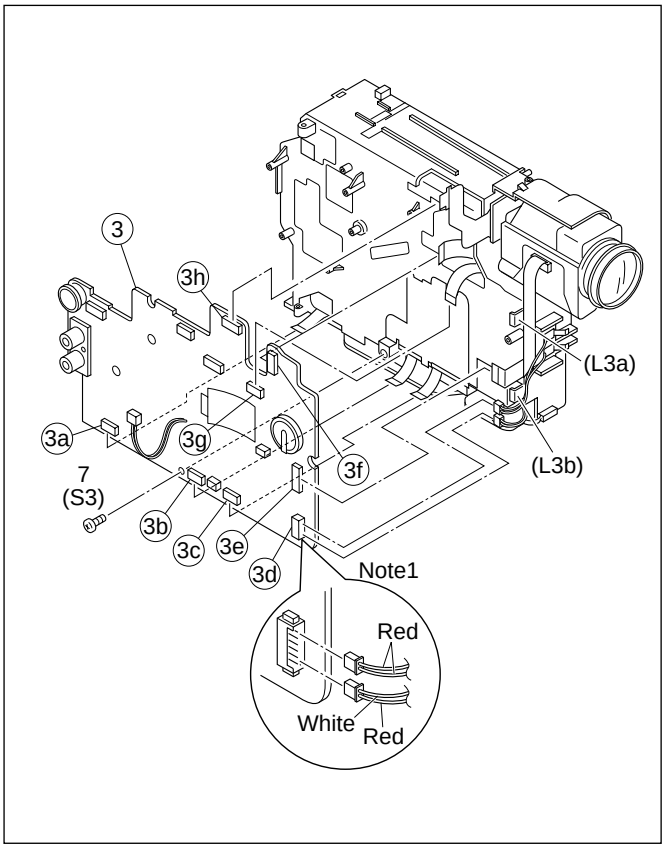

Fig. D3

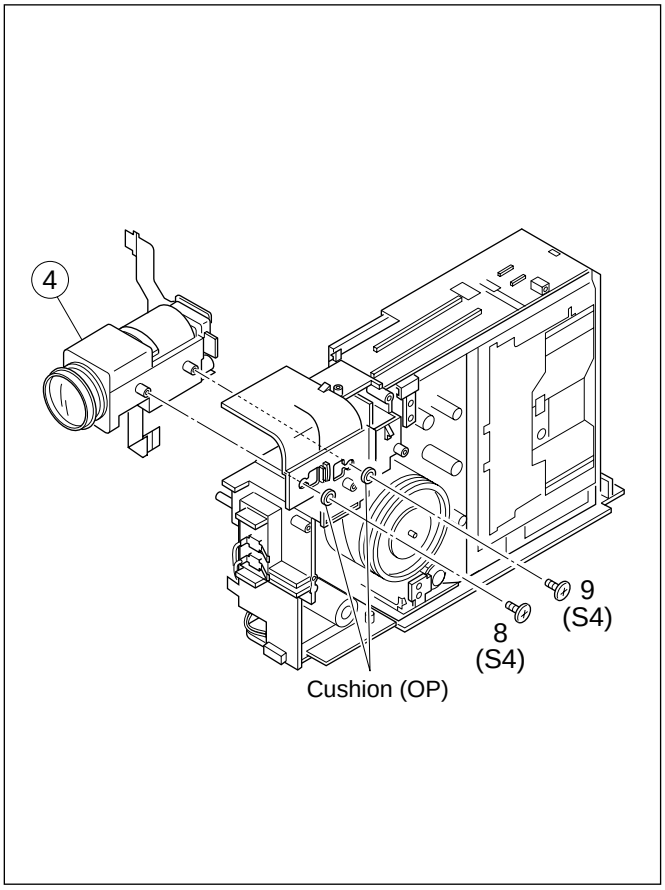

Fig. D4

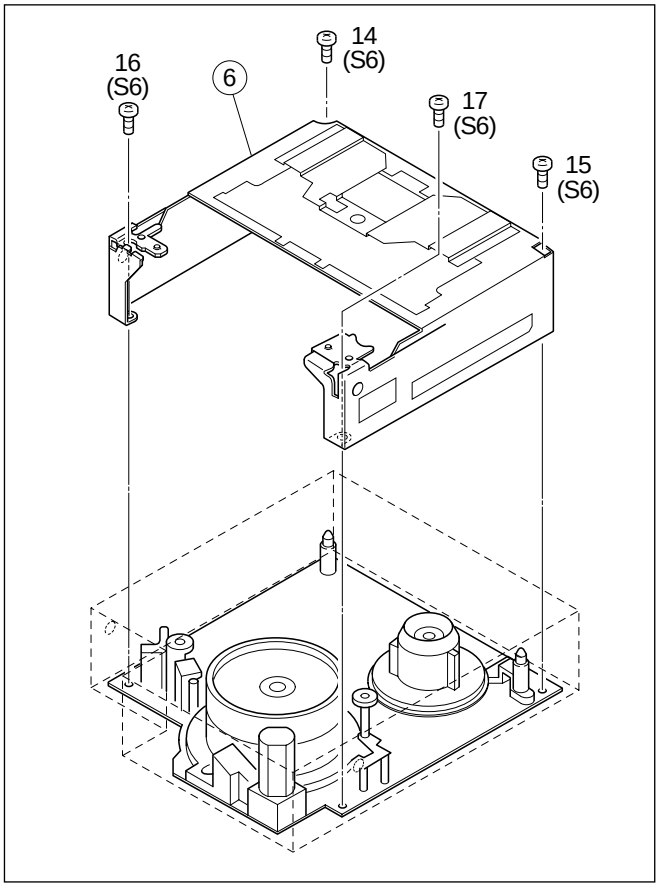

Fig. D6

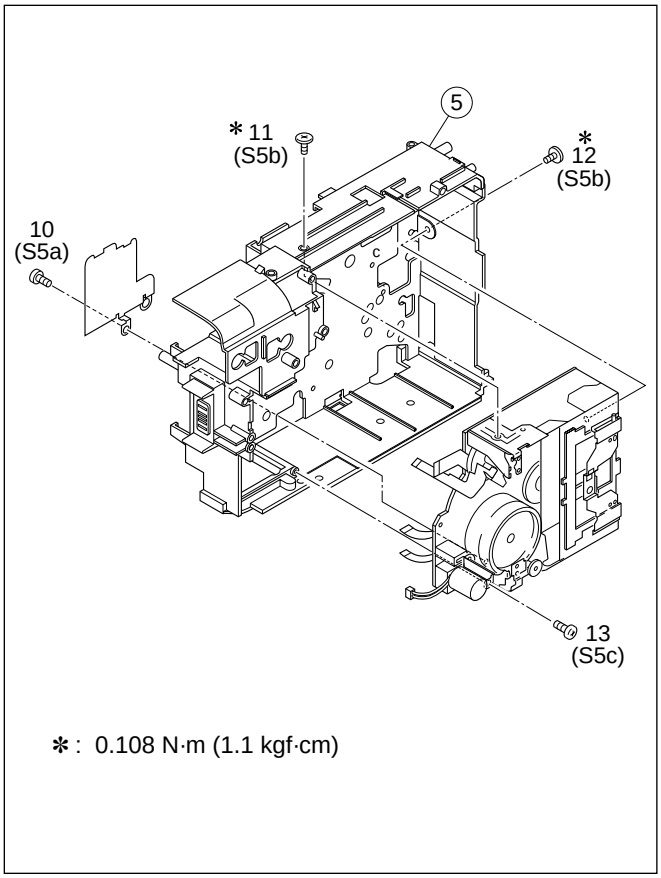

Fig. D5

1.5 REPLACEMENT OF CCD IMAGE SENSOR

Notes:

- *Pay the most careful attention to the transparent glass and optical LPF of the CCD image sensor so a not the soil and damage them. If something is soiled with finger-prints, etc., gently clean it with silicon-processed paper/cloth or chamois.*
- *When the CCD image sensor is shipped from the factory, there are protection seals applied onto the transparent glass. Leave the protector as it is, and take it off just before assembling the CCD image sensor to the OP block.*

1.5.1 Removal of CCD image sensor

1. Remove two screws (1, 2) securing the CCD base assy, and disassemble the CCD spacer, the optical LPF, spacer rubber.

1.5.2 Installation of new CCD image sensor

1. Remove the protection seal from a new CCD image sensor. Next, put the optical LPF, spacer rubber, CCD spacer on the CCD image sensor as they are piled up in this order. At that time, make sure of orientation of each item refering to the following table (see Fig. 1-5-1).

Part Name	Orientation
CCD image sensor	Mark is on the right viewed as indicated by the arrow ⓐ .
Spacer rubber	IC side is horizontal.
Optical LPF	Marks are on the left and bottom viewed as indicated by the arrow ⓐ .

2. Fix the CCD base assy to OP block with the two screws (1, 2) . At that time, be careful of the orientation.
3. After completion of all P.C. boards to the camera section, observe the monitor to confirm no vignetting caused by the bodytube, rings, lens hood, etc. If no vignetting is observed, it can be said that image's parallel, horizontality and centering are correct.

1.5.3 Replacement of CCD board assy

1. Remove one screw (3).
2. Unsolder at the fourteen points on the CCD board assy.

Note: *1. Remove the screw (3) only when the CCD board assy needs replacement.*
2. When installing a new CCD board assy, carry out the above-mentioned procedure in the reverse order.

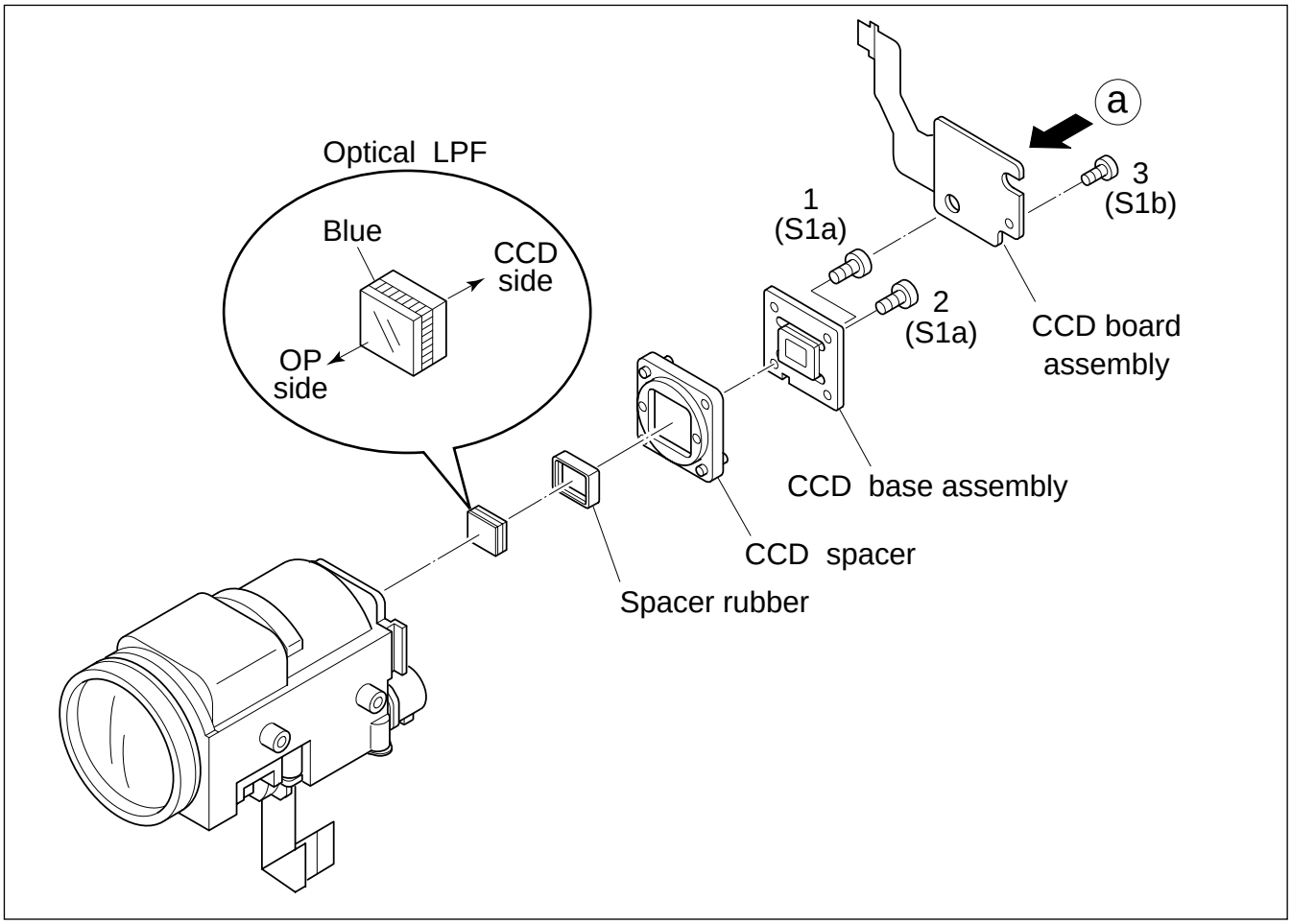

Fig. 1-5-1

1.6 TAKE OUT CASSETTE TAPE

In the event that the set enters the emergency mode as it is loaded with a cassette tape and the cassette tape cannot be ejected with the EJECT button, manually, take it out of the set according to the following procedure.

Note: *If the mechanism comes into the unloading mode as the cassette tape is not held by hand, it results in tape damage.*

1. Disconnect the set from the power source.
2. Remove the cassette cover assembly, Upper case, Lower case assembly, Top operation assembly, Monitor assembly (See Fig. C1, C2, C3, C5 and C8, Page 1-1 to 1-6).
3. Connect a jumper wire to each pole of the loading motor as shown by the magnified view ⓑ (Fig. 1-6-1)
4. While holding down the cassette housing by hand, connect the jumper wires to a battery to run the mechanism to the EJECT position four unloading. If this unloading operation is performed as the cassette housing is not held down by hand, the front lid of the cassette may damage the tape when it is ejected.
5. For taking in the slack of the tape, run the mechanism to the EJECT position as the front lid of the cassette is left open, and turn the take-up gear in the forward direction to wind up the tape. After confirming that the tape has completely been wound up and the supply reel is idling, take the cassette tape out of the cassette housing.

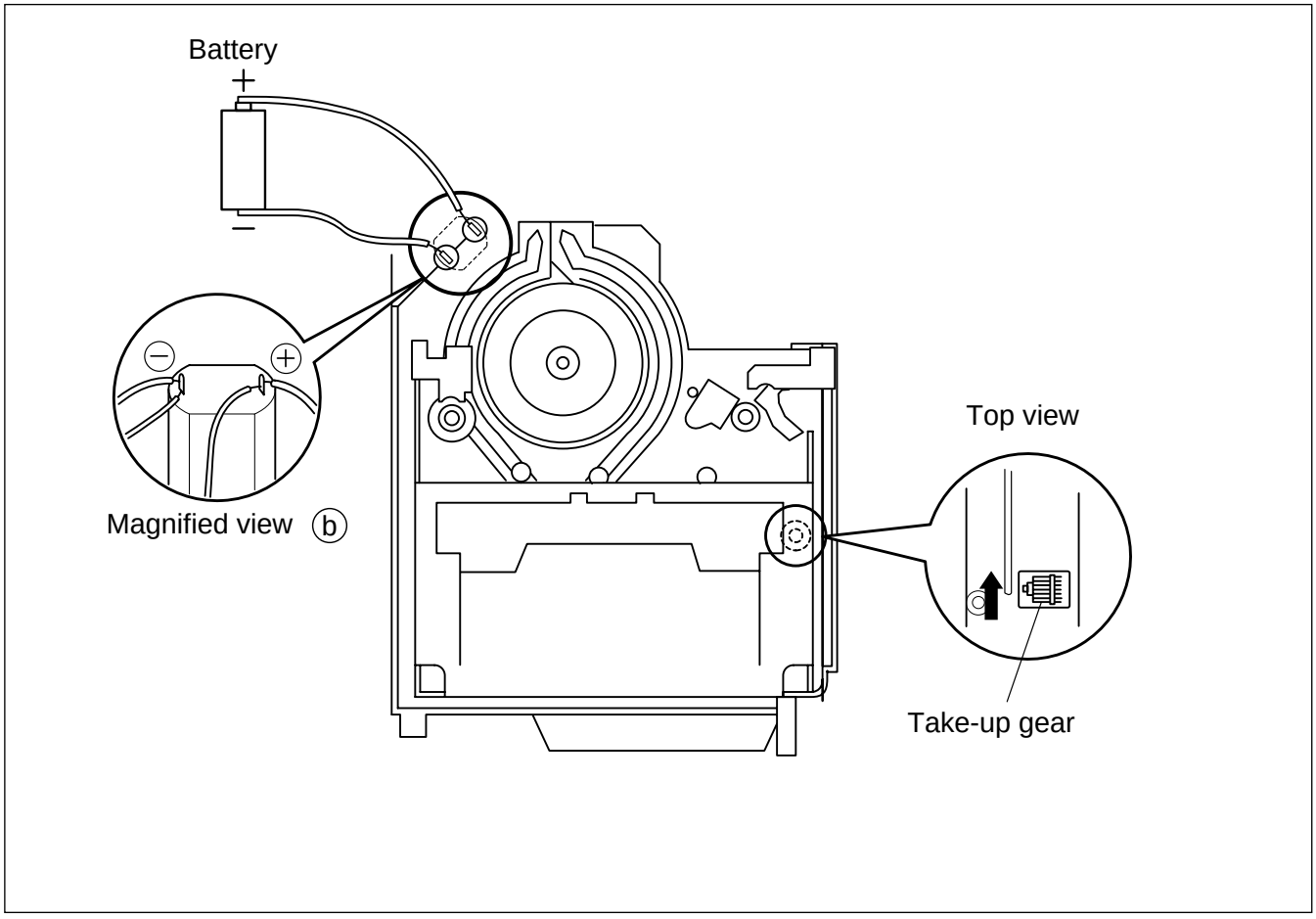

Fig. 1-6-1

1.7 EMERGENCY DISPLAY

Whenever some abnormal signal is input to the mechacon CPU, an error number (E01, as an example) is displayed in the electronic view finder.
In every error status, such the message as shown below alternately appear over and over.

- In an emergency mode, all operations except turning on/off the POWER switch are ineffectual.

Example (in case of the error number E01):

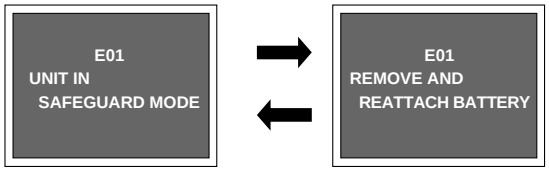

E. VF/LCD	Symptom	Mode when observed	Resulting mode
E07	Short circuit of capstan MDA	Power ON	Power OFF
E06	CAPSTAN FG input absent	EDIT	Power OFF
E04	DRUM FF input absent	DRUM rotation	Power OFF
E03	SUPPLY REEL FG input absent	REC, PLAY, SEARCH, FF	UNLOADING →Power OFF
E02	Mode control motor rotates for more than 10 sec without shift to next mode.	UNLOADING	Power OFF
E01	Mode control motor rotates for more than 10 sec without shift to next mode.	LOADING	Power OFF
E00	Overtime the programming transaction	REC, PLAY	Power OFF

1.8 DEMONSTRATION MODE

This model has the DEMONSTRATION mode.

1) How to set the DEMONSTRATION mode.
The camera can be entered into the DEMONSTRATION mode by setting on the DISPLAY screen appearing in the viewfinder.

When entering the camera into the DEMONSTRATION mode, pay heed to the following matters.

No cassette is set in the camcorder or a cassette is set in the camcorder but it is protected from recording.

Note 1) *The indications of the DISPLAY page very depending on the setting.*

2) How to cancel the DEMONSTRATION mode.
To cancel the DEMONSTRATION mode, turn the POWER switch off (“POWER OFF”).

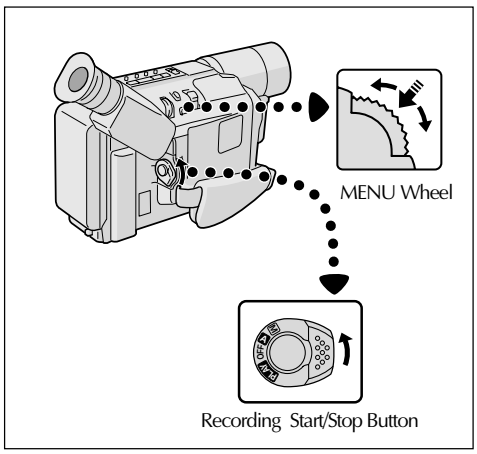

Fig. 1-8-1

1. Set the POWER switch to turn on the "M".
   Press the MENU WHEEL once. The first page of the DISPLAY appears on the LCD monitor (or in the viewfinder).

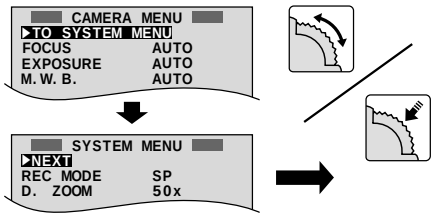

Display 1

2. Turn the MENU WHEEL in the direction of the arrow to set the cursor at “NEXT”.
   Press the MENU WHEEL once. The second page of the DISPLAY appears on the LCD monitor (or in the viewfinder).

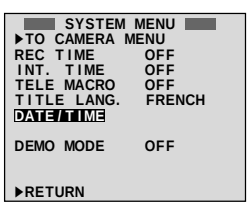

See to next page

Display 2

Note 2) *As the "DEMO MODE" is executed, the camcoder enters the DEMONSTRATION mode after the title screen of "TITLE CALL" and "FUTURE" appear in this order.*

<Flow chart>

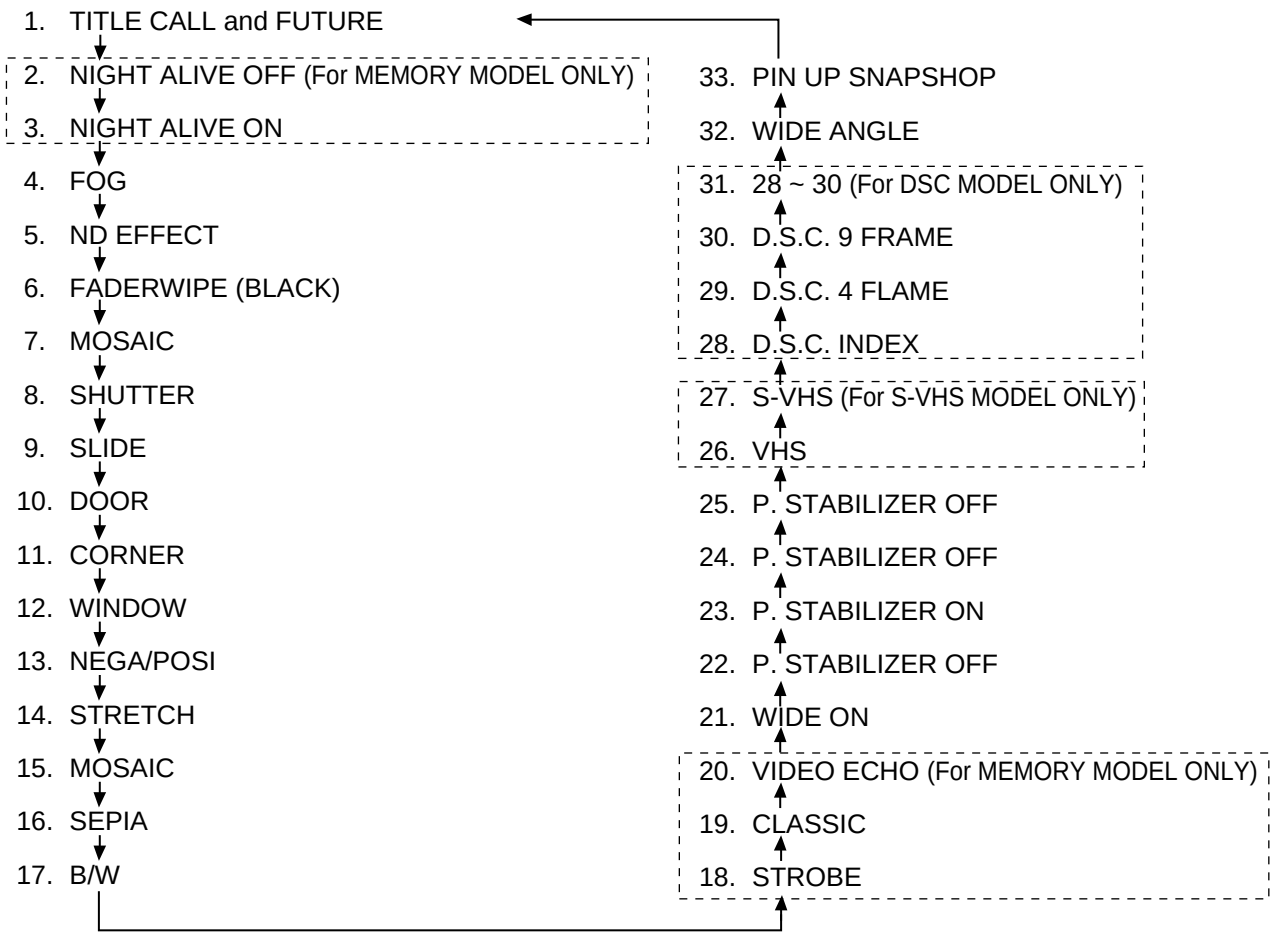

Fig. 1-8-2

3. Turn the MENU WHEEL in the direction of the arrow to set the cursor at "DEMO MODE". Then, press the MENU WHEEL once. The third page of the DEMO MODE appears on the LCD monitor (or in the viewfinder).

4. Turn the MENU WHEEL in the direction of the arrow to set the cursor at "ON". Then, press the MENU WHEEL once.
The fourth page of the DISPLAY appears on the LCD monitor (or in the viewfinder).
("DEMO MODE" is switched "ON" from "OFF" status.)

5. Press the MENU WHEEL once. The camcorder automatically enters the DEMONSTRATION mode and it repeats demonstration operation.
While the camcorder is performing demonstration, all operations except turning on/off the POWER switch are ineffectual.

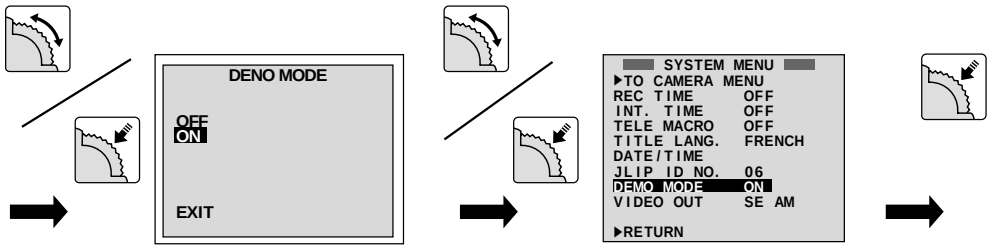

Display 3 Display 4

MAIN ASS'Y

Symbol No. →	①	②	③	④	⑤	⑥	⑦ (⑧ , ⑨)
Removing order of screw →	1 2	3 4	5 6 7 8 9 10 11 12 13	14 15 16	17 18	19 20 21	22 23 24 25
Place to stick screw →							
Reference drawing →	Fig. C1	Fig. C2	Fig. C3	Fig. C4	Fig. C5	Fig. C6	Fig. C7
Screw tightening torque →	I						

Symbol No. →	⑩				⑪
Removing order of screw →	26 27 28	29 30 31 32	33 34 35 36 37 38	39 40 41	42 43
Place to stick screw →					
Reference drawing →	Fig. C8	Fig. C9	Fig. C10	Fig. C12	Fig. C13
Screw tightening torque →	II			III	IV

DECK ASS'Y

Symbol No. →	①	②	③	④	⑤			⑥
Removing order of screw →	1 2	3 4 5 6	7	8 9	10 11 12 13			14 15 16 17
Place to stick screw →								
Reference drawing →	Fig. D1	Fig. D2	Fig. D3	Fig. D4	Fig. D5			Fig. D6
Screw tightening torque →	I				V	VI	I	VII

OP B LOCK ASS'Y

Symbol No. →	
Removing order of screw →	1 2 3
Place to stick screw →	
Reference drawing →	Fig. 1-5-1
Screw tightening torque →	IV

< NOTE >

- Pay careful attention to tightening torque for each screw.

I : 0.196 ± 0.019N·m II : 0.098 ± 0.009N·m III : 0.069 ± 0.009N·m
IV : 0.118 ± 0.019N·m V : 0.127 ± 0.012N·m VI : 0.069 ± 0.010N·m
VII : 0.186 ± 0.019N·m

Table 1-9-1

SECTION 2
MECHANISM ADJUSTMENT

2.1 SERVICE CAUTIONS

2.1.1 Precautions

1. Before disassembling/re-assembling the set as well as soldering parts, make sure to disconnect the power cable.
2. When disconnecting/connecting connectors, pay enough attention to wiring not to damage it.
3. When installing parts, be careful not to do with other parts as well as not to damage others. (Pay the most careful attention to the upper drum assy and tape transport mechanism.)

2.1.2 How to read the disassembly and assembly (For Mechanism Parts)

(1) Order of steps in Procedure
When reassembling, perform the step(s) in the reverse order. These numbers are also used as the identification (location) No. of parts Figures.

(2) Part to be removed or installed.

(3) Location of part.
T = Top
B = Bottom

(4) Fig. No. showing Procedure or Part Location.
M = Mechanism

(5) Identification of part to be removed, unhooked, unlocked, released, unplugged, unclamped or unsoldered.
P = Spring
W = Washer
S = Screw
* = Unhook, unlock, release, unplug or unsolder.

(6) Adjustment information for installation.
(+) = Refer to Exploded Views for Lubrication information.

2.1.3 Required adjustment tools

Alignment tape MHP-C	Alignment tape MHP-LC
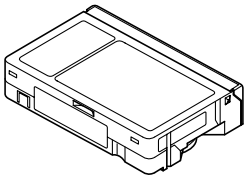	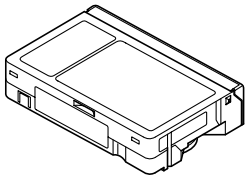
Jig connector cable YTU93106A	Extension connector YTU94145B-30
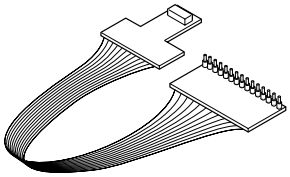	
Cassette torque meter PUJ50431-2	Roller Driver PTU94002-2
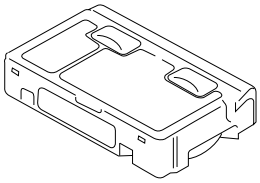	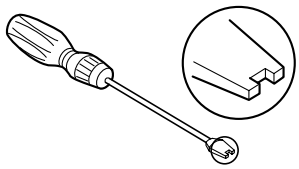

Table 2-1-1

(For Mechanism Parts)

STEP/LOC. No.	PART		Fig. No.	REMOVAL *UNHOOK/UNLOCK /RELEASE/UNPLUG /UNSOLDER	INSTALLATION ADJUSTMENT CONDITION NOTE
①	ROLLER BASE ASSEMBLY	T	M1	(S1)	–
②	TENSION ARM ASSEMBLY	T	M1	(P1), (W1a)	–
③	REEL DISC (SUP)	T	M1	(W1a), (W1b)	_
④	SLANT ARM ASSEMBLY	T	M1	(W1a)	–
⑤	CANCEL LEVER ASSEMBLY	T	M2	(W2)	_
⑥	EJECT LEVER ASSEMBLY	T	M2	(W2)	–
⑦	CASSETTE GUIDE (L) ASSEMBLY	T	M2	(S2)	–
(1)	(2)	(3)	(4)	(5)	(6)

2.2 DISASSEMBLY/ASSEMBLY OF MECHANISM PARTS

This procedure starts with the condition that the cabinet parts and deck parts. Also, all the following procedures for adjustment and parts replacement should be performed in STOP mode. When reassembling, perform the step(s) in the reverse order.

STEP/LOC. No.	PART		Fig. No.	REMOVAL *UNHOOK/UNLOCK /RELEASE/UNPLUG /UNSOLDER	INSTALLATION ADJUSTMENT CONDITION NOTE
①	ROLLER BASE ASSEMBLY	T	M1	(S1)	–
②	TENSION ARM ASSEMBLY	T	M1	(P1), (W1a)	–
③	REEL DISC (SUP)	T	M1	(W1a), (W1b)	–
④	SLANT ARM ASSEMBLY	T	M1	(W1a)	–
⑤	CANCEL LEVER ASSEMBLY	T	M2	(W2)	–
⑥	EJECT LEVER ASSEMBLY	T	M2	(W2)	–
⑦	CASSETTE GUIDE (L) ASSEMBLY	T	M2	(S2)	–
⑧	SUPPLY CLUTCH ASSEMBLY	T	M2	(W2)	–
⑨	WHEEL GEAR	T	M2	(W2)	See, Adjustment procedure for Section 1.3
⑩	ROTARY ENCODER	B	M3	4(S3a)	The function of this part varies according to the assembly (YMA0030A-E/ YMA0031A-E) which this part is incorporated in.
⑪	TIMING BELT	B	M3	–	–
⑫	CENTER PULLEY UNIT	T/B	M3	2(S3a)	–
⑬	CASSETTE GUIDE (R) ASSEMBLY	T	M3	(S3b), (P3)	(Only use YMA0031A-E)
⑭	TU GEAR	T	M3	(W3a)	–
⑮	BRAKE SUB GEAR	T	M3	(W3a)	–
⑯	P.R ARM ASSEMBLY	T	M3	(W3b)	–
⑰	TU GUIDE ARM ASSEMBLY	T	M3	(W3b)	–
⑱	LINK ARM ASSEMBLY	T	M4	(W4)	–
⑲	LED GUIDE	T	M4	(S4a)	–
⑳	A/C HEAD UNIT	T	M4	2(S4b)	–
㉑	SLANT POLE BASE ASSEMBLY	T	M5	(S5a)	–
㉒	CAP MOTOR ASSEMBLY	T	M5	3(S5a)	–
㉓	MOTOR BASE	T	M5	2(S5b), (S5c)	–
㉔	BRUSH	B	M6	(S6a)	–
㉕	DRUM FINAL	T/B	M6	2(S6b), 2(S6c) *CATCHER	–
㉖	GUIDE RAIL	T	M6	8(S6d)	–
㉗	POLE BASE (SUP)	T	M6	–	–
㉘	POLE BASE (TU)	T	M6	–	–
㉙	COVER PLATE	T	M7	–	–
㉚	DRIVE LEVER ASSEMBLY	T	M7	–	–
㉛	MOTOR BRACKET ASSEMBLY	T	M7	3(S7)	–
㉜	CONTROL CAM	T	M8	(W8a)	See, Adjustment procedure for Section 1.3
㉝	LINK LEVER	T	M8	–	–
㉞	MIDDLE GEAR	T	M8	–	–
㉟	LOADING GEAR(T) ASSEMBLY	T	M8	(W8b)	See, Adjustment procedure for Section 1.3
㊱	LOADING GEAR(S) ASSEMBLY	T	M8	(W8b)	–
㊲	LOADING RING ASSEMBLY	T	M8	4(S8)	See, Adjustment procedure for Section 1.3

Table 2-2-1

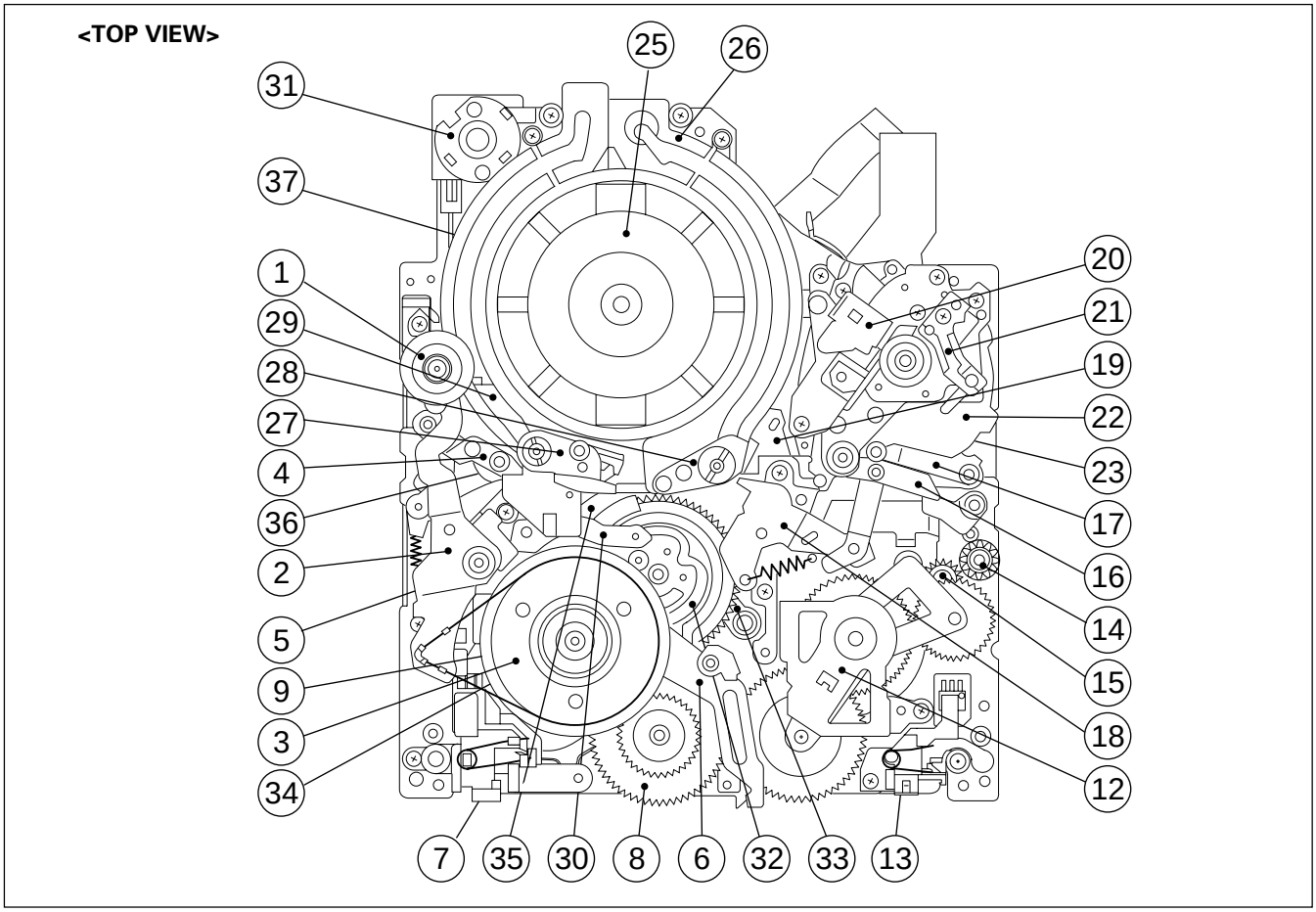

Fig. 2-2-1 TOP VIEW

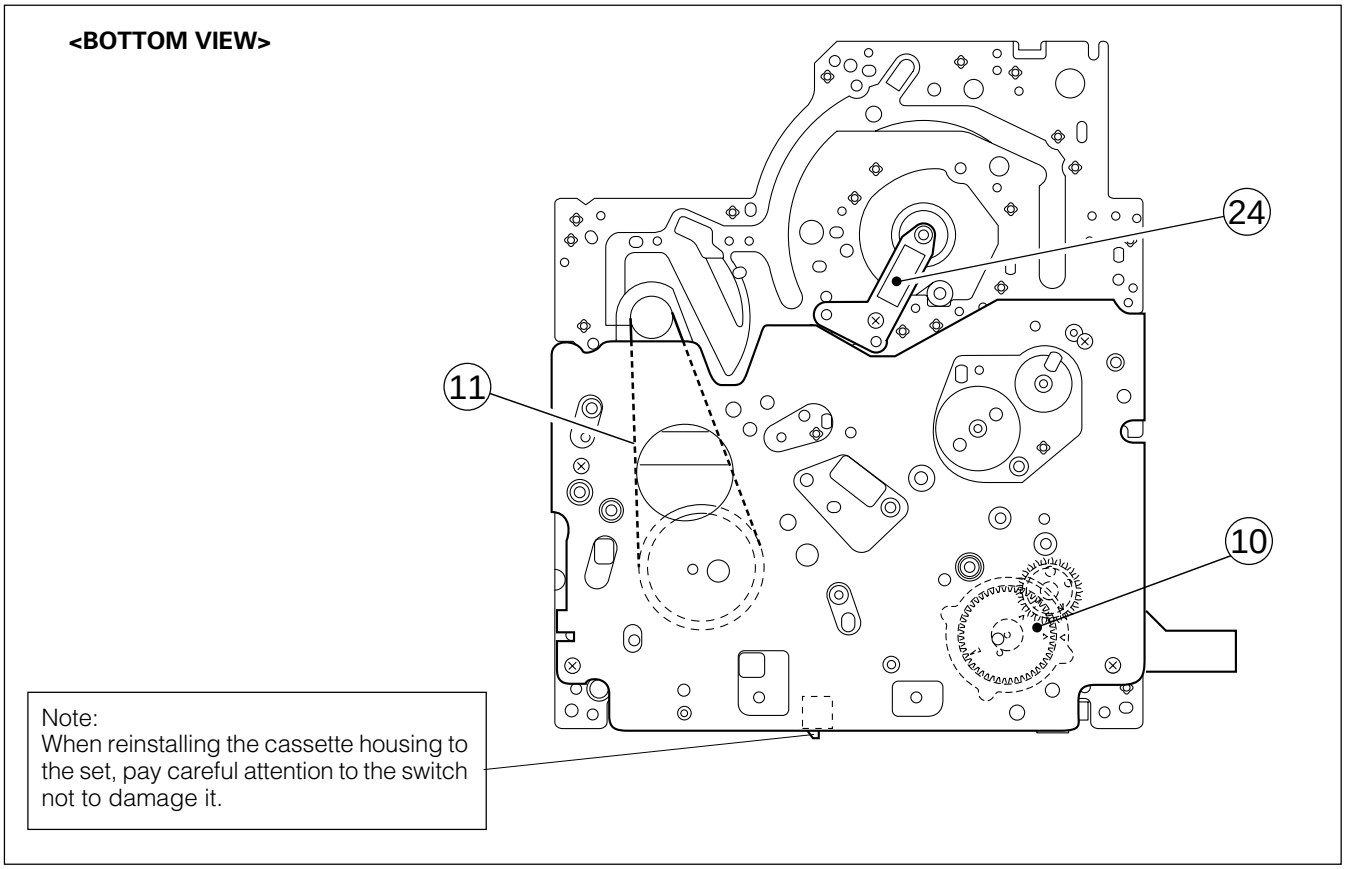

Fig. 2-2-2 BOTTOM VIEW

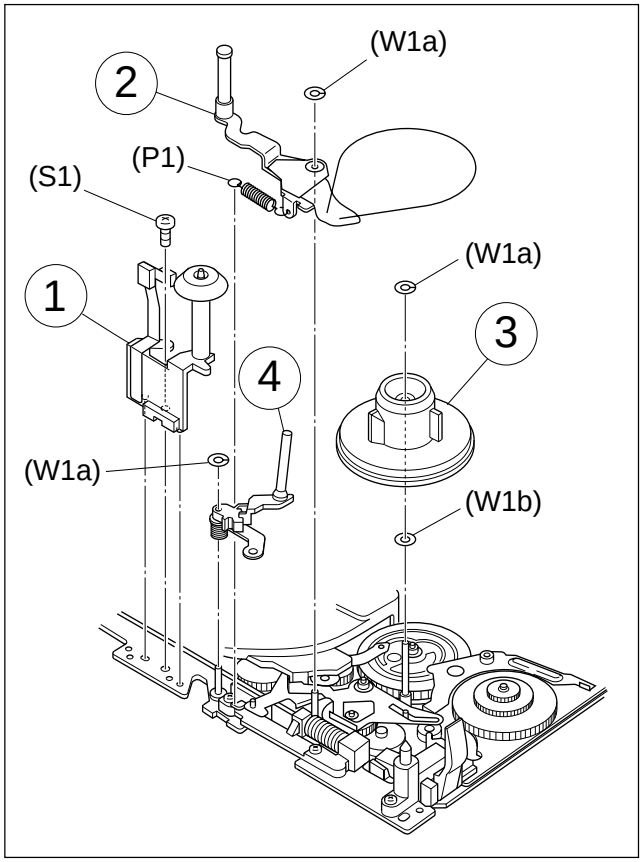

Fig. M1

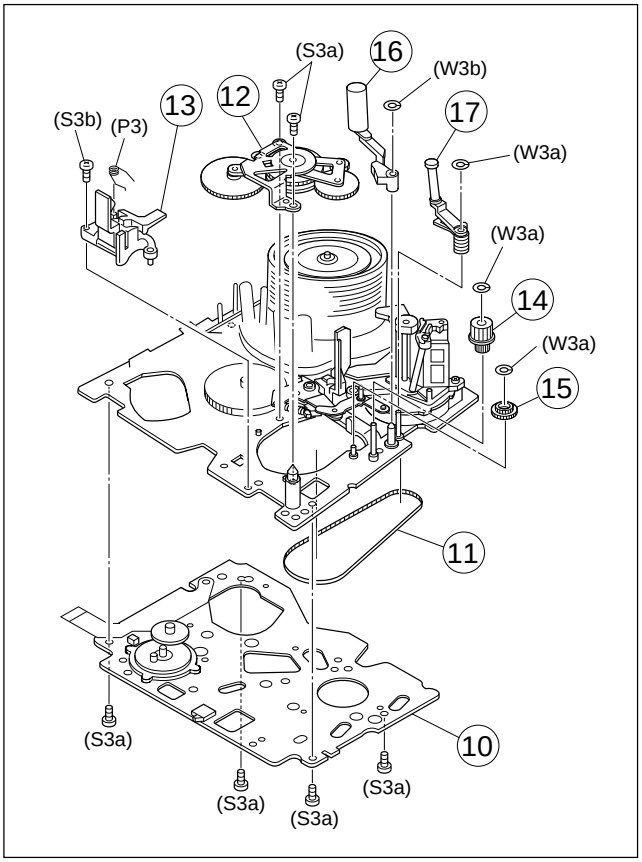

Fig. M3

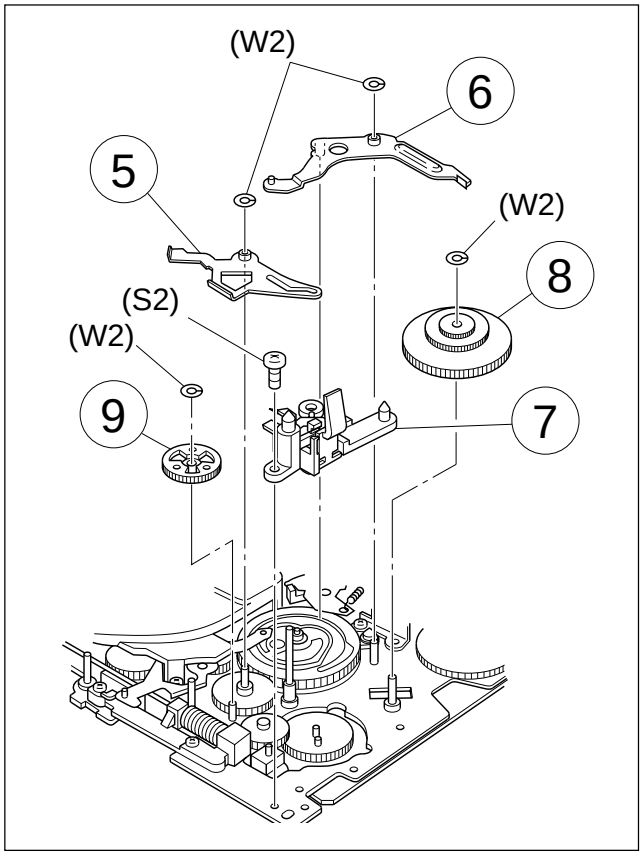

Fig. M2

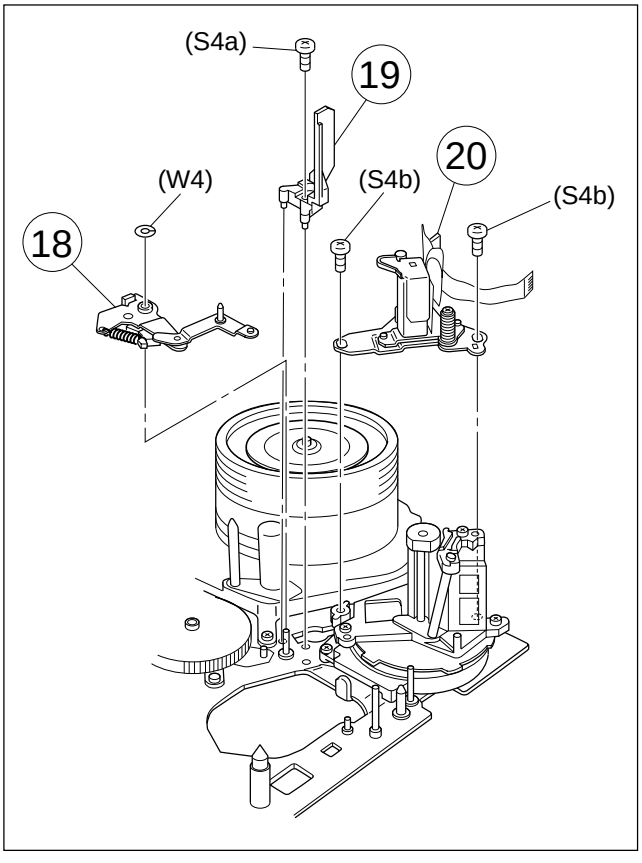

Fig. M4

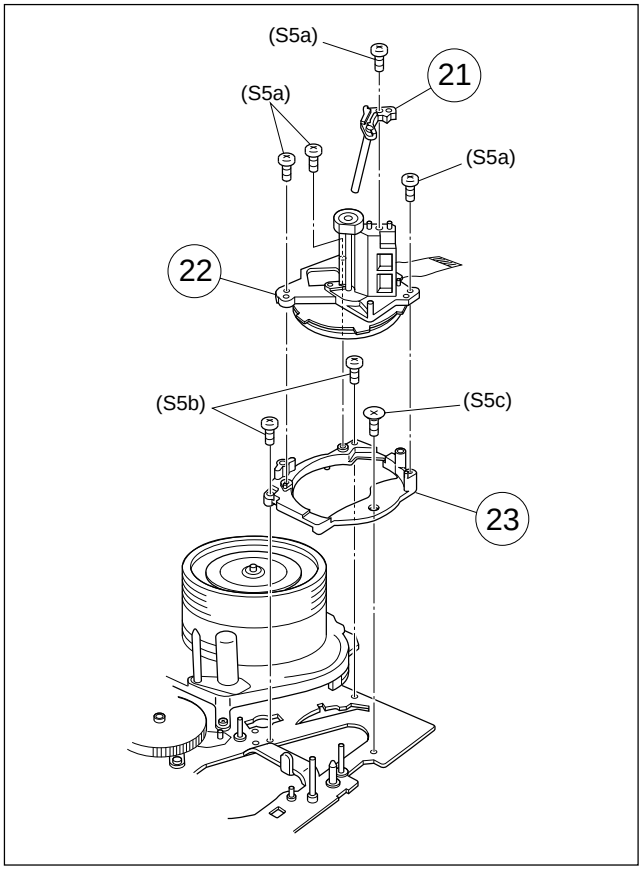

Fig. M5

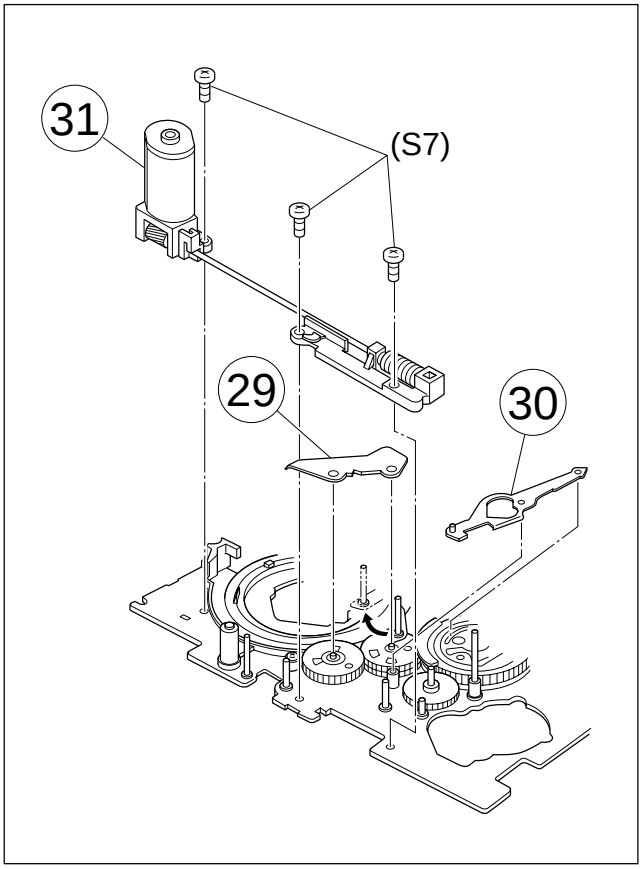

Fig. M7

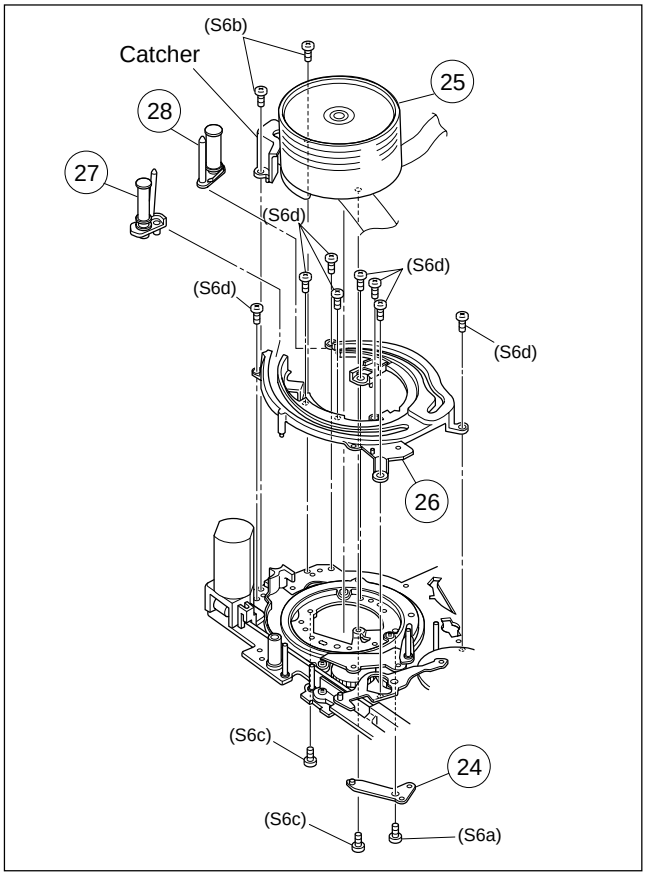

Fig. M6

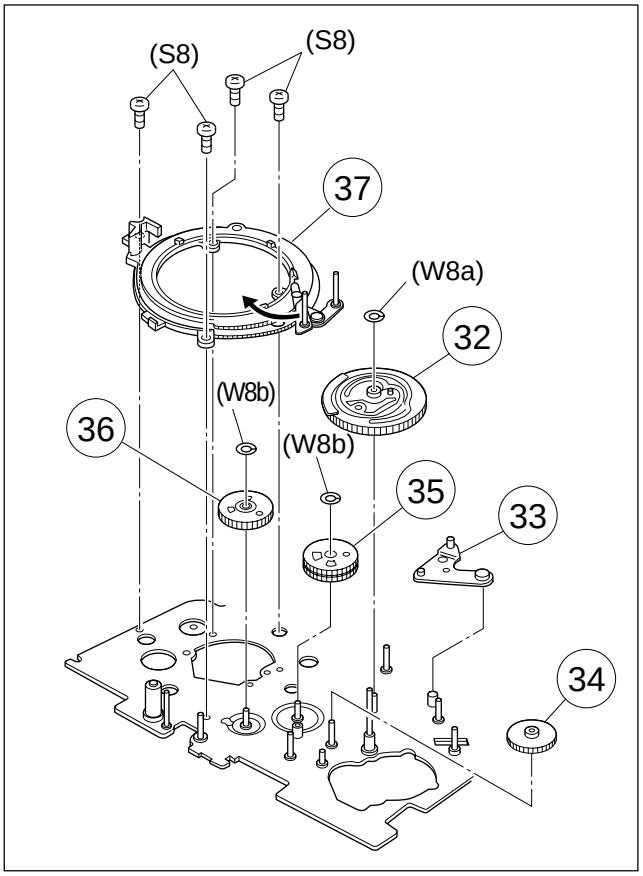

Fig. M8

2.3 CHECKUP AND ADJUSTMENT OF MECHANISM PHASE

Note: *Pay careful attention to the installing order and phase of mechanism parts of the loading system.*

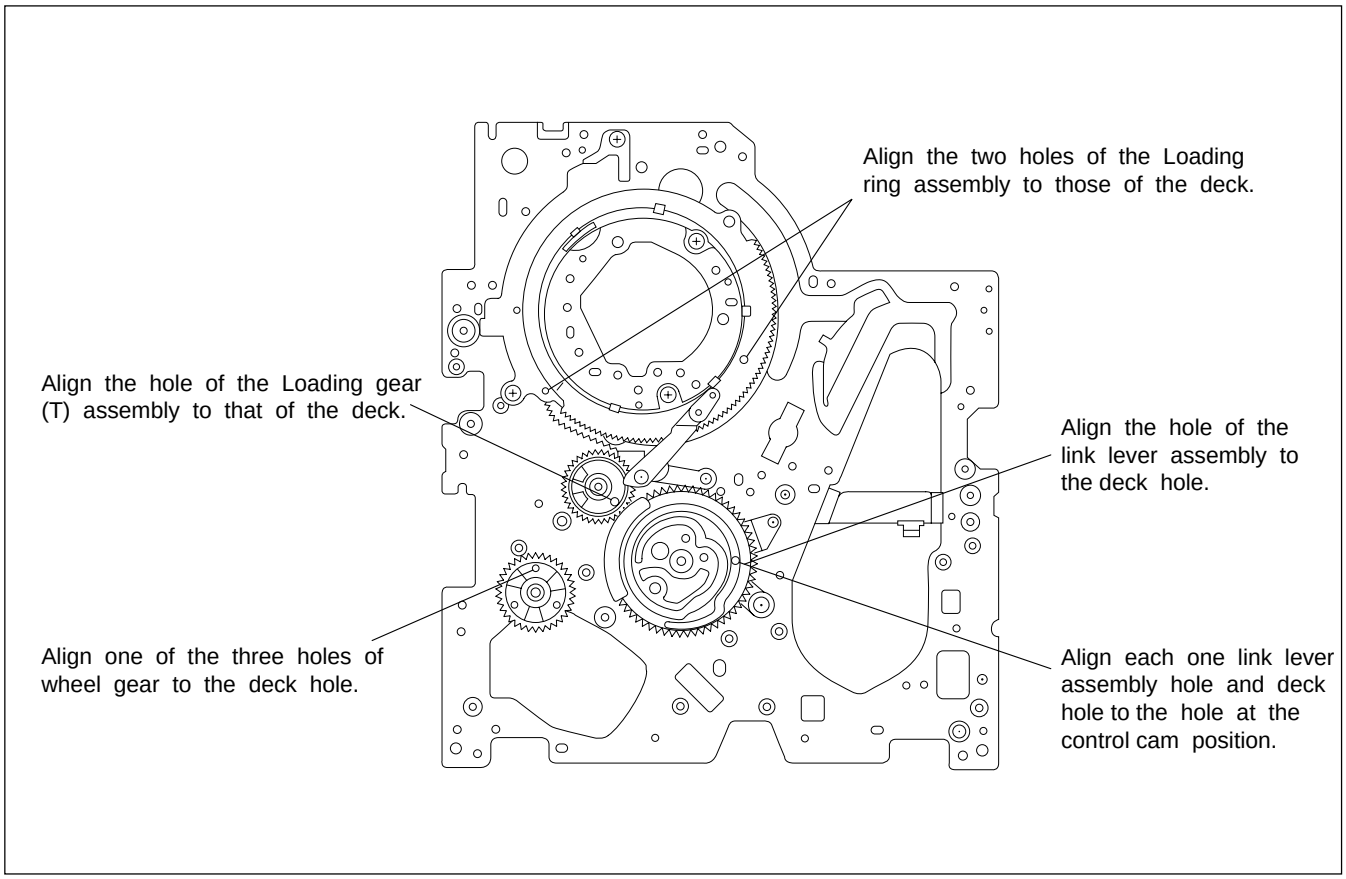

Fig. 2-3-1 Top of main deck

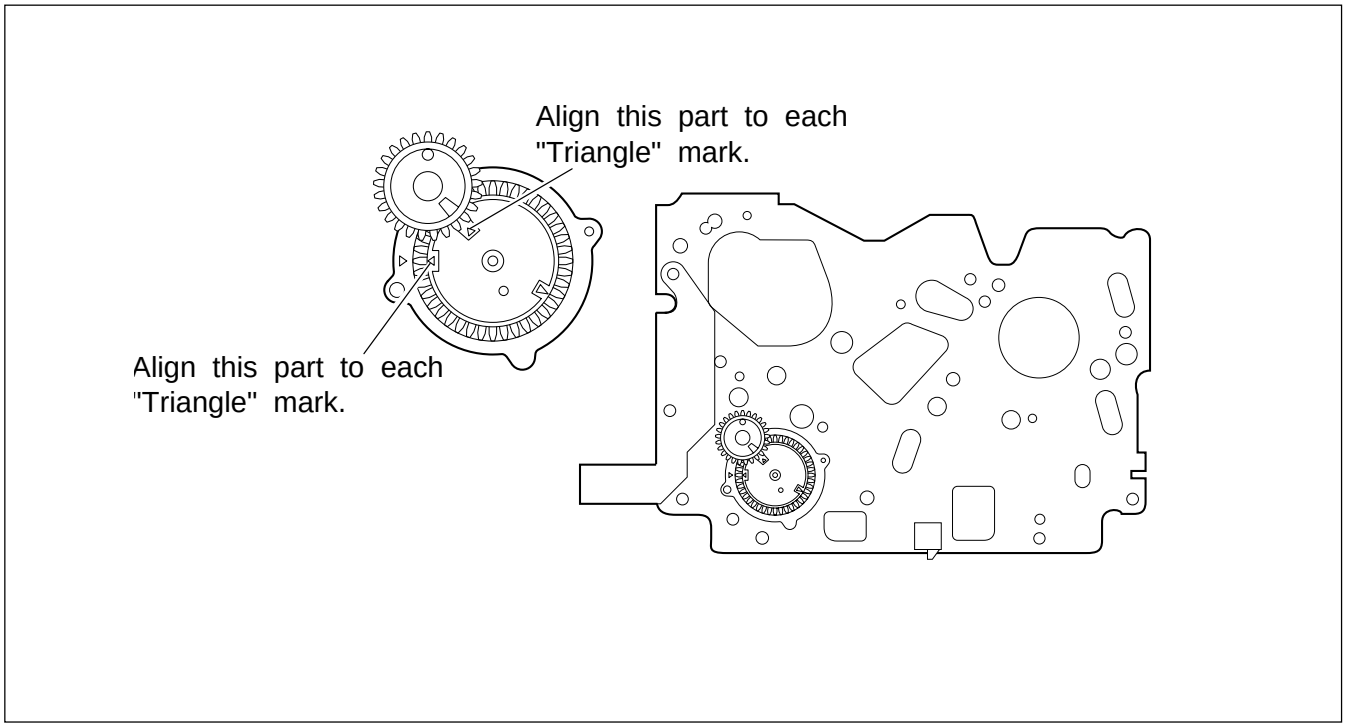

Fig. 2-3-2 Rotary encoder

2.4 TAPE TRANSPORT ADJUSTMENT

In most cases the deck section is in need electrical adjustment, it results from replacement of worm mechanical parts or video heads. In the event of malfunction with electrical circuits, troubleshouting with the aid of proper test instruments most be done first, and then commence necessary repair, replacement and adjustment, etc.

2.4.1 Back tension

1. Set a cassette torque meter onto the deck and measure the back tension in standard REC mode to confirm that the back tension is $0.7x10^{-3}$–$1.37x10^{-3}$N·m.
2. If not, replace the tension band.
   When the value widely fluctuates in the measurement, replace the supply reel disk.
3. With the cassette torque meter, confirm that the play torque is $1.47x10^{-3}$–$2.45x10^{-3}$N·m.
   If necessary, replace the center pully unit.

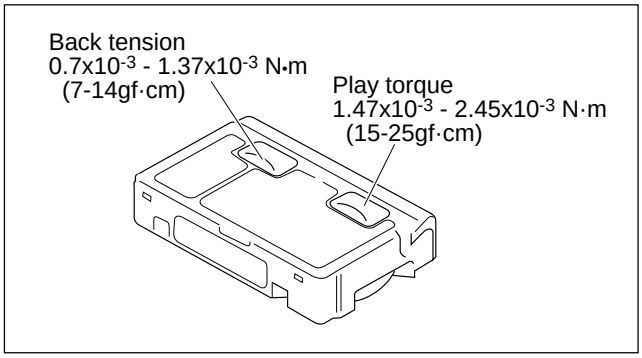

Fig. 2-4-1 Cassette torque meter

2.4.2 Tape pattern

1. Remove the Cover (JIG) shwon on Fig. 2-6-1 (Page 2-10).
2. Connect the jig connector cable to CN25 on the MAIN board as shwon on Fig. 2-6-1 (Page 2-10).
3. Observe signal at V. TP FM with external trigger from V. FF on the jig connector cable.
4. Playback the SP stairstep signal of the alignment tape and maximize the FM waveform by the tracking button.
5. Set the tracking control to the center position by simultaneously pressing the tracking (-) and (+) buttons and maximize the FM waveform by the tracking button.
6. If the observed FM waveform is not flat, adjust the height of the supply of take-up guide roller with the roller driver.

   Note: *To prevent the tape from damage, turn the guide rollers slowly.*

7. By operating the tracking button (both in + and – directions) in the manual tracking mode, vary the output level of the FM waveform from maximum to minimum and vice versa to confirm that the waveform varies nearly in a flat shape.
8. When the FM waveform breaks in the level varying process, subtly adjust the height of guide rollers at every breaking point so that the waveform varies as flat as possible.
   Repeat the above steps 6. and 7. several times to confirm that the waveform is flat as a whole.
9. Playback the SP stairstep signal of alighment tape and adjust the tracking control to maximize the FM waveform, confirm that FM waveform variation is always flat.
10. Record the signal and play it back in both of the SP and EP modes, and confirm that the FM waveform is flat in both modes.

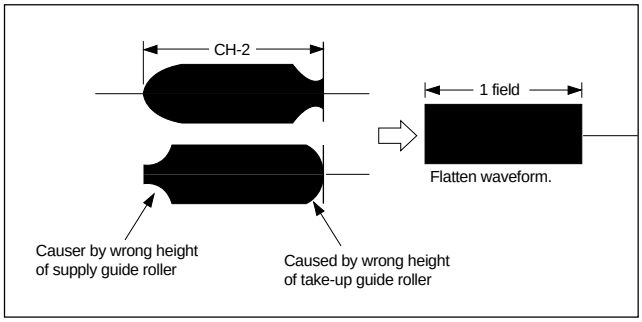

Fig. 2-4-2 FM waveform-1

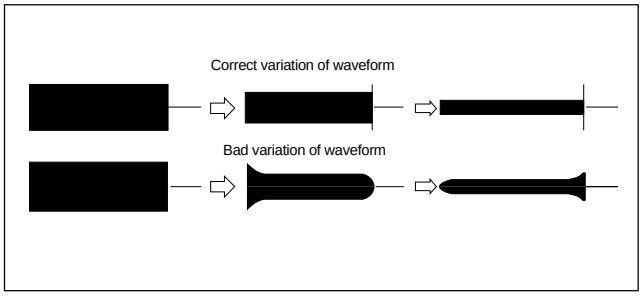

Fig. 2-4-3 FM waveform-2

11. Through the above steps, confirm that there occur no wrinkling and damage in the tape around the pinch roller and TU guide pole whenever the deck is in operation of Loading/Unloading, Search Rewind and at mode change from Search Rewind to play mode. If wrinkling or damage in the tape occurs around the TU guide pole, adjust the angle (slant) of the A/C head to the tape. So that the tape normally runs along the lower flange of the guide pole.

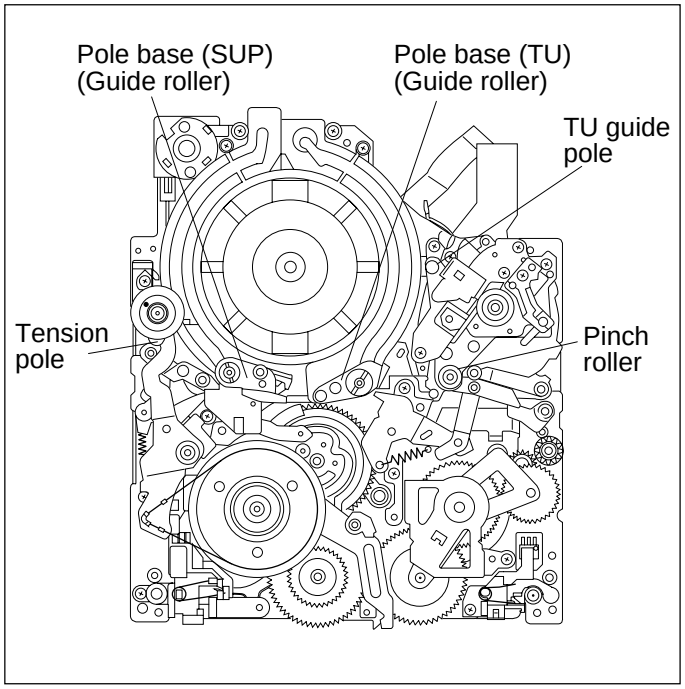

Fig. 2-4-4 Tape transport system

2.4.3 A/CTL head height & azimuth

1. Connect the jig connector cable to CN25 on the MAIN board.
2. Connect the channel-1 scope probe to the audio output and connect the channel-2 scope probe to PB CTL.
3. Playback the alignment tape.
4. Set the tracking to its center range by pressing the (+) and (–) tracking controls simultaneously.
5. Adjust screws Ⓐ , Ⓑ and Ⓒ approximately 45 degrees in the same direction to obtain maximum audio output and CTL signal levels.
6. As a final fine adjustment, adjust screw Ⓑ for minimum signal level fluctuation and screw Ⓒ for maximum output signal level.

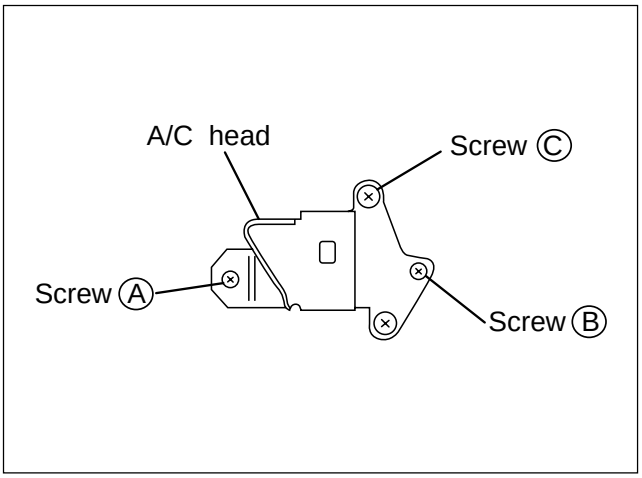

Fig. 2-4-5 A/C head

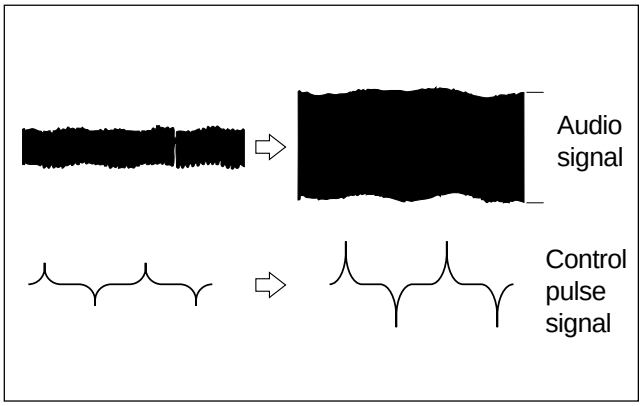

Fig. 2-4-6 Audio and CTL signal

2.4.4 Phase of control head (X value)

1. Connect the jig connector cable to CN25 on the MAIN board.
2. Playback the SP stairstep signal of the alignment tape and observe signal at V.TP FM with external trigger from V.FF on the jig connector cable.
3. Operate the tracking button in the center and manual tracking mode by pressing the tracking (+) and (–) buttons and confirm that the FM output level is maximum at the center position as shown in Fig. 2-4-8.
4. If necessary, slightly loosen the setscrews Ⓓ and Ⓔ and insert the Tweezers into the notch and guide hole to move the A/C head fully in the direction of the capstan to the extent.
5. Gradually move the A/C head toward the drum to find the position where the FM output level maximum for the first time (a' – b' in Fig. 2-4-8).
6. Fine adjust the phase of the A/C head and tighten the screws Ⓓ and Ⓔ at the point a.

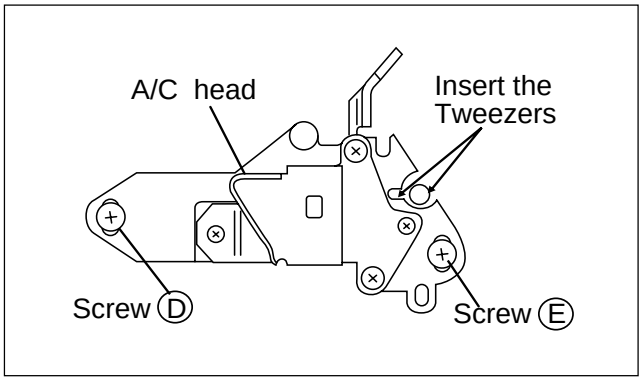

Fig. 2-4-7 Phase of control head

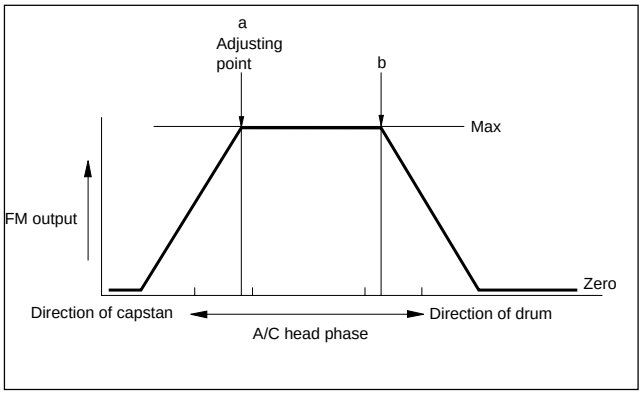

Fig. 2-4-8 Phase adjustment point of control head

2.5 REMARKS

2.5.1 Cleaning

1. For cleaning of the upper drum (particularly video heads), use fine-woven cotton cloth or Kimwipe with alcohol soaks through. Do not move the cloth but turn the upper drum counterclockwise.

   Note: *Make sure not to move the cloth in the vertical direction to the video head, since it may cause damage of the video heads.*

2. For cleaning of parts of the tape transport system except the upper drum, use fine-woven cotton cloth or cotton swab soaked alcohol.
3. After cleaning, confirm that the cleaned parts are completely dry before loading the deck with cassette tape.

2.5.2 Applying oil and grease

1. Periodical oiling and greasing are not required but should be done to new parts when replacing. If oil and grease on the other parts of the other party are old and dirty, wipe them clean and apply new oil or grease.
2. For parts and points to apply oil and grease, refer to the exploded view of the mechanism assembly (M3). Table 2-5-1pecifies oil and grease to be used.
3. When oiling, clean the objective parts with alcohol first and apply one or two drop(s) of oil. Too much oiling causes rotary parts to slip because of oil leakage.

Classification	Name	Symbol in drawing
Grease	KYODO-SH-P	AA
Oil	YTU94027	BB

Table 2-5-1 Specific oil and grease to be used

2.5.3 Checkup

After replacement of the supply reel disk and tension band, make sure to inspect back tension according to the adjustment procedure of MECHANISM ADJUSTMENT section.

2.6 JIG CONNECTOR CABLE CONNECTION

Remove the cover (JIG).

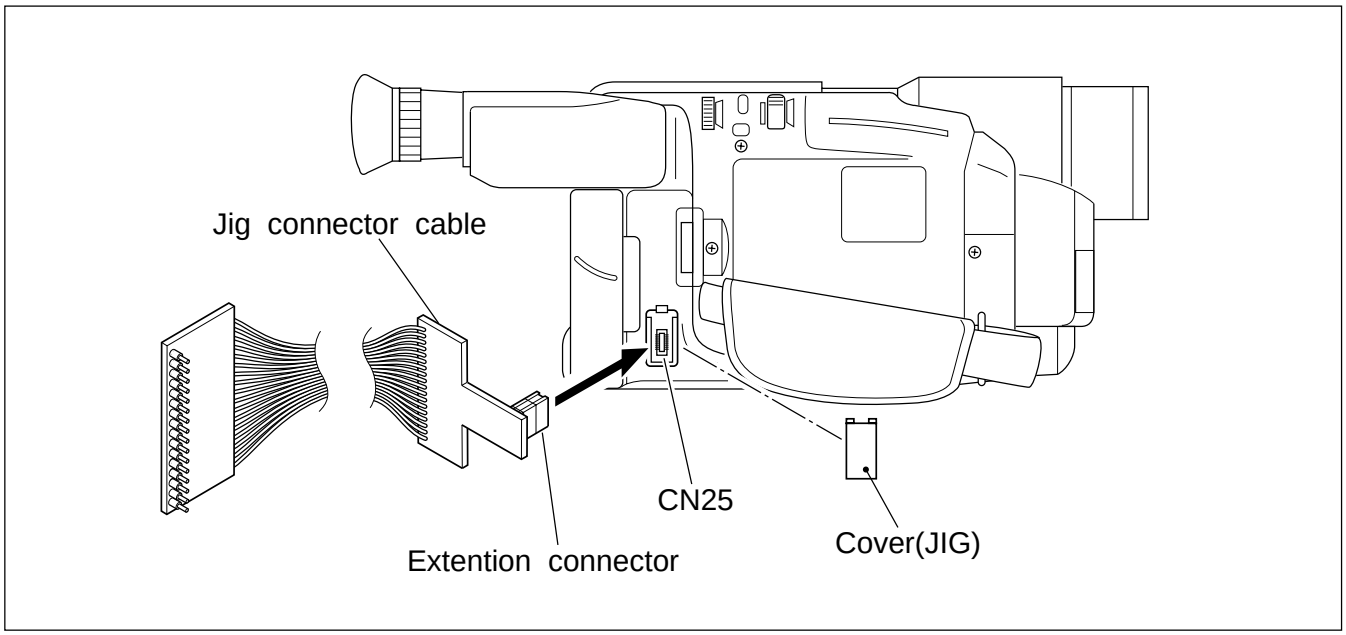

Fig. 2-6-1 Jig connector cable connection

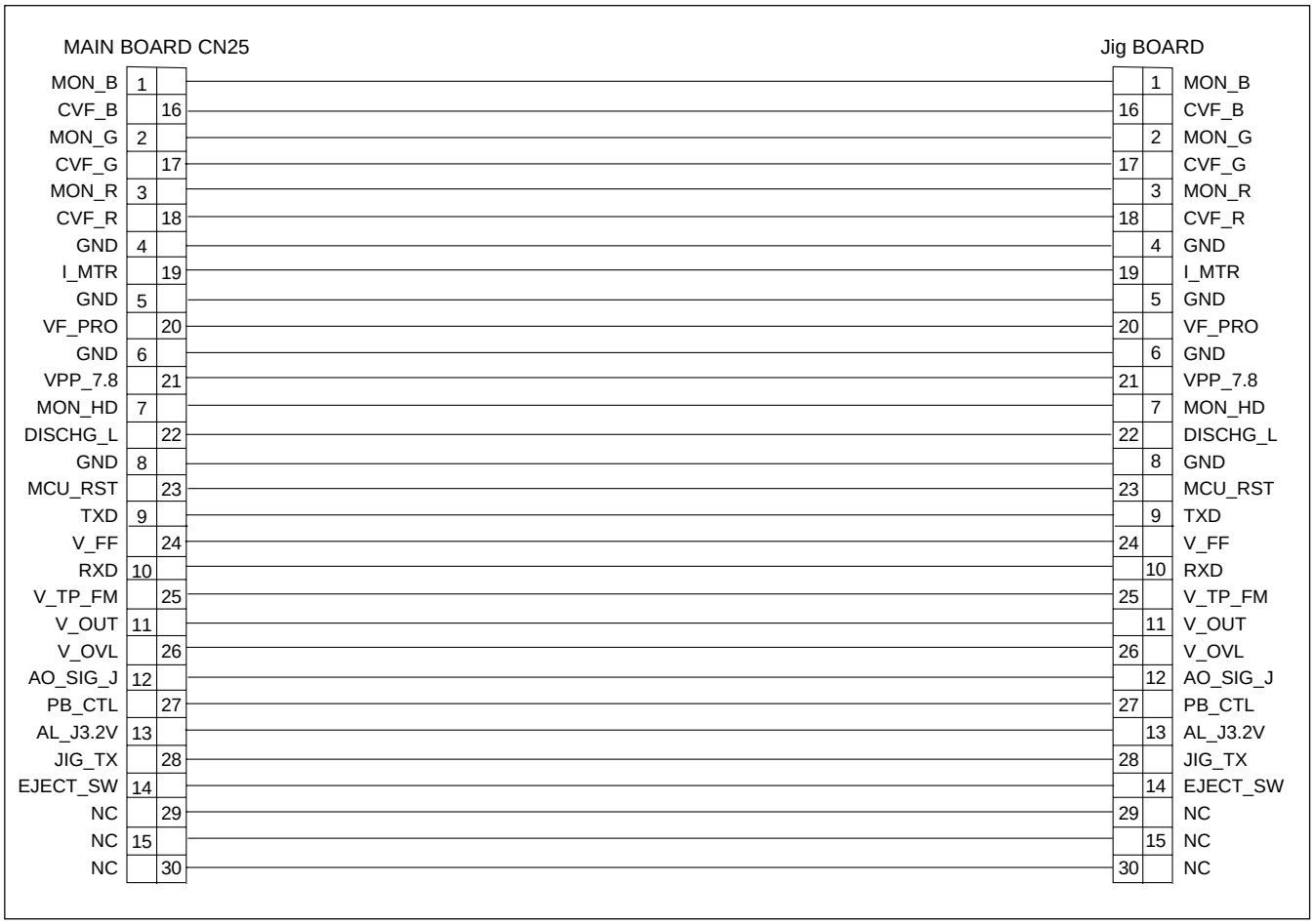

Fig. 2-6-2 Jig connector cable schematic diagram

SECTION 3
ELECTRICAL ADJUSTMENT

3.1 ELECTRICAL ADJUSTMENT

3.1.1 PREPARATION

1. Precaution

This model does not contain adjustment controls (VR). General deck system, camera system and monitor system adjustment are not required. However, if MAIN board and MONITOR board need replacement, please use original E^2PROM on to new board. Then adjustment are not required. And if parts such as the following need replacement, special computerized adjustment are required (Refer to sec. 3.1.1-4). Please contact to JVC Service for detaile information.

- OP block
- EEP ROM (IC104 of MAIN board)
- MONITOR

In the event of malfunction with electrical circuits, trouble-shooting with the aid of proper test instruments most be done first, and then commence necessary repair, replacement and adjustment, etc.

1. In case of wiring to chip test points for measurement, use IC clips, etc. to avoid any stress.
2. Since connectors are fragile, carefully handle them in disconnecting and connecting.
3. Shortcircuit between operation un it and DECK chassis.

2. Required test equipment

1. Color TV monitor.
2. AC power adapter
3. Oscilloscope (dual-trace type, observable 100 MHz or higher frequency)
   * It is recommended to use one observable 300 MHz or higher frequency.
4. Digital voltmeter
5. Frequency counter (with threshold level adjuster)
6. Personal computer

3. Required adjustment tools

For detsails of special jigs necessary for adjustment, refer to page 1-2 and 1-3 of the Section 1.

4. Setup for E. VF section adjustment

1. B/W VF (For AXM230/SXM330)

Referring to “SEC. 1 DISASSEMBLY” and connect the E. VF WIRE to CN12 of the MAIN board.

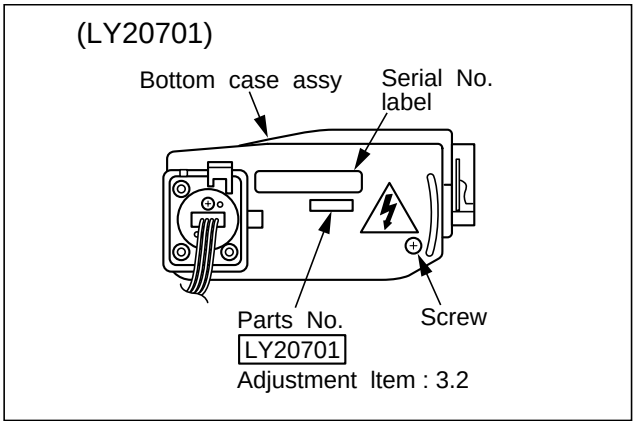

2. COLOR VF (For SXM930)

Referring to "SEC. 1 DISASSEMBLY" and connect the E. VF FPC to CN11 of the MAIN board.

Note:

- *This adjustmentalls into a special adjustment that requires a personal computer.*
  For details, refer to “3.1.1 Preparation”.

5. Connection for Service support system

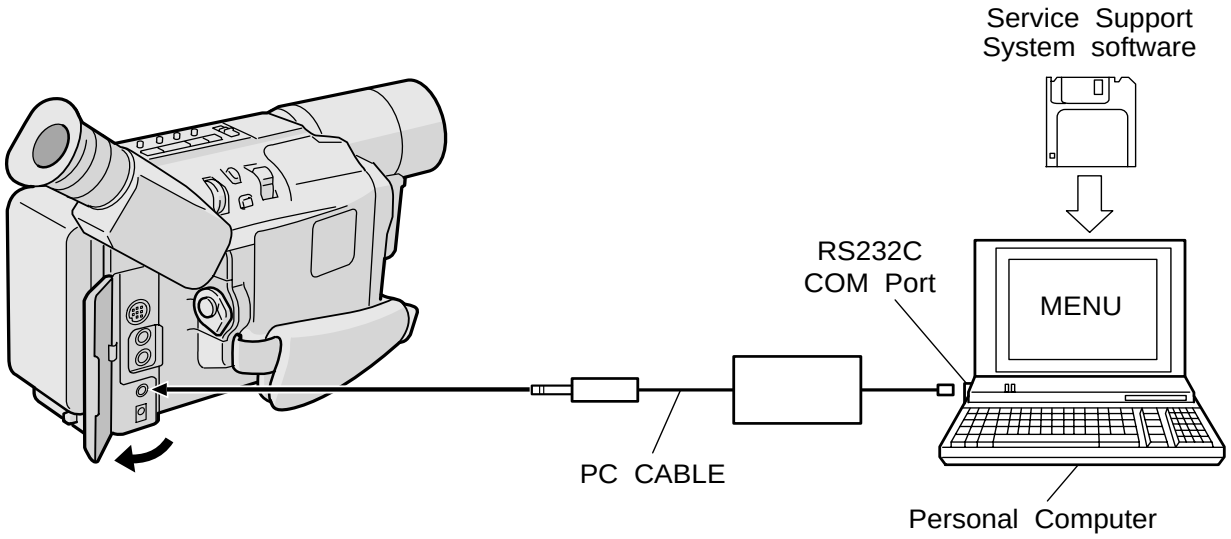

Fig. 3-1-1 Connection for Service support system

■ FUSE LOCATION FOR MAIN BOARD ASSEMBLY

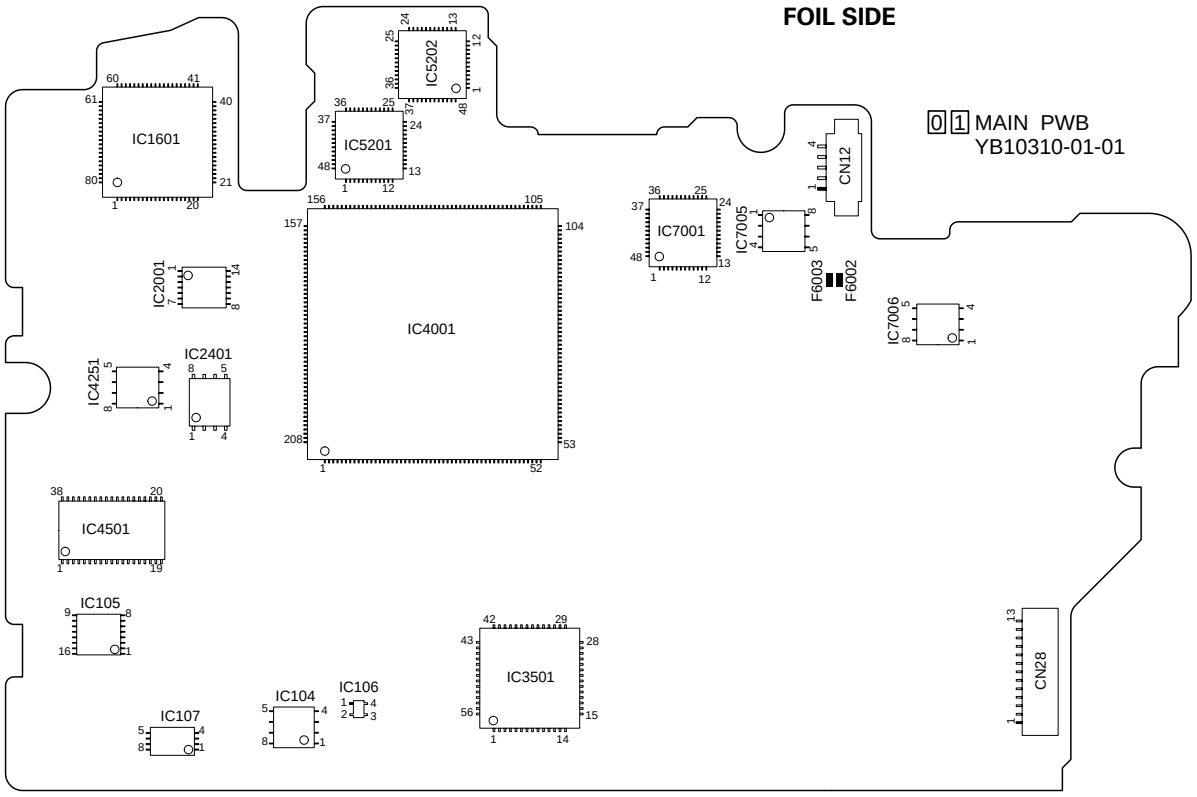

Fig. 3-1-2 FUSE location for MAIN board assembly (FOIL SIDE)

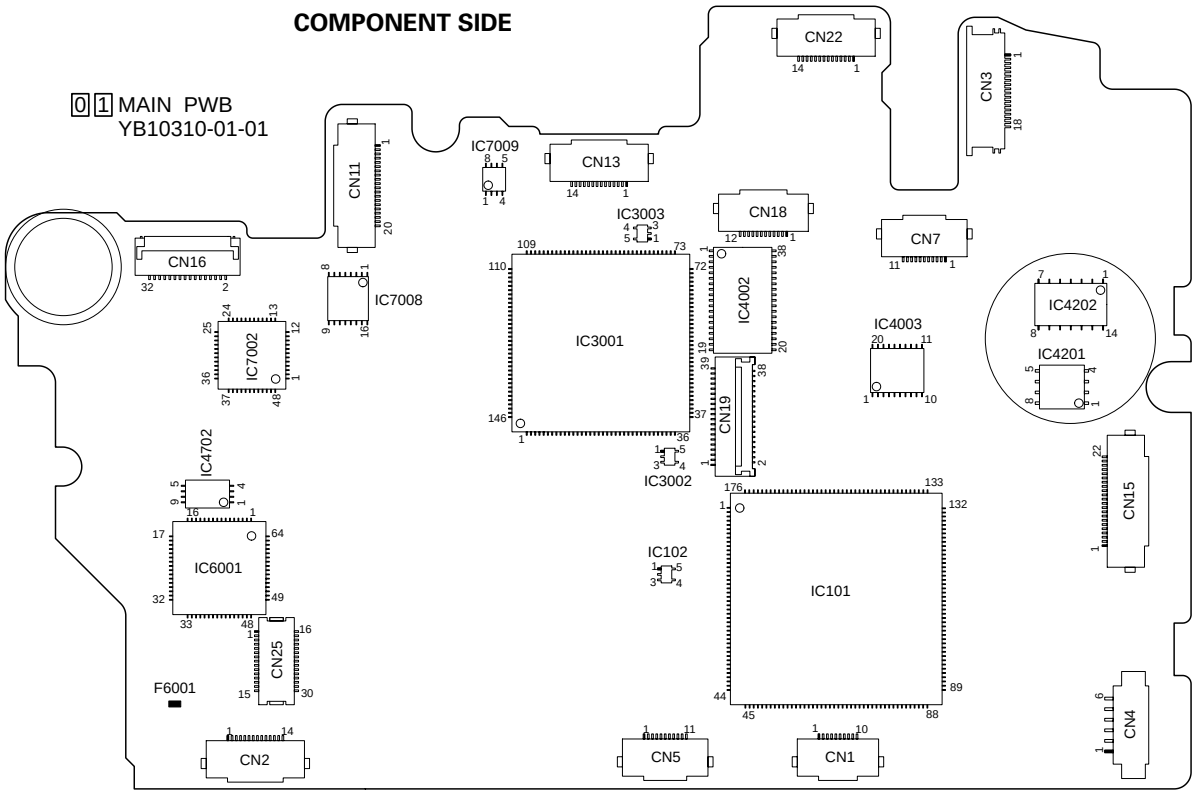

Fig. 3-1-3 FUSE location for MAIN board assembly (COMPONENT SIDE)

■ FUSE LOCATION FOR MONITOR BOARD ASSEMBLY

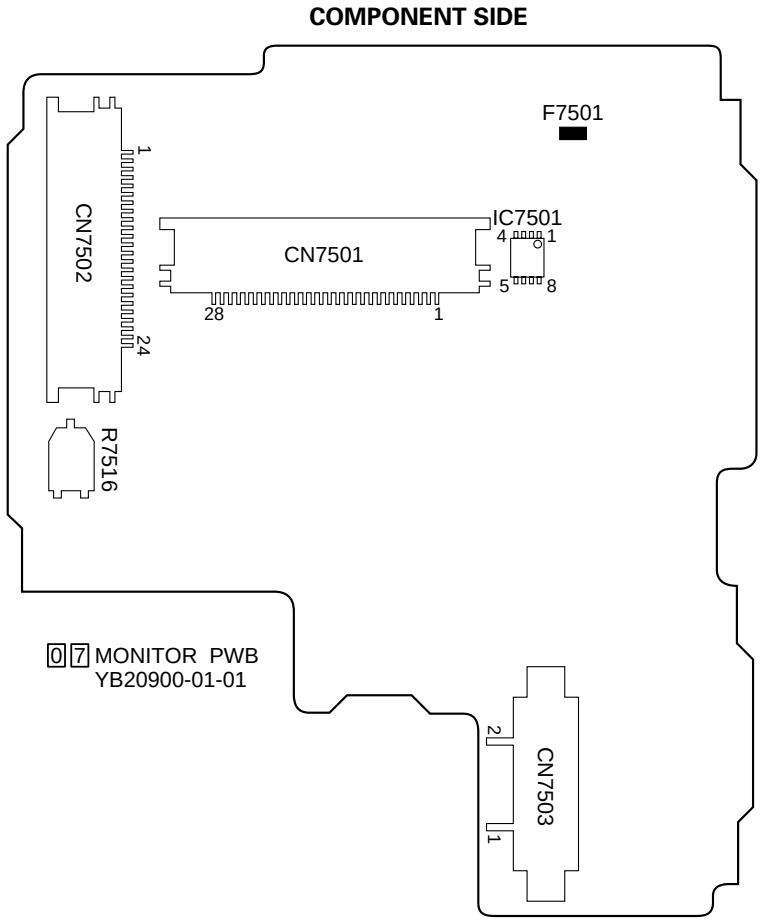

Fig. 3-1-4 FUSE location for MAIN board assembly (COMPONENT SIDE)

3.2 MONITOR ADJUSTMENT

Notes: *Unless otherwise specified, all measurement points and adjustment parts are located on MONITOR board.*

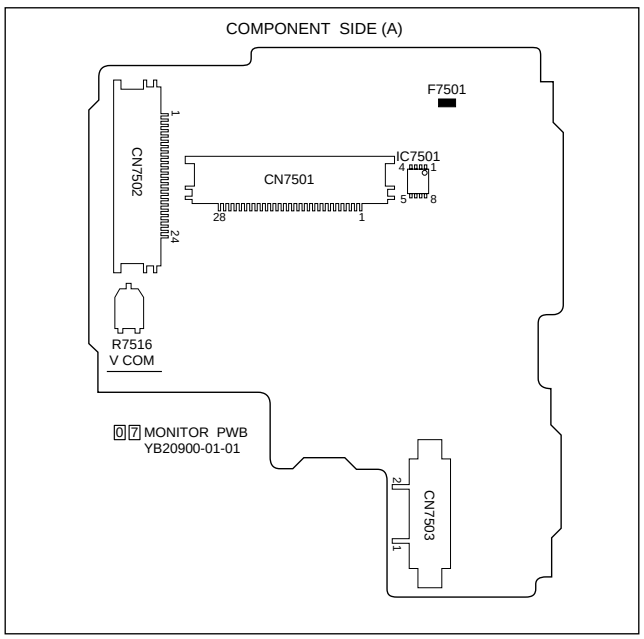

3.2.1 V COM

Signal	• Alignment tape • Stairstep
Mode	• PB
Equipment	• LCD MONITOR
Measurement point	• –
Adjusting part	• R7516 (V COM)
Specification	• Black level must correctly be reproduced on the LCD MONITOR. (There is a sharp contrast between black and white parts.)

(1) Adjust R7516 to make sharp contrast between black and white parts on the LCD MONITOR screen.
(2) Adjust R7516 so that black and white levels (patticularly black level in the contour) is sharply reproduced on the LCD MONITOR screen.

3.3 ELECTRONIC VIEWFINDER (E. VF) ADJUSTMENT

Notes:

- *Unless otherwise specified, all measurement points and adjustment parts are located on E. VF board.*
- *After adjustment or replacement of the deflection yoke or the centering magnet, fix it by the band as shown the figure below.*

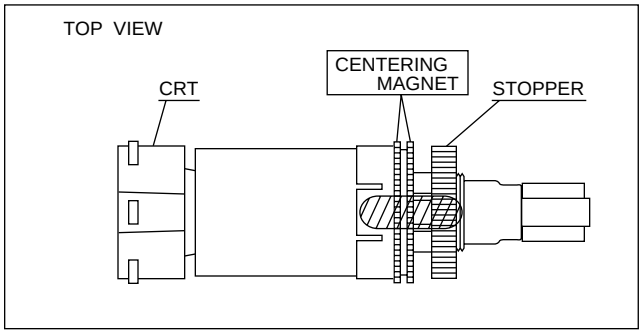

Fig. 3-3-1 E. VF

- *After adjustment is completed, compare the picture on the E. VF screen with the monitor TV.*

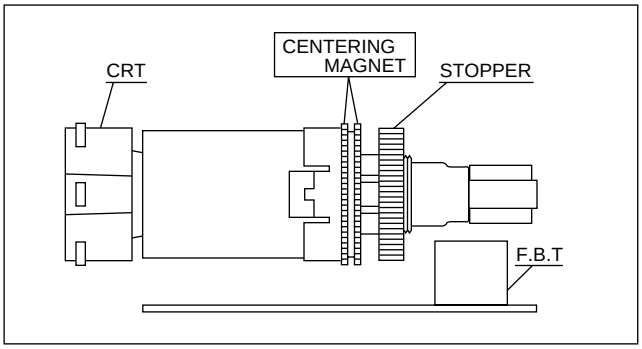

Fig. 3-3-2 E. VF

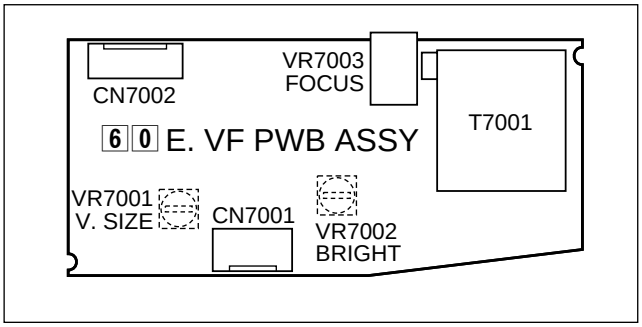

Fig. 3-3-3 E. VF board

3.3.1 Tilt

Subject	• Alignment tape • Stairstep
Mode	• PB
Equipment	• E. VF
Measurement point	• E. VF screen
Adjusting part	• Deflection yoke
Specification	• The picture is visible as same as monitor TV.

1) Put the deflection yoke to the most inner side of CRT neck first. Then fix the stopper temporary.
2) Adjust the tilt of picture on the E. VF screen by tilting the deflection yoke.
3) Fix the stopper completely.

3.3.2 Centering

Subject	• Alignment tape • Stairstep
Mode	• PB
Equipment	• E. VF
Measurement point	• E. VF screen
Adjusting part	• Centering magnet (CRT assy)
Specification	• The center of the E. VF screen

1) While observing the viewfinder screen, adjust the centering magnet to locate the stairstep in the center of the viewfinder screen.

3.3.3 Vertical scanning

Subject	• Camera picture
Mode	• EE
Equipment	• E. VF
Measurement point	• E. VF screen
Adjusting part	• VR7001 (V. SIZE)
Specification	• Normal picture amplitude

1) Observing the viewfinder screen, adjust VR7001 for normal picture amplitude.

3.3.4 Brightness

Subject	• –
Mode	• EE • Lens closed
Equipment	• E. VF
Measurement point	• E. VF screen
Adjusting part	• VR7002 (BRIGHT)
Specification	• The CRT raster is just barely visible

1) Close the lens with the cap and adjust VR7002 so that the raster of the CRT is just visible in the E. VF.

3.3.5 Focus

Subject	• Camera picture
Mode	• EE
Equipment	• E. VF
Measurement point	• E. VF screen
Adjusting part	• VR7003 (FOCUS)
Specification	• The center area is clear and defined

1) While observing the viewfinder screen, adjust VR7003 so that the picture at the central area of the screen is clear and defined.

SECTION 5
PARTS LIST

SAFETY PRECAUTION

Parts identified by the ⚠ symbol are critical for safety. Replace only with specified part numbers.

5.1 PACKING AND ACCESSORY ASSEMBLY <M1>

The instruction manual to be provided with this product will differ according to the destination.

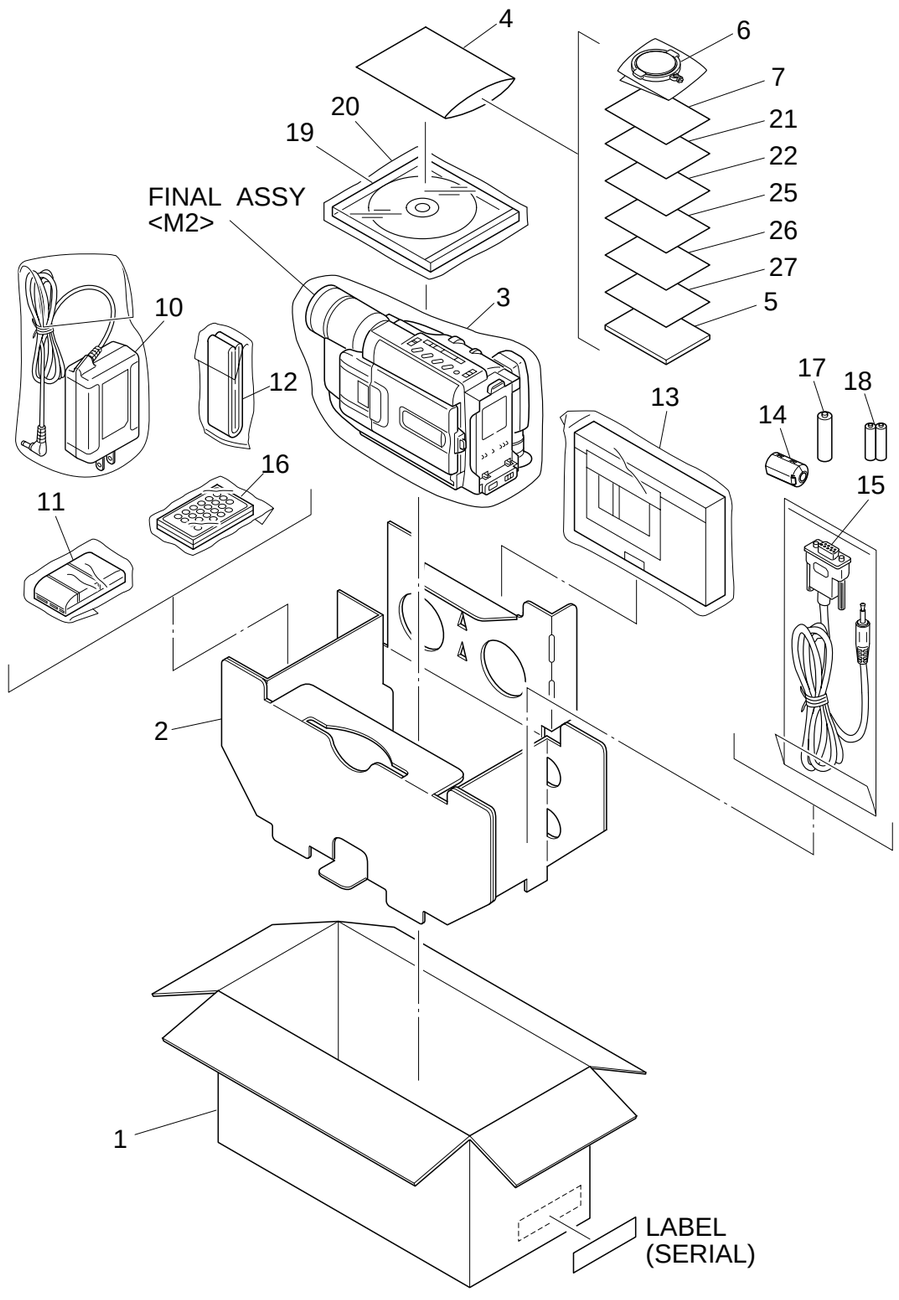

#	⚠	REF No.	PART No.	PART NAME, DESCRIPTION

****

PACKING AND ACCESSORY ASSEMBLY <M1>

	1	LY32179-002A	PACKING CASE,A,B
		LY32179-004A	PACKING CASE,C,D
		LY32179-005A	PACKING CASE,E,F
	2	LY32065-001A	CUSHION
	3	LY30023-002A	POLY BAG
	4	QPA02003506	POLY BAG
⚠	5	LYT0689-001A	IB(EN),A,B,C,D
⚠		LYT0705-001A	IB(EN),E,F
⚠		LYT0706-001A	IB(FR),B,D
⚠		LYT0721-001A	IB(FR),F
	6	LY41538-002B	LENS CAP
	7	BT-51020-2	REGIST.CARD,A,C,E
		BT-52004-1	WARRANTY CARD,B,D,F
⚠	10	LY20739-001A	AC ADAPTER,AP-V10U
⚠	11	YQ10629A	BATTERY PACK,BN-V11U
	12	LY20186-001A	SHOULDER STRAP
	13	YQ31963A-3	CASSETTE ADAPTER
		or YQ31963B-3	CASSETTE ADAPTER
	14	QQR0491-002	CORE FILTER,E,F
	15	QAM0084-001	PC CONNECTION CABLE,E,F
	16	LY42129-001A	REMOTE CONTROL UNIT,RM-V715U,C,D,E,F
	17	–	AA(R6)BATTERY,FOR CASSETTE ADAPTER
	18	–	AAA(R03)BATTERY,FOR RCU,C,D
	19	LY31133-001B	CD ROM E,F
	20	LY30023-010A	POLY BAG,E,F
	21	BT-20071B	SER.NET CARD,B,D,F
	22	YU30843-4	SOFT WARE PERM.,E,F
⚠	25	LYT0309-001B	IB(SOFT)(EN),E,F
	26	LYT0309-004A	SHEET(INSTALL),E,F
	27	LYT0378-003A	SHEET(AGREMENT),F

- **INSTRUCTIONS**
  EN ..... ENGLISH
  FR ..... FRENCH

MODEL	MARK
GR-AXM230U	A
GR-AXM230UC	B
GR-SXM330U	C
GR-SXM330UC	D
GR-SXM930U	E
GR-SXM930UC	F

5.2 FINAL ASSEMBLY <M2>

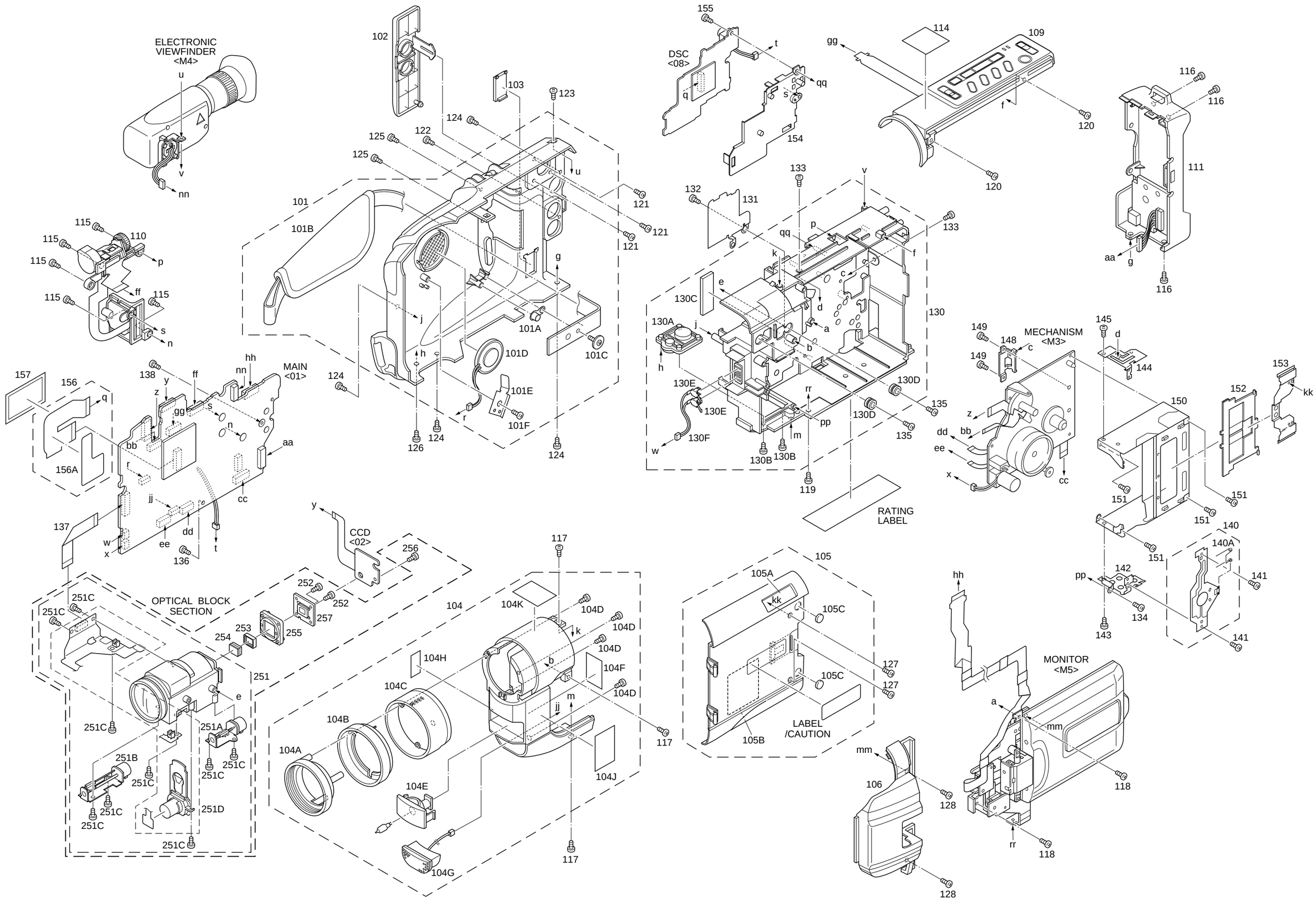

# ⚠ REF No.	PART No.	PART NAME, DESCRIPTION
**********		

FINAL ASSEMBLY <M2>

101	LY20684-005A	LOWER CASE ASSY,A,B
	LY20684-008A	LOWER CASE ASSY,C,D
	LY20684-009A	LOWER CASE ASSY,E,F
101A	LY40081-001A	CAPACITOR
101B	LY20682-001A	GRIP BELT
101C	LY30018-003A	SPECIAL SCREW
101D	QAS0061-001	SPEAKER
101E	LY42764-001B	HOLDER(SPEAKER)
101F	QYSLSF2050Z	SCREW
102	LY31945-001B	COVER(JACK)
103	LY31946-001A	COVER(JIG)
104	LY20683-005B	FRONT COVER ASSY,C,D
	LY20683-008B	FRONT COVER ASSY,A,B
	LY20683-015A	FRONT COVER ASSY,E,F
104A	LY31937-001A	HOOD
104B	LY31938-001A	COVER(HOOD)
104C	LY31936-001A	RING
104D	QYSLSF2060D	SCREW,X4
104E	LY32040-001A	DC LIGHT
104F	LY30029-0B4A	SPACER(A)
104G	LY32043-001A	MICROPHONE
104H	YQ44341-6	CAUTION LABEL
104J	LY32058-002A	STICKER(A)
104K	LY32060-001A	STICKER(C),A,B
	LY32060-003A	STICKER(C),C,D,E,F
105	LY20694-001A	CASS.COVER(M)ASSY,A,B
	LY20694-002A	CASS.COVER(M)ASSY,E,F
	LY20694-004A	CASS.COVER(M)ASSY,C,D
105A	LY42883-001A	MARK
105B	LY40559-001A	SHIELD SHEET
105C	LY40076-001A	SPACER,X2
106	LY10257-015A	UPPER CASE(M),C,D
	LY10257-018A	UPPER CASE(M),E,F
	LY10257-019A	UPPER CASE(M),A,B
109	LY20614-008B	TOP OPE UNIT,E,F
	LY20614-010B	TOP OPE UNIT,A,B
	LY20614-012B	TOP OPE UNIT,C,D
110	LY20613-001A	ZOOM UNIT
111	LY20615-005A	REAR UNIT
114	LY32061-004A	STICKER(D),E,F
	LY32061-005A	STICKER(D),A,B,C,D
115	QYSLSF2060D	SCREW,X5
116	QYSLSF2060D	SCREW,X3
117	QYSLSF2060D	SCREW,X3
118	QYSLSF2060D	SCREW,X2
119	QYSLSP2030D	SCREW
120	QYSLSF2060D	SCREW,X2
121	QYSLSF2050Z	SCREW,X3
122	QYSLSF2060D	SCREW
123	QYSLSF2060D	SCREW
124	QYSLSF2060D	SCREW,X4
125	QYSLSF2060D	SCREW,X2
126	QYSLSF2060D	SCREW
127	QYSLSP2030D	SCREW,X2
128	QYSLSP2030D	SCREW,X2
130	LY20678-001A	FRAME ASSY
130A	YQ31843	BASE
130B	QYSLSF2060D	SCREW,X2
130C	LY30029-0A4A	SPACER(A)
130D	LY41082-001A	CUSHION(OP),X2
130E	YQ43810-1-1	CONTACT(LIGHT),X2
130F	WJM0167-001A	E-SI C WIRE C-F
131	LY42758-001A	S.CASE(MAIN)
132	QYSPSTU1725M	SCREW
133	LY41173-001A	SPECIAL SCREW,X2
134	QYSLSF1750D	SCREW
135	LY30018-050A	SPECIAL SCREW,X2
136	QYSLSF2060D	SCREW
137	WJT0039-001A	E-CARD WIRE,OP-MAIN CN15
138	QYSLSF2060D	SCREW
140	LY31790-001A	FRONT FRAME ASSY
140A	YQ44144-1-1	TAPE GUIDE
141	SPSH1725M	SCREW,X2
142	LY31807-001A	SIDE BRACKET L
143	LY42722-003A	SCREW
144	LY31806-001A	SIDE BRACKET R
145	LY42722-003A	SCREW
148	LY31816-001A	BRACKET(MECHA)
149	LY42722-003A	SCREW,X2
150	LY31808-001A	CASS.HOUSING ASSY
151	LY42722-003A	SCREW,X4
152	LY30176-001A	CASS.COV.INSIDE
153	LY31956-001A	BRACKET(C.COV)
154	LY20645-001A	HOLDER(DSC P.),E,F
155	QYSLSF2060D	SCREW,E,F
156	LY42875-001A	FPC(DSC) ASSY,E,F
156A	LY42876-001A	S.SHEET(DSC FPC),E,F
157	YU40341	INSULATER,E,F

– OPTICAL BLOCK SECTION –

251	LY30948-003A	OP BLOCK ASSY
251A	PTY30948-002	FOCUS MOTOR
251B	PTY30948-321	ZOOM MOTOR
251C	PTY30151-016	SCREW,X9
251D	PTY30948-006	IRIS MOTOR UNIT,INCL.FPC
252	QYSPSGU2080Z	SCREW,X2
253	LY31441-001A	SPACER RUBBER
254	LY41757-001A	OPTICAL LPF
255	LY20346-001A	CCD SPACER
256	LY30018-072A	SPECIAL SCREW
257	LYH40018-006A	CCD BASE ASSY,C,D,E,F
	LYH40047-001A	CCD BASE ASSY,A,B

5.3 MECHANISM ASSEMBLY <M3>

BEWARE OF BOGUS PARTS
Parts that do not meet specifications may cause trouble in regard to safety and performance. We recommend that genuine JVC parts be used.

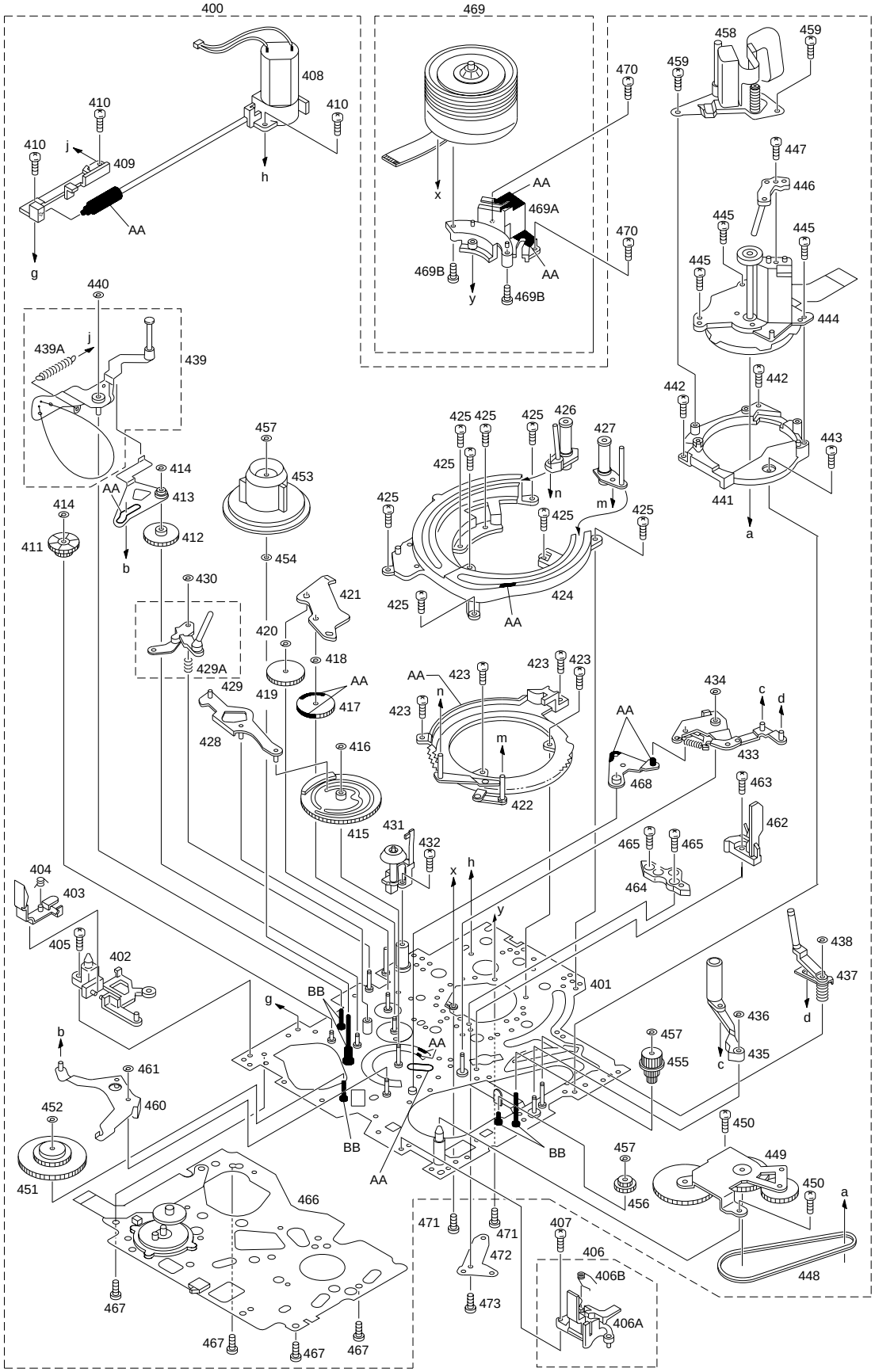

Classification	Part No.	Symbol in drawing
Grease	KYODO-SH-P	AA
Oil	YTU94027	BB

NOTE: The section marked in **AA** and **BB** indicate lubrication and greasing areas.

# ⚠ REF No.	PART No.	PART NAME, DESCRIPTION

****

MECHANISM ASSEMBLY <M3>

400	YMA0030A-E	MECHA(B)ASSY,A,B
	YMA0031A-E	MECHA(B)ASSY,C,D,E,F
401	LY20612-001A	MAIN DECK ASSY
402	LY31817-001A	CASS.GUIDE(L)
403	LY31815-001A	SW.LEVER(L)
404	LY42581-001A	TORSION SPRING
405	LY42722-001A	SCREW
406	YQ44339A-7	CASS.GUIDE(R)ASSY,C,D,E,F
406A	YQ32162-1-3	SW.LEVER(R),C,D,E,F
406B	YQ44340-1-4	TORSION SPRING,C,D,E,F
407	LY42819-001A	SCREW,C,D,E,F
408	LY31826-001A	MOTOR BRACKET ASSY
409	YQ20793	WORM BRACKET
410	LY42722-001A	SCREW,X3
411	LY31925-001A	WHEEL GEAR
412	LY42730-001A	MIDDLE GEAR
413	LY42521-001A	CANCEL LEVER ASSY
414	LY42754-003A	SLIT WASHER,X2
415	YQ20827-2-1	CONTROL CAM
416	PQM30017-25	SLIT WASHER
417	LY42733-001A	LOADING GEAR(T)ASSY
418	LY42754-003A	SLIT WASHER
419	LY42732-001A	LOADING GEAR(S)ASSY
420	LY42754-003A	SLIT WASHER
421	LY42403-001A	COVER PLATE
422	LY42452-001A	LOADING RING ASSY
423	LY42728-001A	SCREW,X4
424	LY10239-001A	GUIDE RAIL
425	LY42728-001A	SCREW,X8
426	LY30161-001B	POLE BASE(S)ASSY
427	LY30162-002A	POLE BASE(T)ASSY
428	LY42523-001A	DRIVE LEVER ASSY
429	LY42545-001A	SLANT ARM ASSY
429A	LY42547-001A	TOR.SPRING(S)
430	LY42754-003A	SLIT WASHER
431	LY42739-001A	ROLLER BASE ASSY
432	LY42722-001A	SCREW
433	LY42494-001A	LINK ARM ASSY
434	PQM30017-25	SLIT WASHER
435	LY40018-002A	PINCH ROLLER ARM ASSY
436	PQM30017-25	SLIT WASHER
437	LY42541-001A	TAKE-UP GUIDE ARM ASSY
438	LY42754-003A	SLIT WASHER
439	LY42571-001A	TENSION ARM ASSY
439A	LY42669-001A	TENSION SPRING
440	LY42754-003A	SLIT WASHER
441	YQ20797-1-5	MOTOR BASE
442	LY42722-001A	SCREW,X2
443	YQ44460	SCREW
444	QAR0116-001	CAPSTAN MOTOR
445	YQ44304	TAPPING SCREW,X3
446	LY42731-001A	SLANT POLE BASE ASSY
447	YQ44304	TAPPING SCREW
448	YQ43710-2	TIMING BELT
449	LY42678-001A	CENTER PULLEY UNIT
450	LY42722-002A	SCREW,X2
451	LY42670-001A	SUPPLY CLUTCH ASSY
452	LY42754-003A	SLIT WASHER
453	YQ31861-1-7	REEL DISC
454	LY42755-001A	WASHER
455	LY31924-001A	TAKE-UP GEAR
456	LY42738-001A	BRAKE SUB GEAR
457	LY42754-003A	SLIT WASHER,X3
458	LY42544-001A	A/C HEAD UNIT
459	SPSN1750Z	SCREW,X2
460	LY42517-001A	EJECT LEVER ASSY
461	LY42754-003A	SLIT WASHER
462	YQ31833-1-1	LED GUIDE
463	LY42722-001A	SCREW
464	LY42729-001A	DRUM SPACER
465	LY42722-001A	SCREW,X2
466	QSW0888-001	ROTARY ENCODER,A,B
	QSW0888-002	ROTARY ENCODER,C,D,E,F
467	LY42722-002A	SCREW,X4
468	LY31814-001A	LINK LEVER
469	YDV2098A	DRUM ASSY
469A	YDM1003-1-5	CATCHER
469B	QYSPSPU1735M	SCREW,X2
470	LY42722-001A	SCREW,X2
471	SPSH1740Z	SCREW,X2
472	YU42051	BRUSH
473	LY42722-003A	SCREW

5.4 ELECTRONIC VIEWFINDER ASSEMBLY <M4> (SXM930U/UC)

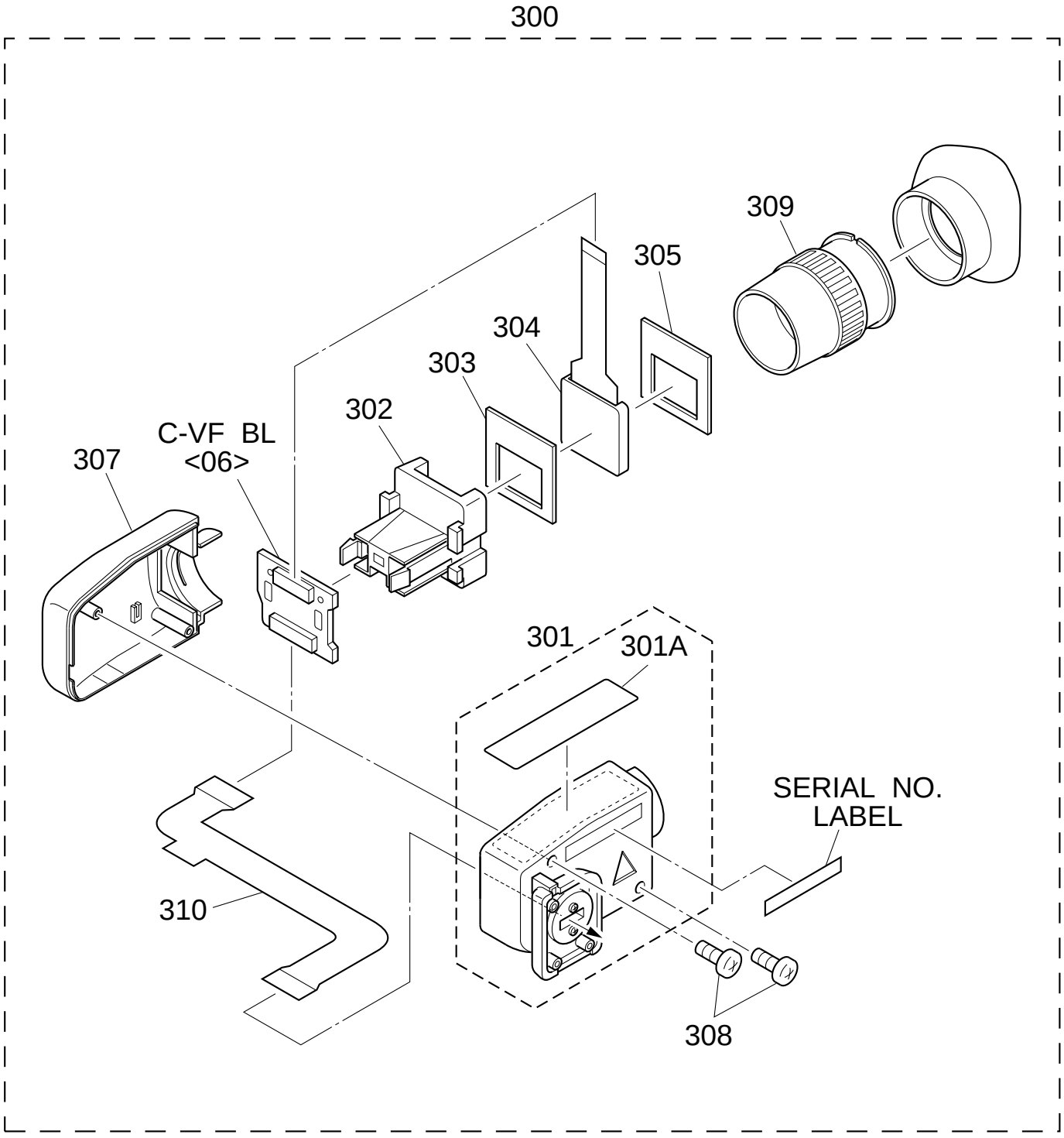

#	⚠	REF No.	PART No.	PART NAME, DESCRIPTION
**********				
			ELECTRONIC VIEWFINDER ASSEMBLY <M4> E,F	
	⚠	300	LYH20242-001A	E.VF ASSY
	⚠	301	LY32068-001A	BOTTOM CASE ASSY
		301A	LY42882-001A	LABEL(COL/CAUT)
		302	LY31942-001A	HOLDER(LED)
		303	LY42221-001C	SPACER(HOLDER)
		304	QLD0117-001	LCD MODULE
		305	LY42171-001A	SPACER(LED)
	⚠	307	LY10137-001C	TOP CASE
		308	QYSPSGT1760D	TAP SCREW,X2
		309	LY20309-001B	EYE P. ASSY
		310	QAL0269-001	FPC

5.4 ELECTRONIC VIEWFINDER ASSEMBLY <M4> (AXM230U/UC/SXM330U/UC)

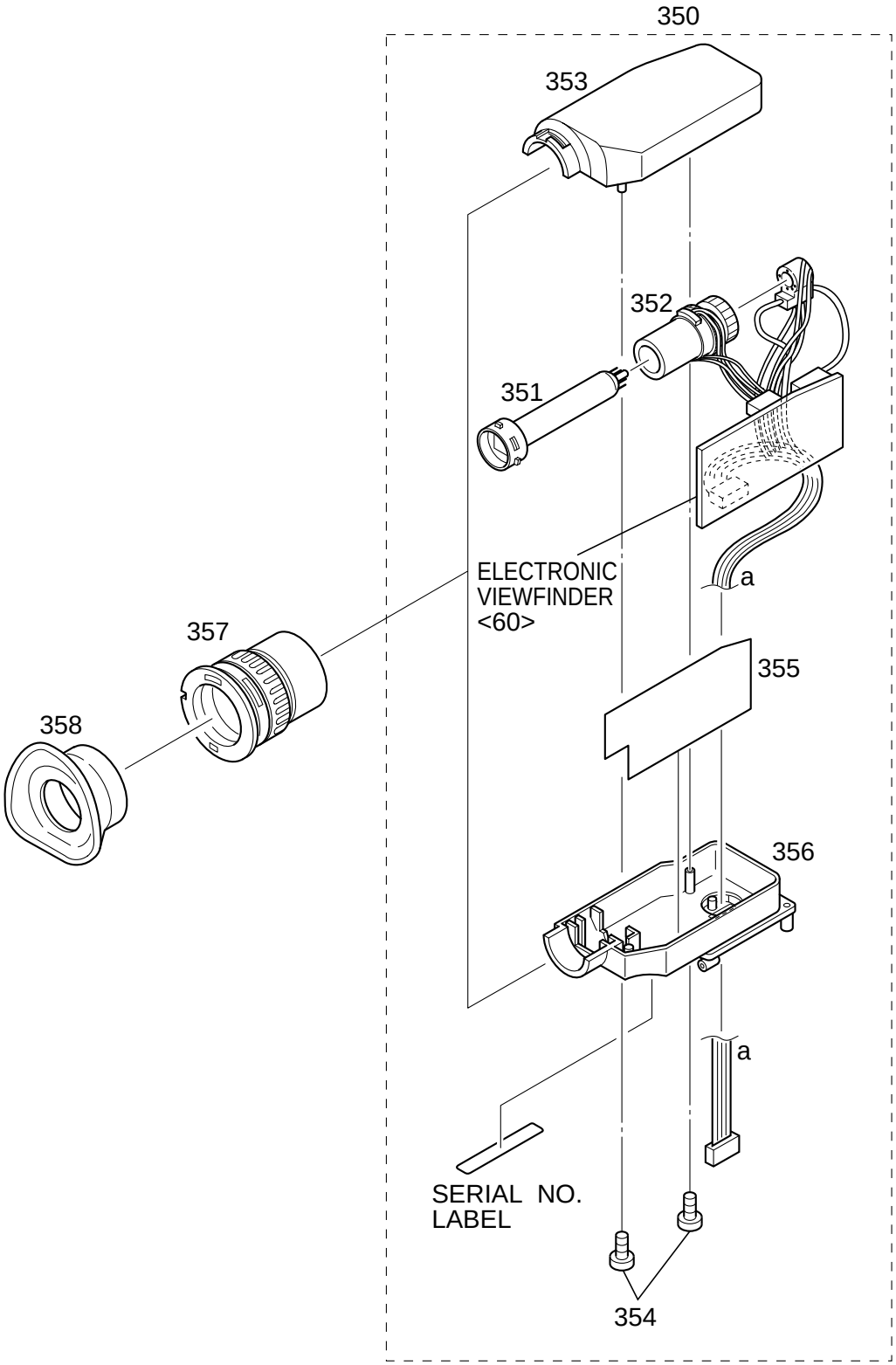

#	⚠	REF No.	PART No.	PART NAME, DESCRIPTION
**********				
				ELECTRONIC VIEWFINDER ASSEMBLY <M4> A,B,C,D
	⚠	350	LY20701-001A	E.VF ASSY
	⚠	351	PEDP0193	CRT
	⚠	352	QQD0026-001	DEFLECTION YOKE
	⚠	353	LY10165-001B	CASE(L)
		354	QYSPSGU1760M	SCREW,X2
	⚠	355	LY41280-001A	SHEET(SHIELD)
	⚠	356	PTY20701-011	BOTTOM CASE ASSY
		357	PTY20374-201	LENS ASSY
		358	LY20411-001A	EYE CAP

5.5 MONITOR ASSEMBLY <M5>

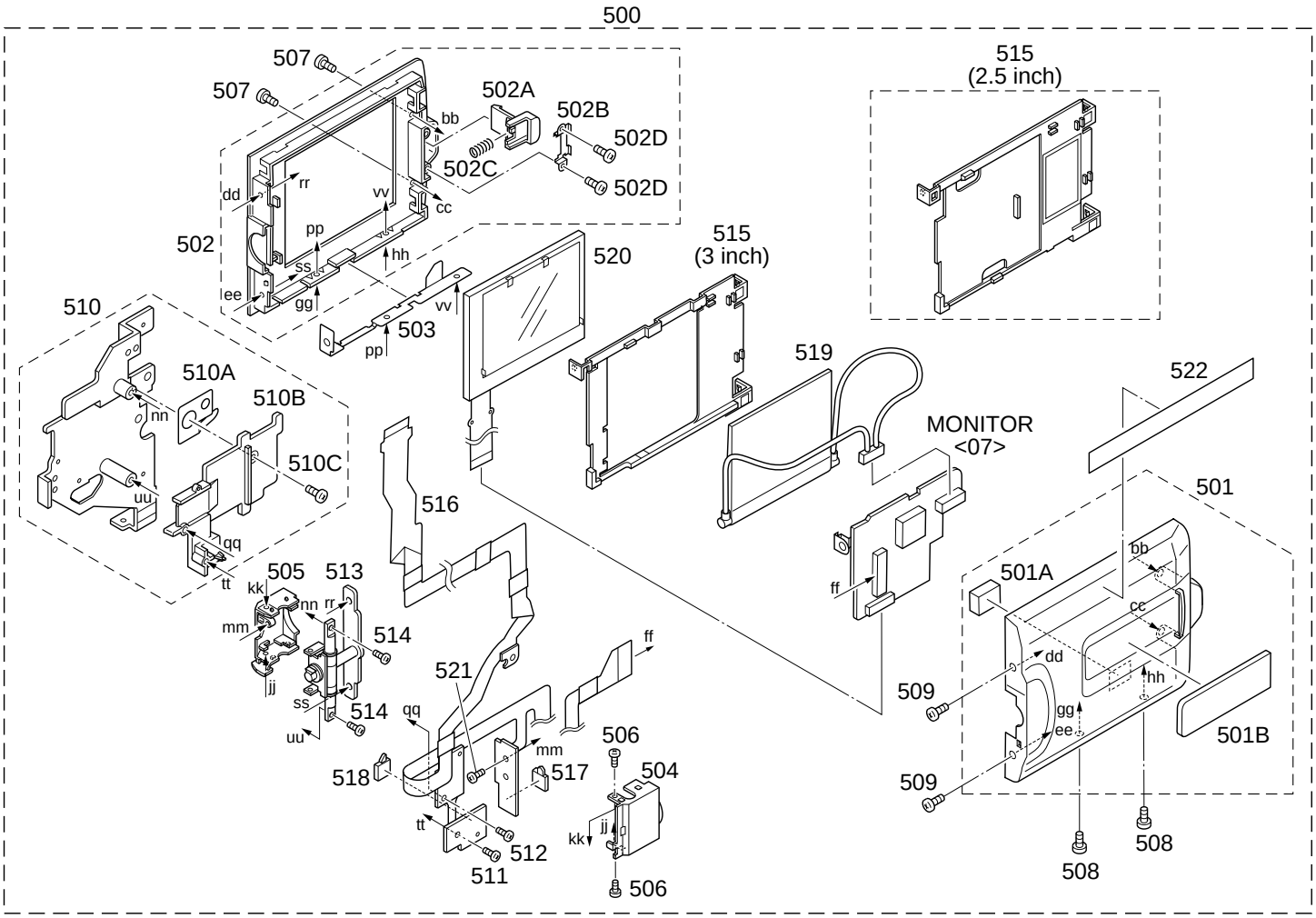

# ⚠	REF No.	PART No.	PART NAME, DESCRIPTION
**********			
		MONITOR ASSEMBLY <M5>	
⚠	500	LYH20217-006A	MONITOR ASSY,A,B
⚠		LYH20217-014A	MONITOR ASSY,E,F
⚠		LYH20217-015A	MONITOR ASSY,C,D
⚠	501	LY20679-004A	M.COVER ASSY,A,B
⚠		LY20679-008A	M.COVER ASSY,E,F
⚠		LY20679-009A	M.COVER ASSY,C,D
	501A	LY30029-0B8A	SPACER(A)
	501B	LY32022-001A	WINDOW,C,D,E,F
		LY32022-003A	WINDOW,A,B
	502	LY32035-001A	M.CASE(3) ASSY,E,F
		LY32036-001A	M.CASE(2.5)ASSY,A,B,C,D
	502A	LY31954-001A	KNOB(LOCK)
	502B	LY42760-001A	BKT(LOCK)
	502C	LY30002-043A	COMPRES.SPRING
	502D	LY30018-063A	SPECIAL SCREW,X2
	503	LY31959-001A	BKT(M.CASE)
	504	LY31939-001A	HINGE COVER(U),E,F
		LY31939-003A	HINGE COVER(U),A,B
		LY31939-004A	HINGE COVER(U),C,D
	505	LY31940-001A	HINGE COVER(L)

# ⚠	REF No.	PART No.	PART NAME, DESCRIPTION
	506	LY30018-0C9A	SPECIAL SCREW,X2
	507	LY30018-011A	SPECIAL SCREW,X2
	508	LY30018-0C9A	SPECIAL SCREW,X2
	509	LY30018-0C5A	SPECIAL SCREW,X2
	510	LY32034-003A	BKT(UPPER)ASSY
	510A	LY42761-001A	EARTH PLATE
	510B	LY20652-003A	HOLDER
	510C	QYSLSP2025D	SCREW
	511	QYSLSF2040D	SCREW
	512	QYSLSP2070D	SCREW
	513	LY31957-001A	HINGE ASSY
	514	LY30018-090A	SPECIAL SCREW,X2
	515	LY20647-001A	HOLDER(3 PWB),E,F
		LY20672-001B	HOLDER(2.5PWB),A,B,C,D
	516	QAL0268-002	FPC
	517	NSW0095-001X	DETECT SWITCH
	518	NSW0105-001X	DETECT SWITCH
	519	QLL0093-001	BACK LIGHT,A,B,C,D
		QLL0094-001	BACK LIGHT,E,F
	520	QLD0118-001	LCD MODULE,E,F
		QLD0176-001	LCD MODULE,A,B,C,D
	521	LY30018-063A	SPECIAL SCREW
	522	LY32059-001A	STICKER(B),A,B
		LY32059-002A	STICKER(B),C,D,E,F

5.6 ELECTRICAL PARTS LIST

MODEL	MARK	MODEL	MARK
GR-AXM230U	A	GR-SXM330UC	D
GR-AXM230UC	B	GR-SXM930U	E
GR-SXM330U	C	GR-SXM930UC	F

#	⚠	REF No.	PART No.	PART NAME, DESCRIPTION

****

MAIN BOARD ASSEMBLY <01>

	PW	YB10310UC-01	MAIN BOARD ASSY,A,B
		YB10310UD-01	MAIN BOARD ASSY,C,D
		YB10310UG-02	MAIN BOARD ASSY,E,F
	IC101	UPD703039-028	IC(MICRO C ROM)
		or UPD70F3040-028	IC(MICRO C ROM)
	IC102	TC7S86FU	IC(DIGITAL)
		or SN74AHC1G86K	IC
		or MC74VHC1G86DF	IC
	IC104	AT25080N-10SC-X	IC
		or X25170S8I-2.5-X	IC
		or 25LC080-I/SN-X	IC
	IC105	M62367GP	IC
	IC106	IC-PST9327U-X	IC
	IC107	RS5C314	IC
⚠	IC1601	BD6630KV	IC
	IC1801	PIC-26043S	IR DETECT UNIT,C,D,E,F
	IC2001	MC74AC04DT	IC
	IC2401	NJM2073M-XE	IC
	IC3001	JCY0130	IC
	IC3002	74HC1G04GW	IC
	IC3501	HA118224F	IC
	IC4001	JCY0149	IC
	IC4002	TMS4C2973-28-X	IC,C,D,E,F
	IC4003	UPD6467GR-506-X	IC(MICRO C ROM)
	IC4201	UPC358G2/5/-W	IC
	IC4202	BA10324AF-XE	IC
	IC4251	BA10358F-XE	IC
	IC4501	UPD16835G3	IC
	IC5201	HD49326BF	IC
	IC5202	JCY0098	IC
	IC6001	FA3698F	IC
	IC7001	CXD3518R	IC,E,F
	IC7002	MN5814	IC
	IC7005	BA4558F	IC,E,F
	IC7006	BA4558F	IC
	IC7007	TC7S04FU	IC(DIGITAL),A,B,C,D
		or MC74VHC1G04DF	IC,A,B,C,D
		or SN74AHC1G04K	IC,A,B,C,D
	IC7008	SN74LV4052APW	IC
	Q101	2SA1774/RS/-X	TRANSISTOR
	Q102	DTC144EE	TRANSISTOR
	Q103	2SC4617/QR/-X	TRANSISTOR
	Q104	DTC144EE	TRANSISTOR
	Q105	2SA1774/RS/-X	TRANSISTOR
	Q110	DTC144EE	TRANSISTOR
	Q111	DTC114EE	TRANSISTOR
	Q112	DTC114EE	TRANSISTOR
	Q113	2SC4097/QR/-X	TRANSISTOR
	Q2001	DTA114TE	TRANSISTOR
	Q2007	PUMX1	PAIR TRANSISTOR
		or UMX1N	PAIR TRANSISTOR
		or HN1C01FU/G/-X	PAIR TRANSISTOR
	Q2008	PUMT1	PAIR TRANSISTOR
		or HN1A01FU/G/-X	PAIR TRANSISTOR
	Q2021	DTC144EE	TRANSISTOR
	Q2022	DTC144EE	TRANSISTOR
	Q2023	2SC4617/QR/-X	TRANSISTOR
	Q2071	2SC4617/QR/-X	TRANSISTOR
	Q2401	DTC144EE	TRANSISTOR
	Q2402	DTA144EE	TRANSISTOR
	Q3002	PUMX1	PAIR TRANSISTOR
		or UMX1N	PAIR TRANSISTOR
		or HN1C01FU/G/-X	PAIR TRANSISTOR
	Q3003	2SC4097/QR/-X	TRANSISTOR
	Q3006	DTC144EE	TRANSISTOR,C,D,E,F
	Q3501	HN1C01FU/G/-X	PAIR TRANSISTOR
	Q3502	HN1C01FU/G/-X	PAIR TRANSISTOR
	Q3505	DTC144EE	TRANSISTOR,C,D,E,F
	Q3901	HN1A01FU/G/-X	PAIR TRANSISTOR
	Q4201	2SC4617/QR/-X	TRANSISTOR
	Q4251	RPM-22PB	PHOTO TRANSISTOR
	Q4501	DTC114EE	TRANSISTOR
	Q4701	PUMX1	PAIR TRANSISTOR
		or UMX1N	PAIR TRANSISTOR
		or HN1C01FU/G/-X	PAIR TRANSISTOR
	Q4702	2SC4617/QR/-X	TRANSISTOR
	Q4703	PUMX1	PAIR TRANSISTOR
		or UMX1N	PAIR TRANSISTOR
		or HN1C01FU/G/-X	PAIR TRANSISTOR
	Q4704	PUMT1	PAIR TRANSISTOR
		or HN1A01FU/G/-X	PAIR TRANSISTOR
	Q4705	2SC4617/QR/-X	TRANSISTOR,C,D,E,F
	Q4706	2SC4617/QR/-X	TRANSISTOR,C,D,E,F
	Q4707	2SC4617/QR/-X	TRANSISTOR,C,D,E,F
	Q4711	PUMX1	PAIR TRANSISTOR,C,D,E,F
		or HN1C01FU/G/-X	PAIR TRANSISTOR,C,D,E,F
		or UMX1N	PAIR TRANSISTOR,C,D,E,F
	Q4712	PUMT1	PAIR TRANSISTOR,C,D,E,F
		or HN1A01FU/G/-X	PAIR TRANSISTOR,C,D,E,F
	Q4713	PUMX1	PAIR TRANSISTOR,C,D,E,F
		or UMX1N	PAIR TRANSISTOR,C,D,E,F
		or HN1C01FU/G/-X	PAIR TRANSISTOR,C,D,E,F
	Q4714	PUMT1	PAIR TRANSISTOR,C,D,E,F
		or HN1A01FU/G/-X	PAIR TRANSISTOR,C,D,E,F
	Q4715	PUMX1	PAIR TRANSISTOR,C,D,E,F
		or HN1C01FU/G/-X	PAIR TRANSISTOR,C,D,E,F
		or UMX1N	PAIR TRANSISTOR,C,D,E,F
	Q6101	SSM6J07FU	MOS FET
	Q6106	HN1C01FU/G/-X	PAIR TRANSISTOR
	Q6107	SSM3J05FU	MOS FET
	Q6201	SSM6J07FU	MOS FET
	Q6301	CPH3304	MOS FET
	Q6306	SSM3K02F	MOS FET
	Q6307	2SC4617/QR/-X	TRANSISTOR
	Q6308	CPH3101	TRANSISTOR
	Q6401	SSM6J07FU	MOS FET
	Q6501	SSM6J07FU	MOS FET
	Q6601	CPH3304	MOS FET
	Q6608	DTC144EE	TRANSISTOR
	Q6621	HN1C01FU/G/-X	PAIR TRANSISTOR
	Q6622	2SA1577/QR/-X	TRANSISTOR
	Q6701	FX802	TRANSISTOR
	Q6702	2SC4097/QR/-X	TRANSISTOR
	Q6801	2SA1577/QR/-X	TRANSISTOR
	Q6811	2SB1121/TU/-X	TRANSISTOR
	Q7001	PUMX1	PAIR TRANSISTOR,E,F
	Q7003	PUMX1	PAIR TRANSISTOR
	Q7005	PUMX1	PAIR TRANSISTOR,E,F

#	⚠	REF No.	PART No.	PART NAME, DESCRIPTION	
		Q7011	PUMX1	PAIR TRANSISTOR	
		Q7013	PUMX1	PAIR TRANSISTOR	
		Q7015	PUMX1	PAIR TRANSISTOR	
		Q7017	2SC4617/QR/-X	TRANSISTOR	
		Q7018	2SA1774/QR/-X	TRANSISTOR	
		Q7019	2SC4617/QR/-X	TRANSISTOR	
		Q7020	2SA1774/QR/-X	TRANSISTOR	
		Q7022	DTC144EE	TRANSISTOR,A,B,C,D	
	⚠	D101	SB007W03Q	SB DIODE	
		D102	UDZS7.5B	ZENER DIODE	
		D105	1SS355	DIODE	
		D106	1SS355	DIODE	
		D107	SB007W03Q	SB DIODE	
		D3001	DAN222	DIODE,C,D,E,F	
		D5201	1SS355	DIODE,C,D,E,F	
		D5202	1SS355	DIODE,A,B	
		D6001	CRS03	SB DIODE	
		D6101	CRS03	SB DIODE	
		D6106	1SS357	SB DIODE	
		D6201	CRS03	SB DIODE	
		D6301	CRS03	SB DIODE	
		D6401	CRS03	SB DIODE	
		D6501	CRS03	SB DIODE	
		D6601	1SS383	SB DIODE	
		D6616	UDZS8.2B	ZENER DIODE	
		D7001	MA365	VARI CAP DIODE,E,F	
		D7002	MA365	VARI CAP DIODE	
		D7004	RB471E	SB DIODE	
		R101	NRSA63J-104X	MG RESISTOR	100kΩ,1/16W
	⚠	R104	NRSA63J-102X	MG RESISTOR	1kΩ,1/16W
		R105	NRSA63J-103X	MG RESISTOR	10kΩ,1/16W
		R106	NRSA63J-561X	MG RESISTOR	560Ω,1/16W
		R107	NRVA63D-153X	CMF RESISTOR	15kΩ,1/16W
		R108	NRVA63D-243X	CMF RESISTOR	24kΩ,1/16W
		R109	NRVA63D-183X	CMF RESISTOR	18kΩ,1/16W
		R110	NRSA63J-103X	MG RESISTOR	10kΩ,1/16W
		R111	NRSA63J-273X	MG RESISTOR	27kΩ,1/16W
		R112	NRSA63J-331X	MG RESISTOR	330Ω,1/16W
		R113	NRSA63J-562X	MG RESISTOR	5.6kΩ,1/16W
		R114	NRSA63J-821X	MG RESISTOR	820Ω,1/16W
		R115	NRSA63J-101X	MG RESISTOR	100Ω,1/16W
		R116	NRSA63J-102X	MG RESISTOR	1kΩ,1/16W
		R118	NRSA63J-103X	MG RESISTOR	10kΩ,1/16W
		R119	NRSA63J-103X	MG RESISTOR	10kΩ,1/16W
		R120	NRSA63J-273X	MG RESISTOR	27kΩ,1/16W
		R121	NRSA63J-273X	MG RESISTOR	27kΩ,1/16W
		R122	NRSA63J-393X	MG RESISTOR	39kΩ,1/16W
		R123	NRSA63J-104X	MG RESISTOR	100kΩ,1/16W
		R124	NRSA63J-104X	MG RESISTOR	100kΩ,1/16W
		R125	NRSA63J-273X	MG RESISTOR	27kΩ,1/16W
		R126	NRSA63J-153X	MG RESISTOR	15kΩ,1/16W
		R127	NRSA63J-221X	MG RESISTOR	220Ω,1/16W
		R128	NRSA63J-102X	MG RESISTOR	1kΩ,1/16W
		R129	NRSA63J-102X	MG RESISTOR	1kΩ,1/16W
		R130	NRSA63J-105X	MG RESISTOR	1MΩ,1/16W
		R131	NRSA63J-105X	MG RESISTOR	1MΩ,1/16W
		R132	NRSA63J-105X	MG RESISTOR	1MΩ,1/16W
		R133	NRSA63J-105X	MG RESISTOR	1MΩ,1/16W
		R134	NRSA63J-105X	MG RESISTOR	1MΩ,1/16W
		R135	NRSA63J-104X	MG RESISTOR	100kΩ,1/16W
		R136	NRSA63J-474X	MG RESISTOR	470kΩ,1/16W
		R138	NRSA63J-333X	MG RESISTOR	33kΩ,1/16W
		R139	NRSA63J-104X	MG RESISTOR	100kΩ,1/16W
		R140	NRSA63J-753X	MG RESISTOR	75kΩ,1/16W
		R141	NRSA63J-334X	MG RESISTOR	330kΩ,1/16W
		R142	NRSA63J-103X	MG RESISTOR	10kΩ,1/16W
		R143	NRSA63J-105X	MG RESISTOR	1MΩ,1/16W
		R144	NRSA63J-221X	MG RESISTOR	220Ω,1/16W
		R145	NRSA63J-222X	MG RESISTOR	2.2kΩ,1/16W
		R146	NRSA63J-474X	MG RESISTOR	470kΩ,1/16W
		R147	NRSA63J-472X	MG RESISTOR	4.7kΩ,1/16W
		R148	NRSA63J-0R0X	MG RESISTOR	0Ω,1/16W
		R149	NRSA63J-104X	MG RESISTOR	100kΩ,1/16W
		R150	NRSA63J-222X	MG RESISTOR	2.2kΩ,1/16W
		R151	NRSA63J-222X	MG RESISTOR	2.2kΩ,1/16W
		R152	NRSA63J-474X	MG RESISTOR	470kΩ,1/16W
		R153	NRSA63J-474X	MG RESISTOR	470kΩ,1/16W
		R158	NRSA63J-474X	MG RESISTOR	470kΩ,1/16W
		R159	NRSA63J-474X	MG RESISTOR	470kΩ,1/16W
		R160	NRSA63J-474X	MG RESISTOR	470kΩ,1/16W
		R161	NRSA63J-104X	MG RESISTOR	100kΩ,1/16W
		R162	NRSA63J-472X	MG RESISTOR	4.7kΩ,1/16W
		R163	NRSA63J-221X	MG RESISTOR	220Ω,1/16W
		R164	NRSA63J-472X	MG RESISTOR	4.7kΩ,1/16W
		R166	NRSA63J-103X	MG RESISTOR	10kΩ,1/16W
		R167	NRSA63J-183X	MG RESISTOR	18kΩ,1/16W
		R168	NRSA63J-562X	MG RESISTOR	5.6kΩ,1/16W
		R170	NRSA63J-333X	MG RESISTOR	33kΩ,1/16W
		R171	NRSA63J-104X	MG RESISTOR	100kΩ,1/16W
		R172	NRSA63J-151X	MG RESISTOR	150Ω,1/16W
		R173	NRSA63J-0R0X	MG RESISTOR	0Ω,1/16W
		R174	NRSA63J-0R0X	MG RESISTOR	0Ω,1/16W
		R175	NRSA63J-105X	MG RESISTOR	1MΩ,1/16W
		R176	NRSA63J-221X	MG RESISTOR	220Ω,1/16W
		R180	NRSA63J-331X	MG RESISTOR	330Ω,1/16W
		R182	NRSA63J-222X	MG RESISTOR	2.2kΩ,1/16W
		R183	NRSA63J-222X	MG RESISTOR	2.2kΩ,1/16W
		R184	NRSA63J-222X	MG RESISTOR	2.2kΩ,1/16W
		R188	NRSA63J-222X	MG RESISTOR	2.2kΩ,1/16W
		R190	NRSA63J-331X	MG RESISTOR	330Ω,1/16W
		R191	NRSA63J-0R0X	MG RESISTOR	0Ω,1/16W
		R192	NRSA63J-105X	MG RESISTOR	1MΩ,1/16W
		R194	NRSA63J-0R0X	MG RESISTOR,E,F	0Ω,1/16W
		R195	NRSA63J-0R0X	MG RESISTOR	0Ω,1/16W
		R1601	NRV142F-R33X	CMF RESISTOR	0.33Ω,1/4W
		R1602	NRV142F-R33X	CMF RESISTOR	0.33Ω,1/4W
		R1603	NRSA63J-154X	MG RESISTOR	150kΩ,1/16W
		R1604	NRSA63J-102X	MG RESISTOR	1kΩ,1/16W
		R1605	NRSA63J-102X	MG RESISTOR	1kΩ,1/16W
		R1606	NRSA63J-102X	MG RESISTOR	1kΩ,1/16W
		R1607	NRSA63J-104X	MG RESISTOR	100kΩ,1/16W
		R1608	NRSA63J-104X	MG RESISTOR	100kΩ,1/16W
		R1609	NRSA63J-333X	MG RESISTOR	33kΩ,1/16W
		R1610	NRSA63J-103X	MG RESISTOR	10kΩ,1/16W
		R1612	NRSA63J-392X	MG RESISTOR	3.9kΩ,1/16W
		R1613	NRSA63J-104X	MG RESISTOR	100kΩ,1/16W
		R1614	NRSA63J-333X	MG RESISTOR	33kΩ,1/16W
		R1615	NRSA63J-103X	MG RESISTOR	10kΩ,1/16W
		R1617	NRSA63J-183X	MG RESISTOR	18kΩ,1/16W
		R1618	NRSA63J-154X	MG RESISTOR	150kΩ,1/16W
		R1619	NRSA63J-471X	MG RESISTOR	470Ω,1/16W
		R1620	NRSA63J-684X	MG RESISTOR	680kΩ,1/16W

# ⚠ REF No.	PART No.	PART NAME, DESCRIPTION	
R1621	NRSA63J-102X	MG RESISTOR	1kΩ,1/16W
R1622	NRSA63J-224X	MG RESISTOR	220kΩ,1/16W
R1623	NRSA63J-223X	MG RESISTOR	22kΩ,1/16W
R1624	NRSA63J-104X	MG RESISTOR	100kΩ,1/16W
R1625	NRSA63J-104X	MG RESISTOR	100kΩ,1/16W
R1626	NRSA63J-104X	MG RESISTOR	100kΩ,1/16W
R1628	NRSA63J-0R0X	MG RESISTOR	0Ω,1/16W
R1629	NRSA63J-0R0X	MG RESISTOR	0Ω,1/16W
R1630	NRSA63J-0R0X	MG RESISTOR	0Ω,1/16W
R1631	NRSA63J-122X	MG RESISTOR	1.2kΩ,1/16W
R1632	NRSA63J-153X	MG RESISTOR	15kΩ,1/16W
R1633	NRSA63J-683X	MG RESISTOR	68kΩ,1/16W
R2001	NRSA63J-104X	MG RESISTOR	100kΩ,1/16W
R2002	NRSA63J-332X	MG RESISTOR	3.3kΩ,1/16W
R2003	NRSA63J-102X	MG RESISTOR	1kΩ,1/16W
R2004	NRSA63J-681X	MG RESISTOR	680Ω,1/16W
R2005	NRSA63J-272X	MG RESISTOR	2.7kΩ,1/16W
R2006	NRSA63J-102X	MG RESISTOR	1kΩ,1/16W
R2011	NRSA63J-101X	MG RESISTOR	100Ω,1/16W
R2012	NRSA63J-101X	MG RESISTOR	100Ω,1/16W
R2021	NRSA63J-103X	MG RESISTOR	10kΩ,1/16W
R2022	NRSA63J-334X	MG RESISTOR	330kΩ,1/16W
R2023	NRSA63J-151X	MG RESISTOR	150Ω,1/16W
R2024	NRVA63D-133X	CMF RESISTOR	13kΩ,1/16W
R2025	NRSA63J-823X	MG RESISTOR	82kΩ,1/16W
R2026	NRSA63J-0R0X	MG RESISTOR	0Ω,1/16W
R2027	NRSA63J-102X	MG RESISTOR	1kΩ,1/16W
R2028	NRSA63J-102X	MG RESISTOR	1kΩ,1/16W
R2029	NRSA63J-0R0X	MG RESISTOR	0Ω,1/16W
R2030	NRSA63J-104X	MG RESISTOR	100kΩ,1/16W
R2031	NRSA63J-332X	MG RESISTOR	3.3kΩ,1/16W
R2032	NRSA63J-270X	MG RESISTOR	27Ω,1/16W
R2051	NRSA63J-102X	MG RESISTOR	1kΩ,1/16W
R2071	NRSA63J-473X	MG RESISTOR	47kΩ,1/16W
R2072	NRSA63J-562X	MG RESISTOR	5.6kΩ,1/16W
R2401	NRSA63J-683X	MG RESISTOR	68kΩ,1/16W
R2402	NRSA63J-122X	MG RESISTOR	1.2kΩ,1/16W
R2403	NRSA63J-2R2X	MG RESISTOR	2.2Ω,1/16W
R2404	NRSA63J-2R2X	MG RESISTOR	2.2Ω,1/16W
R2405	NRSA63J-473X	MG RESISTOR	47kΩ,1/16W
R2406	NRSA63J-473X	MG RESISTOR	47kΩ,1/16W
R3001	NRSA63J-105X	MG RESISTOR	1MΩ,1/16W
R3002	NRVA63D-471X	CMF RESISTOR	470Ω,1/16W
R3004	NRVA63D-273X	CMF RESISTOR	27kΩ,1/16W
R3006	NRVA63D-561X	CMF RESISTOR	560Ω,1/16W
R3007	NRVA63D-153X	CMF RESISTOR	15kΩ,1/16W
R3008	NRSA63J-393X	MG RESISTOR	39kΩ,1/16W
R3009	NRSA63J-272X	MG RESISTOR	2.7kΩ,1/16W
R3010	NRSA63J-332X	MG RESISTOR	3.3kΩ,1/16W
R3014	NRSA63J-681X	MG RESISTOR	680Ω,1/16W
R3015	NRSA63J-332X	MG RESISTOR	3.3kΩ,1/16W
R3016	NRSA63J-332X	MG RESISTOR	3.3kΩ,1/16W
R3018	NRSA63J-271X	MG RESISTOR	270Ω,1/16W
R3023	NRSA63J-331X	MG RESISTOR	330Ω,1/16W
R3027	NRSA63J-103X	MG RESISTOR,C,D,E,F	10kΩ,1/16W
R3028	NRVA63D-472X	CMF RESISTOR	4.7kΩ,1/16W
R3029	NRSA63J-0R0X	MG RESISTOR	0Ω,1/16W
R3030	NRSA63J-561X	MG RESISTOR	560Ω,1/16W
R3034	NRSA63J-220X	MG RESISTOR	22Ω,1/16W
R3038	NRSA63J-392X	MG RESISTOR	3.9kΩ,1/16W
R3501	NRSA63J-0R0X	MG RESISTOR	0Ω,1/16W

# ⚠ REF No.	PART No.	PART NAME, DESCRIPTION	
R3502	NRSA63J-102X	MG RESISTOR	1kΩ,1/16W
R3504	NRSA63J-102X	MG RESISTOR	1kΩ,1/16W
R3505	NRSA63J-102X	MG RESISTOR	1kΩ,1/16W
R3506	NRSA63J-102X	MG RESISTOR	1kΩ,1/16W
R3507	NRSA63J-0R0X	MG RESISTOR	0Ω,1/16W
R3508	NRSA63J-153X	MG RESISTOR	15kΩ,1/16W
R3901	NRSA63J-100X	MG RESISTOR	10Ω,1/16W
R3902	NRSA63J-101X	MG RESISTOR	100Ω,1/16W
R3903	NRSA63J-182X	MG RESISTOR	1.8kΩ,1/16W
R4001	NRSA63J-113X	MG RESISTOR	11kΩ,1/16W
R4002	NRSA63J-123X	MG RESISTOR	12kΩ,1/16W
R4003	NRSA63J-153X	MG RESISTOR	15kΩ,1/16W
R4004	NRSA63J-103X	MG RESISTOR	10kΩ,1/16W
R4006	NRVA63D-103X	CMF RESISTOR	10kΩ,1/16W
R4007	NRVA63D-432X	CMF RESISTOR	4.3kΩ,1/16W
R4008	NRVA63D-272X	CMF RESISTOR	2.7kΩ,1/16W
R4009	NRVA63D-152X	CMF RESISTOR	1.5kΩ,1/16W
R4010	NRVA63D-122X	CMF RESISTOR	1.2kΩ,1/16W
R4011	NRVA63D-152X	CMF RESISTOR	1.5kΩ,1/16W
R4012	NRVA63D-122X	CMF RESISTOR	1.2kΩ,1/16W
R4013	NRVA63D-152X	CMF RESISTOR	1.5kΩ,1/16W
R4014	NRVA63D-122X	CMF RESISTOR	1.2kΩ,1/16W
R4035	NRSA63J-0R0X	MG RESISTOR	0Ω,1/16W
R4037	NRSA63J-102X	MG RESISTOR	1kΩ,1/16W
R4038	NRSA63J-101X	MG RESISTOR,E,F	100Ω,1/16W
R4201	NRSA63J-103X	MG RESISTOR	10kΩ,1/16W
R4202	NRSA63J-563X	MG RESISTOR	56kΩ,1/16W
R4203	NRSA63J-103X	MG RESISTOR	10kΩ,1/16W
R4204	NRSA63J-331X	MG RESISTOR	330Ω,1/16W
R4205	NRSA63J-105X	MG RESISTOR	1MΩ,1/16W
R4206	NRSA63J-103X	MG RESISTOR	10kΩ,1/16W
R4207	NRSA63J-104X	MG RESISTOR	100kΩ,1/16W
R4208	NRSA63J-472X	MG RESISTOR	4.7kΩ,1/16W
R4209	NRSA63J-104X	MG RESISTOR	100kΩ,1/16W
R4210	NRSA63J-105X	MG RESISTOR	1MΩ,1/16W
R4211	NRSA63J-243X	MG RESISTOR	24kΩ,1/16W
R4214	NRSA63J-472X	MG RESISTOR	4.7kΩ,1/16W
R4215	NRSA63J-683X	MG RESISTOR	68kΩ,1/16W
R4216	NRSA63J-103X	MG RESISTOR	10kΩ,1/16W
R4217	NRSA63J-102X	MG RESISTOR	1kΩ,1/16W
R4218	NRSA63J-102X	MG RESISTOR	1kΩ,1/16W
R4219	NRSA63J-104X	MG RESISTOR	100kΩ,1/16W
R4220	NRSA63J-152X	MG RESISTOR	1.5kΩ,1/16W
R4221	NRSA63J-334X	MG RESISTOR	330kΩ,1/16W
R4222	NRSA63J-154X	MG RESISTOR	150kΩ,1/16W
R4223	NRSA63J-333X	MG RESISTOR	33kΩ,1/16W
R4224	NRSA63J-223X	MG RESISTOR	22kΩ,1/16W
R4251	NRSA63J-182X	MG RESISTOR	1.8kΩ,1/16W
R4252	NRSA63J-103X	MG RESISTOR	10kΩ,1/16W
R4253	NRSA63J-103X	MG RESISTOR	10kΩ,1/16W
R4254	NRSA63J-684X	MG RESISTOR	680kΩ,1/16W
R4255	NRSA63J-222X	MG RESISTOR	2.2kΩ,1/16W
R4256	NRSA63J-824X	MG RESISTOR	820kΩ,1/16W
R4257	NRSA63J-822X	MG RESISTOR	8.2kΩ,1/16W
R4258	NRSA63J-104X	MG RESISTOR	100kΩ,1/16W
R4259	NRSA63J-683X	MG RESISTOR	68kΩ,1/16W
R4262	NRSA63J-302X	MG RESISTOR	3kΩ,1/16W
⚠ R4501	NRSA63J-6R8X	MG RESISTOR	6.8Ω,1/16W
⚠ R4502	NRSA63J-6R8X	MG RESISTOR	6.8Ω,1/16W
⚠ R4503	NRSA63J-6R8X	MG RESISTOR	6.8Ω,1/16W
⚠ R4504	NRSA63J-6R8X	MG RESISTOR	6.8Ω,1/16W

# ⚠ REF No.	PART No.	PART NAME, DESCRIPTION	
R4505	NRSA63J-271X	MG RESISTOR	270Ω,1/16W
R4507	NRSA63J-103X	MG RESISTOR	10kΩ,1/16W
R4508	NRSA63J-103X	MG RESISTOR	10kΩ,1/16W
R4514	NRSA63J-223X	MG RESISTOR	22kΩ,1/16W
R4515	NRSA63J-182X	MG RESISTOR	1.8kΩ,1/16W
R4701	NRSA63J-0R0X	MG RESISTOR,A,B	0Ω,1/16W
R4702	NRSA63J-101X	MG RESISTOR,C,D,E,F	100Ω,1/16W
	NRSA63J-750X	MG RESISTOR ,A,B	75Ω,1/16W
R4703	NRVA63D-561X	CMF RESISTOR	560Ω,1/16W
R4704	NRVA63D-272X	CMF RESISTOR	2.7kΩ,1/16W
R4705	NRVA63D-472X	CMF RESISTOR	4.7kΩ,1/16W
R4706	NRSA63J-681X	MG RESISTOR	680Ω,1/16W
R4707	NRSA63J-122X	MG RESISTOR	1.2kΩ,1/16W
R4708	NRSA63J-104X	MG RESISTOR	100kΩ,1/16W
R4709	NRSA63J-332X	MG RESISTOR	3.3kΩ,1/16W
R4710	NRSA63J-332X	MG RESISTOR	3.3kΩ,1/16W
R4711	NRSA63J-151X	MG RESISTOR,C,D,E,F	150Ω,1/16W
R4712	NRVA63D-511X	CMF RESISTOR,C,D,E,F	510Ω,1/16W
R4713	NRSA63J-681X	MG RESISTOR,C,D,E,F	680Ω,1/16W
R4714	NRSA63J-122X	MG RESISTOR,C,D,E,F	1.2kΩ,1/16W
R4715	NRSA63J-0R0X	MG RESISTOR,C,D,E,F	0Ω,1/16W
R4716	NRVA63D-621X	CMF RESISTOR,C,D,E,F	620Ω,1/16W
R4717	NRVA63D-222X	CMF RESISTOR,C,D,E,F	2.2kΩ,1/16W
R4718	NRSA63J-104X	MG RESISTOR,C,D,E,F	100kΩ,1/16W
R4719	NRSA63J-222X	MG RESISTOR,C,D,E,F	2.2kΩ,1/16W
R4720	NRSA63J-0R0X	MG RESISTOR,A,B	0Ω,1/16W
R4721	NRVA63D-750X	CMF RESISTOR,C,D,E,F	75Ω,1/16W
R4722	NRVA63D-680X	CMF RESISTOR,C,D,E,F	68Ω,1/16W
	NRVA63D-750X	CMF RESISTOR,A,B	75Ω,1/16W
R4723	NRVA63D-680X	CMF RESISTOR,C,D,E,F	68Ω,1/16W
R4735	NRSA63J-332X	MG RESISTOR,C,D,E,F	3.3kΩ,1/16W
R4736	NRSA63J-332X	MG RESISTOR,C,D,E,F	3.3kΩ,1/16W
R4737	NRSA63J-104X	MG RESISTOR,C,D,E,F	100kΩ,1/16W
R4738	NRSA63J-332X	MG RESISTOR,C,D,E,F	3.3kΩ,1/16W
R4739	NRSA63J-332X	MG RESISTOR,C,D,E,F	3.3kΩ,1/16W
R4741	NRVA63D-152X	CMF RESISTOR,C,D,E,F	1.5kΩ,1/16W
R4743	NRVA63D-223X	CMF RESISTOR,C,D,E,F	22kΩ,1/16W
R4744	NRVA63D-222X	CMF RESISTOR,C,D,E,F	2.2kΩ,1/16W
R4745	NRSA63J-471X	MG RESISTOR,C,D,E,F	470Ω,1/16W
R4746	NRVA63D-222X	CMF RESISTOR,C,D,E,F	2.2kΩ,1/16W
R4747	NRVA63D-471X	CMF RESISTOR,C,D,E,F	470Ω,1/16W
R5201	NRSA63J-243X	MG RESISTOR	24kΩ,1/16W
R5202	NRSA63J-220X	MG RESISTOR	22Ω,1/16W
R5204	NRSA63J-0R0X	MG RESISTOR	0Ω,1/16W
R5212	NRSA63J-101X	MG RESISTOR	100Ω,1/16W
R5213	NRSA63J-101X	MG RESISTOR	100Ω,1/16W
R5214	NRSA63J-101X	MG RESISTOR	100Ω,1/16W
R5215	NRSA63J-104X	MG RESISTOR	100kΩ,1/16W
R5216	NRSA63J-100X	MG RESISTOR	10Ω,1/16W
R5217	NRSA63J-104X	MG RESISTOR,C,D,E,F	100kΩ,1/16W
R5218	NRSA63J-0R0X	MG RESISTOR	0Ω,1/16W
R5220	NRSA63J-0R0X	MG RESISTOR	0Ω,1/16W
R6001	NRSA63J-104X	MG RESISTOR	100kΩ,1/16W
R6002	NRSA63J-333X	MG RESISTOR	33kΩ,1/16W
R6003	NRVA63D-912X	CMF RESISTOR	9.1kΩ,1/16W
R6004	NRVA63D-471X	CMF RESISTOR	470Ω,1/16W
R6005	NRVA63D-183X	CMF RESISTOR	18kΩ,1/16W
R6006	NRSA63J-472X	MG RESISTOR	4.7kΩ,1/16W
R6008	NRVA63D-183X	CMF RESISTOR	18kΩ,1/16W
R6009	NRSA63J-224X	MG RESISTOR	220kΩ,1/16W
R6010	NRSA63J-473X	MG RESISTOR	47kΩ,1/16W
R6011	NRSA63J-473X	MG RESISTOR	47kΩ,1/16W
R6012	NRSA63J-103X	MG RESISTOR	10kΩ,1/16W
R6015	NRSA63J-104X	MG RESISTOR	100kΩ,1/16W
R6016	NRSA63J-104X	MG RESISTOR	100kΩ,1/16W
R6019	NRSA63J-222X	MG RESISTOR	2.2kΩ,1/16W
R6103	NRVA63D-223X	CMF RESISTOR	22kΩ,1/16W
R6104	NRVA63D-103X	CMF RESISTOR	10kΩ,1/16W
R6106	NRSA63J-333X	MG RESISTOR	33kΩ,1/16W
R6107	NRSA63J-222X	MG RESISTOR	2.2kΩ,1/16W
R6108	NRVA63D-153X	CMF RESISTOR	15kΩ,1/16W
R6109	NRVA63D-103X	CMF RESISTOR	10kΩ,1/16W
R6110	NRSA63J-0R0X	MG RESISTOR	0Ω,1/16W
R6203	NRVA63D-103X	CMF RESISTOR	10kΩ,1/16W
R6204	NRVA63D-103X	CMF RESISTOR	10kΩ,1/16W
R6303	NRVA63D-183X	CMF RESISTOR	18kΩ,1/16W
R6304	NRVA63D-472X	CMF RESISTOR	4.7kΩ,1/16W
R6306	NRS12BK-R47W	MG RESISTOR	0.47Ω,1/2W
R6307	NRSA63J-104X	MG RESISTOR	100kΩ,1/16W
R6309	NRSA63J-103X	MG RESISTOR	10kΩ,1/16W
R6310	NRSA63J-152X	MG RESISTOR	1.5kΩ,1/16W
R6311	NRSA63J-473X	MG RESISTOR	47kΩ,1/16W
R6403	NRSA63J-473X	MG RESISTOR	47kΩ,1/16W
R6404	NRSA63J-302X	MG RESISTOR	3kΩ,1/16W
R6406	NRSA63J-183X	MG RESISTOR	18kΩ,1/16W
R6407	NRSA63J-823X	MG RESISTOR	82kΩ,1/16W
R6503	NRSA63J-243X	MG RESISTOR	24kΩ,1/16W
R6504	NRSA63J-332X	MG RESISTOR	3.3kΩ,1/16W
R6506	NRSA63J-223X	MG RESISTOR	22kΩ,1/16W
R6507	NRSA63J-823X	MG RESISTOR	82kΩ,1/16W
R6603	NRVA63D-683X	CMF RESISTOR	68kΩ,1/16W
R6604	NRVA63D-392X	CMF RESISTOR	3.9kΩ,1/16W
R6605	NRSA63J-274X	MG RESISTOR	270kΩ,1/16W
R6606	NRSA63J-272X	MG RESISTOR	2.7kΩ,1/16W
R6612	NRSA63J-823X	MG RESISTOR	82kΩ,1/16W
R6613	NRSA63J-104X	MG RESISTOR	100kΩ,1/16W
R6614	NRSA63J-472X	MG RESISTOR	4.7kΩ,1/16W
R6616	NRSA63J-102X	MG RESISTOR	1kΩ,1/16W
R6622	NRVA63D-104X	CMF RESISTOR	100kΩ,1/16W
R6623	NRVA63D-473X	CMF RESISTOR	47kΩ,1/16W
R6624	NRSA63J-273X	MG RESISTOR	27kΩ,1/16W
R6625	NRSA63J-822X	MG RESISTOR	8.2kΩ,1/16W
R6626	NRVA63D-563X	CMF RESISTOR	56kΩ,1/16W
R6627	NRVA63D-363X	CMF RESISTOR	36kΩ,1/16W
R6701	NRSA63J-680X	MG RESISTOR	68Ω,1/16W
R6702	NRSA63J-221X	MG RESISTOR	220Ω,1/16W
R6704	NRVA63D-472X	CMF RESISTOR	4.7kΩ,1/16W
R6706	NRZ0058-R20X	MG RESISTOR	0.2Ω,1/2W
R6707	NRS016J-121X	MG RESISTOR	120Ω,1W
R6708	NRS016J-121X	MG RESISTOR	120Ω,1W
R6709	NRS016J-121X	MG RESISTOR	120Ω,1W
R6710	NRVA63D-823X	CMF RESISTOR	82kΩ,1/16W
R6711	NRVA63D-333X	CMF RESISTOR	33kΩ,1/16W
R6712	NRSA63J-222X	MG RESISTOR	2.2kΩ,1/16W
R6713	NRSA63J-562X	MG RESISTOR	5.6kΩ,1/16W
R6801	NRSA63J-102X	MG RESISTOR	1kΩ,1/16W
R6803	NRVA63D-223X	CMF RESISTOR	22kΩ,1/16W
R6804	NRVA63D-103X	CMF RESISTOR	10kΩ,1/16W
R6810	NRSA63J-0R0X	MG RESISTOR	0Ω,1/16W
R6811	NRSA63J-102X	MG RESISTOR	1kΩ,1/16W
R6813	NRVA63D-104X	CMF RESISTOR	100kΩ,1/16W
R6814	NRVA63D-683X	CMF RESISTOR	68kΩ,1/16W

# ⚠ REF No.	PART No.	PART NAME, DESCRIPTION	
R6820	NRSA63J-102X	MG RESISTOR	1kΩ,1/16W
R7002	NRSA63J-102X	MG RESISTOR,E,F	1kΩ,1/16W
R7003	NRSA63J-103X	MG RESISTOR,E,F	10kΩ,1/16W
R7004	NRSA63J-333X	MG RESISTOR,E,F	33kΩ,1/16W
R7005	NRSA63J-103X	MG RESISTOR,E,F	10kΩ,1/16W
R7007	NRVA63D-473X	CMF RESISTOR,E,F	47kΩ,1/16W
R7008	NRVA63D-913X	CMF RESISTOR,E,F	91kΩ,1/16W
R7009	NRSA63J-0R0X	MG RESISTOR,E,F	0Ω,1/16W
R7010	NRSA63J-0R0X	MG RESISTOR	0Ω,1/16W
R7014	NRSA63J-0R0X	MG RESISTOR,E,F	0Ω,1/16W
R7021	NRSA63J-0R0X	MG RESISTOR,E,F	0Ω,1/16W
R7029	NRSA63J-0R0X	MG RESISTOR,E,F	0Ω,1/16W
R7031	NRSA63J-474X	MG RESISTOR	470kΩ,1/16W
R7032	NRSA63J-223X	MG RESISTOR	22kΩ,1/16W
R7033	NRSA63J-104X	MG RESISTOR	100kΩ,1/16W
R7035	NRSA63J-103X	MG RESISTOR	10kΩ,1/16W
R7040	NRVA63D-333X	CMF RESISTOR	33kΩ,1/16W
R7042	NRVA63D-123X	CMF RESISTOR	12kΩ,1/16W
R7043	NRVA63D-123X	CMF RESISTOR	12kΩ,1/16W
R7044	NRVA63D-432X	CMF RESISTOR,E,F	4.3kΩ,1/16W
	NRVA63D-752X	CMF RESISTOR,A,B,C,D	7.5kΩ,1/16W
R7045	NRVA63D-103X	CMF RESISTOR	10kΩ,1/16W
R7046	NRSA63J-103X	MG RESISTOR,A,B,C,D	10kΩ,1/16W
R7049	NRSA63J-680X	MG RESISTOR	68Ω,1/16W
R7050	NRSA63J-680X	MG RESISTOR	68Ω,1/16W
R7051	NRSA63J-680X	MG RESISTOR	68Ω,1/16W
R7058	NRSA63J-0R0X	MG RESISTOR	0Ω,1/16W
R7061	NRVA63D-183X	CMF RESISTOR,E,F	18kΩ,1/16W
R7062	NRVA63D-334X	CMF RESISTOR,E,F	330kΩ,1/16W
R7067	NRSA63J-223X	MG RESISTOR,A,B,C,D	22kΩ,1/16W
	NRSA63J-682X	MG RESISTOR,E,F	6.8kΩ,1/16W
R7068	NRSA63J-223X	MG RESISTOR	22kΩ,1/16W
R7069	NRSA63J-223X	MG RESISTOR	22kΩ,1/16W
R7070	NRSA63J-223X	MG RESISTOR	22kΩ,1/16W
R7071	NRSA63J-223X	MG RESISTOR	22kΩ,1/16W
R7072	NRSA02J-122X	MG RESISTOR,E,F	1.2kΩ,1/10W
	NRSA02J-182X	MG RESISTOR,A,B,C,D	1.8kΩ,1/10W
R7073	NRSA02J-331X	MG RESISTOR,A,B,C,D	330Ω,1/10W
	NRSA02J-821X	MG RESISTOR,E,F	820Ω,1/10W
R7074	NRSA63J-103X	MG RESISTOR	10kΩ,1/16W
R7077	NRVA63D-682X	CMF RESISTOR	6.8kΩ,1/16W
R7078	NRVA63D-822X	CMF RESISTOR,E,F	8.2kΩ,1/16W
R7079	NRSA63J-0R0X	MG RESISTOR,E,F	0Ω,1/16W
R7083	NRSA63J-105X	MG RESISTOR	1MΩ,1/16W
R7085	NRVA63D-822X	CMF RESISTOR,E,F	8.2kΩ,1/16W
R7086	NRVA63D-123X	CMF RESISTOR	12kΩ,1/16W
R7088	NRVA63D-223X	CMF RESISTOR,E,F	22kΩ,1/16W
R7090	NRVA63D-822X	CMF RESISTOR,E,F	8.2kΩ,1/16W
R7091	NRVA63D-123X	CMF RESISTOR	12kΩ,1/16W
R7093	NRVA63D-223X	CMF RESISTOR	22kΩ,1/16W
R7095	NRVA63D-822X	CMF RESISTOR,E,F	8.2kΩ,1/16W
R7096	NRVA63D-123X	CMF RESISTOR	12kΩ,1/16W
R7098	NRVA63D-223X	CMF RESISTOR,E,F	22kΩ,1/16W
R7099	NRVA63D-103X	CMF RESISTOR,E,F	10kΩ,1/16W
R7100	NRVA63D-103X	CMF RESISTOR,E,F	10kΩ,1/16W
R7101	NRVA63D-103X	CMF RESISTOR,E,F	10kΩ,1/16W
R7102	NRVA63D-103X	CMF RESISTOR,E,F	10kΩ,1/16W
R7103	NRVA63D-103X	CMF RESISTOR,E,F	10kΩ,1/16W
R7110	NRSA63J-105X	MG RESISTOR	1MΩ,1/16W
R7112	NRVA63D-332X	CMF RESISTOR	3.3kΩ,1/16W
R7114	NRVA63D-223X	CMF RESISTOR	22kΩ,1/16W

# ⚠ REF No.	PART No.	PART NAME, DESCRIPTION	
R7116	NRVA63D-332X	CMF RESISTOR	3.3kΩ,1/16W
R7118	NRVA63D-223X	CMF RESISTOR	22kΩ,1/16W
R7120	NRVA63D-332X	CMF RESISTOR	3.3kΩ,1/16W
R7122	NRVA63D-223X	CMF RESISTOR	22kΩ,1/16W
R7124	NRVA63D-103X	CMF RESISTOR	10kΩ,1/16W
R7127	NRVA63D-103X	CMF RESISTOR,E,F	10kΩ,1/16W
R7128	NRVA63D-103X	CMF RESISTOR	10kΩ,1/16W
R7129	NRVA63D-103X	CMF RESISTOR	10kΩ,1/16W
R7130	NRVA63D-103X	CMF RESISTOR	10kΩ,1/16W
R7131	NRVA63D-103X	CMF RESISTOR	10kΩ,1/16W
R7132	NRVA63D-103X	CMF RESISTOR	10kΩ,1/16W
R7139	NRVA63D-911X	CMF RESISTOR,A,B,C,D	910Ω,1/16W
R7142	NRSA63J-0R0X	MG RESISTOR,E,F	0Ω,1/16W
R7143	NRSA63J-0R0X	MG RESISTOR,A,B,C,D	0Ω,1/16W
RA101	NRZ0038-222X	NET RESISTOR	2.2kΩ
RA102	NRZ0038-222X	NET RESISTOR	2.2kΩ
RA103	NRZ0038-222X	NET RESISTOR	2.2kΩ
RA104	NRZ0038-222X	NET RESISTOR	2.2kΩ
RA105	NRZ0038-473X	NET RESISTOR	47kΩ
RA106	NRZ0037-331X	NET RESISTOR	330Ω
RA107	NRZ0034-102W	NET RESISTOR	1kΩ
RA108	NRZ0034-102W	NET RESISTOR	1kΩ
RA109	NRZ0038-474X	NET RESISTOR	47kΩ
RA4001	NRZ0034-100W	NET RESISTOR,E,F	10Ω
RA4002	NRZ0034-100W	NET RESISTOR,E,F	10Ω
RA4003	NRZ0034-100W	NET RESISTOR,E,F	10Ω
C102	NCF31EZ-104X	CAPACITOR	0.1μF,25V
C103	NBE41AM-106X	T CAPACITOR	10μF,10V
C104	NCB31EK-103X	CAPACITOR	0.01μF,25V
C105	NCB31CK-104X	CAPACITOR	0.1μF,16V
C106	NCF31EZ-104X	CAPACITOR	0.1μF,25V
C107	NCB31EK-103X	CAPACITOR	0.01μF,25V
C108	NBE21AM-225X	T CAPACITOR	2.2μF,10V
C109	NBE41AM-106X	T CAPACITOR	10μF,10V
C110	NDC31HJ-101X	CAPACITOR	100pF,50V
C111	NEA70JM-226X	E CAPACITOR	22μF,6.3V
C112	NEA70JM-226X	E CAPACITOR	22μF,6.3V
C113	NCB31EK-103X	CAPACITOR	0.01μF,25V
C114	NCB31EK-103X	CAPACITOR	0.01μF,25V
C115	NCF31EZ-104X	CAPACITOR	0.1μF,25V
C116	NCB31EK-103X	CAPACITOR	0.01μF,25V
C118	NCF31EZ-104X	CAPACITOR	0.1μF,25V
C119	NCB31EK-103X	CAPACITOR	0.01μF,25V
C120	NCB31EK-103X	CAPACITOR	0.01μF,25V
C121	NCF31EZ-104X	CAPACITOR	0.1μF,25V
C122	NCF31EZ-104X	CAPACITOR	0.1μF,25V
C123	NDC31HJ-100X	CAPACITOR	10pF,50V
C124	NDC31HJ-100X	CAPACITOR	10pF,50V
C125	NCB31EK-103X	CAPACITOR	0.01μF,25V
C126	NDC31HJ-120X	CAPACITOR	12pF,50V
C127	NCB31CK-333X	CAPACITOR	0.033μF,16V
C128	NCB21CK-474X	CAPACITOR	0.47μF,16V
C129	NCB31CK-333X	CAPACITOR	0.033μF,16V
C131	NCF31EZ-104X	CAPACITOR	0.1μF,25V
C132	NCF31EZ-104X	CAPACITOR	0.1μF,25V
C133	NCF31EZ-104X	CAPACITOR	0.1μF,25V
C134	NCF31EZ-104X	CAPACITOR	0.1μF,25V
C1201	NCB31HK-102X	CAPACITOR	0.001μF,50V
C1202	NBE20JM-106X	T CAPACITOR	10μF,6.3V
C1205	NCB31EK-153X	CAPACITOR	0.015μF,25V
C1206	NBE20JM-106X	T CAPACITOR	10μF,6.3V

# ⚠ REF No.	PART No.	PART NAME, DESCRIPTION	
C1601	NCB31EK-103X	CAPACITOR	0.01µF,25V
C1602	NCB21CK-224X	CAPACITOR	0.22µF,16V
C1603	NCB31CK-223X	CAPACITOR	0.022µF,16V
C1604	NCB31CK-223X	CAPACITOR	0.022µF,16V
C1605	NCB31CK-223X	CAPACITOR	0.022µF,16V
C1606	NCB31CK-104X	CAPACITOR	0.1µF,16V
C1607	NCB31CK-104X	CAPACITOR	0.1µF,16V
C1608	NCB31CK-683X	CAPACITOR	0.068µF,16V
C1609	NCB31CK-104X	CAPACITOR	0.1µF,16V
C1610	NCB31CK-104X	CAPACITOR	0.1µF,16V
C1611	NCB31CK-104X	CAPACITOR	0.1µF,16V
C1612	NDC31HJ-331X	CAPACITOR	330pF,50V
C1613	NCB21CK-334X	CAPACITOR	0.33µF,16V
C1614	NBE41AM-226X	T CAPACITOR	22µF,10V
C1615	NCB31HK-681X	CAPACITOR	680pF,50V
C1616	NCB21CK-474X	CAPACITOR	0.47µF,16V
C1617	NCB31HK-152X	CAPACITOR	0.0015µF,50V
C1618	NBE21AM-106X	T CAPACITOR	10µF,10V
C1619	NCB31CK-223X	CAPACITOR	0.022µF,16V
C1621	NBP41CM-106X	T CAPACITOR	10µF,16V
C2001	NBE20JM-106X	T CAPACITOR	10µF,6.3V
C2002	NFV41HJ-183X	MPPS CAPACITOR	0.018µF,50V
C2003	NDC31HJ-331X	CAPACITOR	330pF,50V
C2004	NBE20JM-226X	T CAPACITOR	22µF,6.3V
C2005	NCB21CK-105X	CAPACITOR	1µF,16V
C2021	NCB31EK-682X	CAPACITOR	0.0068µF,25V
C2022	NBE20JM-106X	T CAPACITOR	10µF,6.3V
C2023	NBP21CM-105X	T CAPACITOR	1µF,16V
C2024	NCB31HK-122X	CAPACITOR	0.0012µF,50V
C2025	NCB30JK-105X	CAPACITOR	1µF,6.3V
C2026	NCB31HK-222X	CAPACITOR	0.0022µF,50V
C2027	NCB30JK-474X	CAPACITOR	0.47µF,6.3V
C2028	NCB30JK-105X	CAPACITOR	1µF,6.3V
C2029	NCB30JK-105X	CAPACITOR	1µF,6.3V
C2031	NCB31CK-104X	CAPACITOR	0.1µF,16V
C2032	NCB31HK-472X	CAPACITOR	0.0047µF,50V
C2033	NBE20JM-475X	T CAPACITOR	4.7µF,6.3V
C2034	NCB31CK-104X	CAPACITOR	0.1µF,16V
C2035	NBE20JM-226X	T CAPACITOR	22µF,6.3V
C2036	NBE20JM-106X	T CAPACITOR	10µF,6.3V
C2037	NBE20JM-226X	T CAPACITOR	22µF,6.3V
C2038	NCB30JK-474X	CAPACITOR	0.47µF,6.3V
C2051	NCB31EK-103X	CAPACITOR	0.01µF,25V
C2071	NBE20JM-106X	T CAPACITOR	10µF,6.3V
C2072	NCB31HK-222X	CAPACITOR	0.0022µF,50V
C2401	NEA70GM-476X	E CAPACITOR	47µF,4.0V
C2402	NBE20JM-106X	T CAPACITOR	10µF,6.3V
C2403	NCB31EK-103X	CAPACITOR	0.01µF,25V
C2404	NCF31CZ-224X	CAPACITOR	0.22µF,16V
C2405	NCB31CK-104X	CAPACITOR	0.1µF,16V
C2406	NCF31EZ-104X	CAPACITOR	0.1µF,25V
C3002	NCB21CK-105X	CAPACITOR	1µF,16V
C3003	NCB21CK-105X	CAPACITOR	1µF,16V
C3004	NCF31EZ-104X	CAPACITOR	0.1µF,25V
C3005	NCF31EZ-104X	CAPACITOR	0.1µF,25V
C3006	NDC31HG-100X	CAPACITOR	10pF,50V
C3007	NDC31HG-100X	CAPACITOR	10pF,50V
C3009	NCF31EZ-104X	CAPACITOR	0.1µF,25V
C3011	NCF31EZ-104X	CAPACITOR	0.1µF,25V
C3012	NCF31EZ-104X	CAPACITOR	0.1µF,25V
C3013	NCF31EZ-104X	CAPACITOR	0.1µF,25V

# ⚠ REF No.	PART No.	PART NAME, DESCRIPTION	
C3014	NCF31EZ-104X	CAPACITOR	0.1µF,25V
C3015	NCF31EZ-104X	CAPACITOR	0.1µF,25V
C3017	NCF31EZ-104X	CAPACITOR	0.1µF,25V
C3019	NCB31EK-103X	CAPACITOR	0.01µF,25V
C3020	NCB31EK-103X	CAPACITOR	0.01µF,25V
C3027	NCB31EK-103X	CAPACITOR	0.01µF,25V
C3028	NCB31EK-103X	CAPACITOR	0.01µF,25V
C3033	NCB31CK-104X	CAPACITOR,C,D,E,F	0.1µF,16V
C3037	NDC31HJ-100X	CAPACITOR	10pF,50V
C3506	NCB31EK-103X	CAPACITOR	0.01µF,25V
C3507	NCB31EK-103X	CAPACITOR	0.01µF,25V
C3508	NCB31EK-103X	CAPACITOR	0.01µF,25V
C3510	NCB31CK-104X	CAPACITOR	0.1µF,16V
C3512	NCB10JK-106X	CAPACITOR	10µF,6.3V
C3513	NCB31CK-223X	CAPACITOR	0.022µF,16V
C3514	NCB21CK-105X	CAPACITOR	1µF,16V
C3515	NCB31EK-103X	CAPACITOR	0.01µF,25V
C3902	NCB31EK-103X	CAPACITOR	0.01µF,25V
C3903	NDC31HJ-3R0X	CAPACITOR	3pF,50V
C4006	NCF31EZ-104X	CAPACITOR	0.1µF,25V
C4008	NCF31EZ-104X	CAPACITOR	0.1µF,25V
C4009	NCF31EZ-104X	CAPACITOR	0.1µF,25V
C4010	NCF31EZ-104X	CAPACITOR	0.1µF,25V
C4012	NCF31EZ-104X	CAPACITOR	0.1µF,25V
C4014	NCF31EZ-104X	CAPACITOR	0.1µF,25V
C4017	NCF31EZ-104X	CAPACITOR	0.1µF,25V
C4019	NCF31EZ-104X	CAPACITOR	0.1µF,25V
C4022	NCF31EZ-104X	CAPACITOR	0.1µF,25V
C4024	NCF31EZ-104X	CAPACITOR	0.1µF,25V
C4028	NCF31EZ-104X	CAPACITOR	0.1µF,25V
C4029	NCF31EZ-104X	CAPACITOR	0.1µF,25V
C4030	NCF31EZ-104X	CAPACITOR	0.1µF,25V
C4036	NCF31EZ-104X	CAPACITOR	0.1µF,25V
C4040	NCB21CK-105X	CAPACITOR,C,D,E,F	1µF,16V
C4044	NCB21CK-105X	CAPACITOR	1µF,16V
C4048	NCB10JK-106X	CAPACITOR	10µF,6.3V
C4049	NDC31HJ-100X	CAPACITOR	10pF,50V
C4051	NDC31HJ-221X	CAPACITOR	220pF,50V
C4201	NEA71HM-225X	E CAPACITOR	2.2µF,50V
C4202	NCF31EZ-104X	CAPACITOR	0.1µF,25V
C4203	NCB31CK-104X	CAPACITOR	0.1µF,16V
C4205	NCB31EK-103X	CAPACITOR	0.01µF,25V
C4206	NCB31CK-104X	CAPACITOR	0.1µF,16V
C4207	NCB31EK-103X	CAPACITOR	0.01µF,25V
C4208	NCB31CK-104X	CAPACITOR	0.1µF,16V
C4209	NCF21CZ-105X	CAPACITOR	1µF,16V
C4210	NCF21CZ-105X	CAPACITOR	1µF,16V
C4251	NEA71HM-335X	E CAPACITOR	3.3µF,50V
C4252	NCB31CK-104X	CAPACITOR	0.1µF,16V
C4253	NCB31EK-153X	CAPACITOR	0.015µF,25V
C4254	NCB31EK-153X	CAPACITOR	0.015µF,25V
C4256	NEA71CM-106X	E CAPACITOR	10µF,16V
C4503	NEA70JM-107X	E CAPACITOR	100µF,6.3V
C4504	NCF31EZ-104X	CAPACITOR	0.1µF,25V
C4505	NDC31HJ-330X	CAPACITOR	33pF,50V
C4506	NCB31HK-102X	CAPACITOR	0.001µF,50V
C4507	NCB31HK-102X	CAPACITOR	0.001µF,50V
C4508	NCB31HK-102X	CAPACITOR	0.001µF,50V
C4509	NCB31HK-102X	CAPACITOR	0.001µF,50V
C4510	NCB31CK-104X	CAPACITOR	0.1µF,16V
C4511	NCF31EZ-104X	CAPACITOR	0.1µF,25V

# ⚠ REF No.	PART No.	PART NAME, DESCRIPTION	
C4701	NBE20JM-106X	T CAPACITOR	10µF,6.3V
C4702	NCF31EZ-104X	CAPACITOR	0.1µF,25V
C4703	NBE20JM-106X	T CAPACITOR	10µF,6.3V
C4704	NCB21CK-105X	CAPACITOR	1µF,16V
C4705	NDC31HJ-820X	CAPACITOR	82pF,50V
C4706	NDC31HJ-150X	CAPACITOR	15pF,50V
C4707	NCB21CK-105X	CAPACITOR	1µF,16V
C4708	NDC31HJ-820X	CAPACITOR,C,D,E,F	82pF,50V
C4709	NDC31HJ-150X	CAPACITOR,C,D,E,F	15pF,50V
C4710	NCB31EK-103X	CAPACITOR,C,D,E,F	0.01µF,25V
C4711	NCB21CK-105X	CAPACITOR,C,D,E,F	1µF,16V
C4715	NCB21CK-105X	CAPACITOR,C,D,E,F	1µF,16V
C4719	NCB31EK-103X	CAPACITOR,C,D,E,F	0.01µF,25V
C5203	NCB10JK-106X	CAPACITOR	10µF,6.3V
C5207	NCB31EK-103X	CAPACITOR	0.01µF,25V
C5208	NCB31EK-103X	CAPACITOR	0.01µF,25V
C5209	NCB31EK-103X	CAPACITOR	0.01µF,25V
C5210	NCF31EZ-104X	CAPACITOR	0.1µF,25V
C5211	NCB21CK-105X	CAPACITOR	1µF,16V
C5212	NCB21CK-105X	CAPACITOR	1µF,16V
C5213	NCB31HK-332X	CAPACITOR	0.0033µF,50V
C5214	NCB31EK-103X	CAPACITOR	0.01µF,25V
C5218	NCF31EZ-104X	CAPACITOR	0.1µF,25V
C5219	NBP21CM-685X	T CAPACITOR	6.8µF,16V
C5221	NCB11EK-105X	CAPACITOR	1µF,25V
C5222	NCB31CK-104X	CAPACITOR	0.1µF,16V
C5223	NCF31EZ-104X	CAPACITOR	0.1µF,25V
C5225	NCF31EZ-104X	CAPACITOR	0.1µF,25V
C5227	NCB31CK-104X	CAPACITOR	0.1µF,16V
C5228	NCF31EZ-104X	CAPACITOR	0.1µF,25V
C5229	NCB11EK-105X	CAPACITOR,C,D,E,F	1µF,25V
	NRS181J-0R0X	MG RESISTOR,A,B	0Ω,1/8W
C5230	NCB21EK-104X	CAPACITOR	0.1µF,25V
C5232	NDC31HJ-100X	CAPACITOR	10pF,50V
C5233	NDC31HJ-100X	CAPACITOR	10pF,50V
C5234	NDC31HJ-100X	CAPACITOR	10pF,50V
C5235	NDC31HJ-100X	CAPACITOR	10pF,50V
C5236	NDC31HJ-100X	CAPACITOR	10pF,50V
C5237	NDC31HJ-100X	CAPACITOR	10pF,50V
C6002	NEA71CM-106X	E CAPACITOR	10µF,16V
C6004	NCF21CZ-105X	CAPACITOR	1µF,16V
C6005	NCB21CK-105X	CAPACITOR	1µF,16V
C6006	NCF21CZ-105X	CAPACITOR	1µF,16V
C6007	NCB21CK-105X	CAPACITOR	1µF,16V
C6009	NDC31HJ-820X	CAPACITOR	82pF,50V
C6010	NCB21CK-105X	CAPACITOR	1µF,16V
C6011	NCB21CK-104X	CAPACITOR	0.1µF,16V
C6012	NCB21CK-224X	CAPACITOR	0.22µF,16V
C6013	NCB31EK-473X	CAPACITOR	0.047µF,25V
C6014	NCB31EK-473X	CAPACITOR	0.047µF,25V
C6015	NCB31EK-473X	CAPACITOR	0.047µF,25V
C6016	NCB31EK-473X	CAPACITOR	0.047µF,25V
C6017	NCF21CZ-105X	CAPACITOR	1µF,16V
C6101	NCB21CK-105X	CAPACITOR	1µF,16V
C6102	NCB10JK-106X	CAPACITOR	10µF,6.3V
C6105	NCB31HK-102X	CAPACITOR	0.001µF,50V
C6106	NCF21CZ-105X	CAPACITOR	1µF,16V
C6107	NCF21CZ-105X	CAPACITOR	1µF,16V
C6108	NCF21CZ-105X	CAPACITOR	1µF,16V
C6110	NCB31HK-152X	CAPACITOR	0.0015µF,50V
C6201	NCB21CK-105X	CAPACITOR	1µF,16V

# ⚠ REF No.	PART No.	PART NAME, DESCRIPTION	
C6202	NCB10JK-106X	CAPACITOR	10µF,6.3V
C6203	NEA70JM-476X	E CAPACITOR	47µF,6.3V
C6205	NCB31HK-472X	CAPACITOR	0.0047µF,50V
C6210	NCB31EK-103X	CAPACITOR	0.01µF,25V
C6301	NCB11CK-225X	CAPACITOR	2.2µF,16V
C6302	NCB10JK-106X	CAPACITOR	10µF,6.3V
C6303	NEA70JM-226X	E CAPACITOR	22µF,6.3V
C6305	NCB31HK-561X	CAPACITOR	560pF,50V
C6306	NCB21CK-105X	CAPACITOR	1µF,16V
C6307	NEA71CM-106X	E CAPACITOR	10µF,16V
C6308	NBE20JM-106X	T CAPACITOR	10µF,6.3V
C6310	NCB31HK-102X	CAPACITOR	0.001µF,50V
C6401	NCB21CK-105X	CAPACITOR	1µF,16V
C6402	NCF21CZ-105X	CAPACITOR	1µF,16V
C6406	NCB31CK-683X	CAPACITOR	0.068µF,16V
C6410	NCB21CK-474X	CAPACITOR	0.47µF,16V
C6501	NCB21CK-105X	CAPACITOR	1µF,16V
C6502	NCF21CZ-105X	CAPACITOR	1µF,16V
C6506	NCB21CK-224X	CAPACITOR	0.22µF,16V
C6510	NCB31CK-104X	CAPACITOR	0.1µF,16V
C6601	NCB11CK-225X	CAPACITOR	2.2µF,16V
C6602	NCF21CZ-105X	CAPACITOR	1µF,16V
C6603	NCB11CK-475X	CAPACITOR	4.7µF,16V
C6605	NDC31HJ-331X	CAPACITOR	330pF,50V
C6606	NCF21CZ-105X	CAPACITOR	1µF,16V
C6607	NCB11EK-105X	CAPACITOR	1µF,25V
C6610	NCB31EK-103X	CAPACITOR	0.01µF,25V
C6616	NCB21CK-105X	CAPACITOR	1µF,16V
C6622	NCB21CK-105X	CAPACITOR	1µF,16V
C6700	NCB31HK-272X	CAPACITOR	0.0027µF,50V
C6701	NCF21CZ-105X	CAPACITOR	1µF,16V
C6702	NCB41CK-106X	CAPACITOR	10µF,16V
C6711	NCB21HK-472X	CAPACITOR	0.0047µF,50V
C6802	NCF21CZ-105X	CAPACITOR	1µF,16V
C6805	NCB31HK-102X	CAPACITOR	0.001µF,50V
C6810	NCB31EK-103X	CAPACITOR	0.01µF,25V
C6812	NCF21CZ-105X	CAPACITOR	1µF,16V
C6820	NCB31HK-102X	CAPACITOR	0.001µF,50V
C7001	NCB31EK-103X	CAPACITOR	0.01µF,25V
C7002	NBE20JM-106X	T CAPACITOR	10µF,6.3V
C7003	NBE20JM-335X	T CAPACITOR	3.3µF,6.3V
C7004	NCB31HK-332X	CAPACITOR,E,F	0.0033µF,50V
C7005	NCB31EK-103X	CAPACITOR,E,F	0.01µF,25V
C7006	NDC31HJ-390X	CAPACITOR,E,F	39pF,50V
C7007	NCB31HK-102X	CAPACITOR,E,F	0.001µF,50V
C7008	NCB31EK-103X	CAPACITOR,E,F	0.01µF,25V
C7012	NCB31CK-104X	CAPACITOR,E,F	0.1µF,16V
C7019	NDC31HJ-121X	CAPACITOR	120pF,50V
C7020	NDC31HJ-151X	CAPACITOR	150pF,50V
C7021	NBP41EM-475X	T CAPACITOR	4.7µF,25V
C7022	NCB31EK-103X	CAPACITOR	0.01µF,25V
C7023	NCB31EK-103X	CAPACITOR	0.01µF,25V
C7024	NBP41EM-475X	T CAPACITOR	4.7µF,25V
C7025	NCB31EK-103X	CAPACITOR	0.01µF,25V
C7026	NBE20JM-106X	T CAPACITOR	10µF,6.3V
C7028	NCB31EK-103X	CAPACITOR	0.01µF,25V
C7029	NCB31CK-104X	CAPACITOR,A,B,C,D	0.1µF,16V
C7030	NCB31EK-103X	CAPACITOR	0.01µF,25V
C7031	NDC31HJ-220X	CAPACITOR	22pF,50V
C7032	NCB31CK-104X	CAPACITOR	0.1µF,16V
C7033	NCB21CK-334X	CAPACITOR	0.33µF,16V

# ⚠ REF No.	PART No.	PART NAME, DESCRIPTION	
	C7034	NDC31HJ-331X	CAPACITOR	330pF,50V
	C7035	NDC31HJ-330X	CAPACITOR	33pF,50V
	C7036	NCB31CK-104X	CAPACITOR	0.1µF,16V
	C7037	NDC31HJ-330X	CAPACITOR	33pF,50V
	C7038	NCB31EK-103X	CAPACITOR	0.01µF,25V
	C7039	NBP41CM-106X	T CAPACITOR	10µF,16V
	C7042	NCB31EK-103X	CAPACITOR	0.01µF,25V
	C7045	NDC31HJ-100X	CAPACITOR,A,B,C,D	10pF,50V
	C7046	NDC31HJ-100X	CAPACITOR,A,B,C,D	10pF,50V
	C7047	NDC31HJ-100X	CAPACITOR,A,B,C,D	10pF,50V
	C7048	NBE20JM-106X	T CAPACITOR	10µF,6.3V
	C7051	NCB31EK-103X	CAPACITOR	0.01µF,25V
	C7052	NBE20JM-106X	T CAPACITOR	10µF,6.3V
	C7053	NCB31EK-103X	CAPACITOR	0.01µF,25V
	C7054	NBP41EM-475X	T CAPACITOR	4.7µF,25V
	C7056	NCB21CK-104X	CAPACITOR,E,F	0.1µF,16V
	C7057	NCB31EK-682X	CAPACITOR,A,B,C,D	0.0068µF,25V
	C7058	NCB31CK-104X	CAPACITOR,E,F	0.1µF,16V
	C7059	NBP41EM-475X	T CAPACITOR	4.7µF,25V
	C7060	NCB11CK-225X	CAPACITOR	2.2µF,16V
	C7061	NCB11CK-475X	CAPACITOR,E,F	4.7µF,16V
	C7062	NCB11CK-475X	CAPACITOR,E,F	4.7µF,16V
	C7063	NCB11CK-475X	CAPACITOR,E,F	4.7µF,16V
	C7064	NCB11EK-105X	CAPACITOR	1µF,25V
	C7065	NCB11EK-105X	CAPACITOR	1µF,25V
	C7066	NCB11EK-105X	CAPACITOR	1µF,25V
	C7067	NCB31CK-104X	CAPACITOR	0.1µF,16V
	C7069	NCB31EK-103X	CAPACITOR	0.01µF,25V
	L101	NQL034K-330X	COIL	33µH
	L1601	NQL38DK-100X	COIL	10µH
	L1602	NQL144K-100X	COIL	10µH
	L2001	NQL144K-101X	COIL	100µH
	L2003	NQL034K-470X	COIL	47µH
	L2021	NQL144K-470X	COIL	47µH
	L2051	NRSA63J-0R0X	MG RESISTOR	0Ω,1/16W
	L2052	NRSA63J-0R0X	MG RESISTOR	0Ω,1/16W
	L2071	NRSA63J-0R0X	MG RESISTOR	0Ω,1/16W
	L2072	NRSA63J-0R0X	MG RESISTOR	0Ω,1/16W
	L2401	NQL144K-470X	COIL	47µH
	L3002	NQR0006-001X	FERRITE BEAD	
	L3003	NQR0129-002X	FERRITE BEAD	
	L3502	NQL38DK-220X	COIL	22µH
	L4005	NQL38DK-220X	COIL	22µH
	L4201	NQR0006-001X	FERRITE BEAD	
	L4501	NQR0006-001X	FERRITE BEAD	
	L4502	NQL034K-220X	COIL	22µH
	L4701	NQL38DK-220X	COIL	22µH
	L5201	NQL38DK-470X	COIL	47µH
	L5202	NQL38DK-220X	COIL	22µH
	L5203	NQL38DK-220X	COIL	22µH
	L6001	NQL52EM-100X	COIL	10µH
	L6002	NQL52EM-100X	COIL	10µH
	L6101	NQL52EM-390X	COIL	39µH
	L6106	NQL144K-101X	COIL	100µH
	L6107	NQL144K-101X	COIL	100µH
	L6201	NQL52EM-470X	COIL	47µH
	L6301	NQL52EM-390X	COIL	39µH
	L6306	NQL52EM-470X	COIL	47µH
	L6401	NQL52EM-470X	COIL	47µH
	L6501	NQL52EM-470X	COIL	47µH
	L6601	NQL52EM-221X	COIL	220µH
	L6602	NQL144K-221X	COIL	220µH
	L6606	NQL144K-220X	COIL	22µH
	L6701	NQL52EM-100X	COIL	10µH
	L7001	NQL38DK-220X	COIL	22µH
	L7002	NQL085J-8R2X	COIL,E,F	8.2µH
	L7005	NQL38DK-220X	COIL	22µH
	L7006	NQL38DK-220X	COIL	22µH
	L7007	NQL38DK-220X	COIL	22µH
	L7008	NQL38DK-220X	COIL	22µH
	L7009	NQL38DK-220X	COIL	22µH
	L7012	NQL144K-100X	COIL,A,B,C,D	10µH
	X101	NAX0251-001X	CRYSTAL RESONATOR	
	X102	NAX0325-001X	CRYSTAL RESONATOR	
	X3001	QAX0565-001	CRYSTAL RESONATOR	
	WR1	WJV0039-001A	E-PRIMARY WIRE,JUMP WIRE	
	WR2	WJM0180-001A	E-SI C WIRE C-F,JP4001/JP4002,E,F	
	WR3	YU40017-013-1	THIN WIRE,JP2005-SD1,E,F	
⚠	J101	QAB0022-001	LI BATTERY	
	J504	LY31356-002A	JACK UNIT	
	J505	QND0068-001	S JACK,C,D,E,F	
	CN1	QGF0507F3-10X	FFC/FPC CONNECTOR	
	CN2	QGF0507F3-14X	FFC/FPC CONNECTOR	
	CN3	QGF0505F2-18X	FPC CONNECTOR	
	CN4	QGA1201F2-06X	CONNECTOR	
	CN5	QGF0507F1-11X	FPC CONNECTOR	
	CN7	QGF0507F3-11X	FFC/FPC CONNECTOR	
	CN8	QGA1201C2-02X	CONNECTOR	
	CN11	QGF0507F1-20X	FPC CONNECTOR,E,F	
	CN12	QGA1201F2-05X	CONNECTOR,A,B,C,D	
	CN13	QGF0507F3-14X	FFC/FPC CONNECTOR	
	CN15	QGF0507F1-22X	FPC CONNECTOR	
	CN16	QGF0305F1-33X	FPC CONNECTOR	
	CN18	QGF0507F3-12X	FFC/FPC CONNECTOR	
	CN19	QGF0301F1-39X	FPC CONNECTOR,E,F	
	CN22	QGF0507F3-14X	FFC/FPC CONNECTOR	
	CN25	QGB0506L1-30X	CONNECTOR	
	CN27	QGA1201C2-02X	CONNECTOR	
	CN28	QGA1002F1-13X	CONNECTOR	
⚠	F6001	NMFZ007-2R0X-K	FUSE	T2.0A
⚠	F6002	NMFZ010-R50X-A	FUSE	T0.5A
	SD1	LY42845-001A	SHIELD SHEET,E,F	
	OT1	LY30016-049A	SPACER-A,FOR WR1	
	OT2	LY30029-0B6A	SPACER(A),FOR LI BATTERY	

****

CCD BOARD ASSEMBLY <02>

PW	YB20899B-01	CCD BOARD ASSY,C,D,E,F	
	YB20899C-01	CCD BOARD ASSY,A,B	
Q5301	2SC3931/CD/-X	TRANSISTOR	
	or 2SC4774/RS/-X	TRANSISTOR	
R5301	NRSA02J-105X	MG RESISTOR,C,D,E,F	1MΩ,1/10W
R5302	NRSA02J-562X	MG RESISTOR	5.6kΩ,1/10W
R5303	NRSA02J-0R0X	MG RESISTOR	0Ω,1/10W
C5301	NCF21EZ-104X	CAPACITOR	0.1µF,25V
C5302	NBP21EM-155X	T CAPACITOR	1.5µF,25V
C5303	NCB21HK-102X	CAPACITOR,C,D,E,F	0.001µF,50V
C5304	NCF21EZ-104X	CAPACITOR	0.1µF,25V
C5305	NDC21HJ-270X	CAPACITOR	27pF,50V

# ⚠	REF No.	PART No.	PART NAME, DESCRIPTION	

****

C-VF BL BOARD ASSEMBLY <06> E,F

	PW	YB20901A	C-VF BL BOARD ASSY	
	Q7560	UMD3N	TRANSISTOR	
	Q7562	PUMX1	PAIR TRANSISTOR	
	D7560	NSCW100A0/ST/-X	LE DIODE	
	R7560	NRVA63D-332X	CMF RESISTOR	3.3kΩ,1/16W
	R7561	NRVA63D-561X	CMF RESISTOR	560Ω,1/16W
	R7562	NRSA63J-470X	MG RESISTOR	47Ω,1/16W
	R7565	NRSA63J-333X	MG RESISTOR	33kΩ,1/16W
	C7551	NCB31CK-104X	CAPACITOR	0.1μF,16V
	C7552	NCB31CK-104X	CAPACITOR	0.1μF,16V
	C7560	NCB31CK-104X	CAPACITOR	0.1μF,16V
	CN7551	QGF0505F1-20X	FPC CONNECOTR	
	CN7552	QGF0501F1-16X	FPC CONNECTOR	

****

MONITOR BOARD ASSEMBLY <07>

	PW	YB20900A-01	MONITOR BOARD ASSY,E,F
		YB20900B-01	MONITOR BOARD ASSY,A,B,C,D
	IC7501	TC7WH34FK	IC
	Q7501	2SC3647/ST/-X	POW TRANSISTOR
	Q7502	2SC3647/ST/-X	POW TRANSISTOR
	Q7503	DTA144EE	TRANSISTOR
	Q7504	2SC4617/QR/-X	TRANSISTOR
	Q7507	DTA144EE	TRANSISTOR
	R7501	NRSA63J-102X	MG RESISTOR 1kΩ,1/16W
	R7502	NRSA63J-102X	MG RESISTOR 1kΩ,1/16W
	R7503	NRSA63J-102X	MG RESISTOR 1kΩ,1/16W
	R7506	NRSA63J-473X	MG RESISTOR 47kΩ,1/16W
	R7507	NRSA63J-473X	MG RESISTOR 47kΩ,1/16W
	R7511	NRSA63J-223X	MG RESISTOR,E,F 22kΩ,1/16W
	R7512	NRSA63J-223X	MG RESISTOR,E,F 22kΩ,1/16W
	R7513	NRSA63J-103X	MG RESISTOR,A,B,C,D 10kΩ,1/16W
	R7514	NRSA63J-333X	MG RESISTOR,E,F 33kΩ,1/16W
	R7515	NRSA63J-302X	MG RESISTOR,A,B,C,D 3kΩ,1/16W
		NRSA63J-562X	MG RESISTOR,E,F 5.6kΩ,1/16W
	R7516	NVP0016-103X	TRIM RESISTOR,V COM
	R7517	NRSA63J-563X	MG RESISTOR 56kΩ,1/16W
	C7501	NCZ1016-120X	CAPACITOR 12pF,2kV
	C7502	NCB31EK-103X	CAPACITOR 0.01μF,25V
	C7503	NFV41HJ-273X	MPPS CAPACITOR 0.027μF,50V
	C7504	NCB31EK-103X	CAPACITOR 0.01μF,25V
	C7505	NCB10JK-106X	CAPACITOR 10μF,6.3V
	C7510	NCB31EK-103X	CAPACITOR,E,F 0.01μF,25V
	L7501	NQLZ010-680X	COIL 68μH
	L7502	NQL03BK-100X	COIL 10μH
	T7501	NQS0049-001X	SW TRANSF
	CN7501	QGF0501F1-28X	FPC CONNECTOR
	CN7502	QGF0505F1-24X	FPC CONNECTOR
	CN7503	QGA5002F1-02X	CONNECTOR
⚠	F7501	NMFZ009-R375XJ1	FUSE T0.37A
	OT1	LY41726-001A	PLATE(EARTH)

# ⚠	REF No.	PART No.	PART NAME, DESCRIPTION	

****

DSC BOARD ASSEMBLY <08> E,F

	PW	YB20898B	DSC BOARD ASSY
	IC8001	JCY0076B	IC
	IC8002	M32000D3FP	IC
		or M32000D4AFP	IC(MICRO C ROM)
		or M32000D4BFP	IC(MICRO C ROM)
	IC8003	MBV160T90PTA04	IC(MICRO C ROM)
	IC8006	MAX3221CAE	IC
	IC8007	TC7WU04FU	IC(DIGITAL)
	R8002	NRSA63J-101X	MG RESISTOR 100Ω,1/16W
	R8003	NRSA63J-101X	MG RESISTOR 100Ω,1/16W
	R8004	NRSA63J-104X	MG RESISTOR 100kΩ,1/16W
	R8005	NRSA63J-104X	MG RESISTOR 100kΩ,1/16W
	R8006	NRSA63J-102X	MG RESISTOR 1kΩ,1/16W
	R8007	NRSA63J-0R0X	MG RESISTOR 0Ω,1/16W
	R8012	NRSA63J-472X	MG RESISTOR 4.7kΩ,1/16W
	R8014	NRSA63J-100X	MG RESISTOR 10Ω,1/16W
	R8015	NRSA63J-100X	MG RESISTOR 10Ω,1/16W
	R8016	NRSA63J-100X	MG RESISTOR 10Ω,1/16W
	R8017	NRSA63J-100X	MG RESISTOR 10Ω,1/16W
	R8018	NRSA63J-100X	MG RESISTOR 10Ω,1/16W
	R8019	NRSA63J-100X	MG RESISTOR 10Ω,1/16W
	R8020	NRSA63J-100X	MG RESISTOR 10Ω,1/16W
	R8021	NRSA63J-100X	MG RESISTOR 10Ω,1/16W
	R8022	NRSA63J-100X	MG RESISTOR 10Ω,1/16W
	R8023	NRSA63J-100X	MG RESISTOR 10Ω,1/16W
	R8024	NRSA63J-100X	MG RESISTOR 10Ω,1/16W
	R8025	NRSA63J-100X	MG RESISTOR 10Ω,1/16W
	R8026	NRSA63J-100X	MG RESISTOR 10Ω,1/16W
	R8027	NRSA63J-105X	MG RESISTOR 1MΩ,1/16W
	R8029	NRSA63J-0R0X	MG RESISTOR 0Ω,1/16W
	R8030	NRSA63J-0R0X	MG RESISTOR 0Ω,1/16W
	C8001	NCB31CK-104X	CAPACITOR 0.1μF,16V
	C8002	NBE20JM-106X	T CAPACITOR 10μF,6.3V
	C8003	NCB31CK-104X	CAPACITOR 0.1μF,16V
	C8005	NCB31CK-104X	CAPACITOR 0.1μF,16V
	C8006	NCB31CK-104X	CAPACITOR 0.1μF,16V
	C8007	NCB31CK-104X	CAPACITOR 0.1μF,16V
	C8008	NCB31CK-104X	CAPACITOR 0.1μF,16V
	C8009	NCB31CK-104X	CAPACITOR 0.1μF,16V
	C8010	NCB31CK-104X	CAPACITOR 0.1μF,16V
	C8011	NCB31CK-104X	CAPACITOR 0.1μF,16V
	C8012	NCB31CK-104X	CAPACITOR 0.1μF,16V
	C8013	NCB31CK-104X	CAPACITOR 0.1μF,16V
	C8014	NBE50JM-107X	T CAPACITOR 100μF,6.3V
	C8015	NCB31CK-104X	CAPACITOR 0.1μF,16V
	C8016	NCB31CK-104X	CAPACITOR 0.1μF,16V
	C8017	NCB31HK-102X	CAPACITOR 0.001μF,50V
	C8018	NCB31CK-104X	CAPACITOR 0.1μF,16V
	C8019	NCB31CK-104X	CAPACITOR 0.1μF,16V
	C8020	NCB31CK-104X	CAPACITOR 0.1μF,16V
	C8021	NCB31CK-104X	CAPACITOR 0.1μF,16V
	C8022	NCB31CK-104X	CAPACITOR 0.1μF,16V
	C8023	NCB31CK-104X	CAPACITOR 0.1μF,16V
	C8024	NCB31CK-104X	CAPACITOR 0.1μF,16V
	C8025	NBE50JM-107X	T CAPACITOR 100μF,6.3V
	C8026	NCB31CK-104X	CAPACITOR 0.1μF,16V
	C8032	NCB31CK-104X	CAPACITOR 0.1μF,16V

# ⚠ REF No.	PART No.	PART NAME, DESCRIPTION	
	C8033	NCB31CK-104X	CAPACITOR	0.1µF,16V
	C8034	NCB31CK-104X	CAPACITOR	0.1µF,16V
	C8035	NCB31CK-104X	CAPACITOR	0.1µF,16V
	C8036	NCB31CK-104X	CAPACITOR	0.1µF,16V
	C8037	NCB31CK-104X	CAPACITOR	0.1µF,16V
	C8038	NBE20JM-106X	T CAPACITOR	10µF,6.3V
	C8040	NDC31HJ-270X	CAPACITOR	27pF,50V
	C8041	NBE20JM-106X	T CAPACITOR	10µF,6.3V
	C8042	NBE20JM-106X	T CAPACITOR	10µF,6.3V
	C8043	NBE20JM-106X	T CAPACITOR	10µF,6.3V
	C8044	NBE20JM-106X	T CAPACITOR	10µF,6.3V
	L8001	NQL024J-100X	COIL	10µH
	L8002	NQL034K-150X	COIL	15µH
	L8003	NQL024J-100X	COIL	10µH
	L8004	NQL024J-100X	COIL	10µH
	L8005	NQR0129-002X	FERRITE BEAD	
	X8001	NAX0354-001X	RESONATOR	
	WR1	WJM0179-001A	E-SI C WIRE C-F,JP8001/JP8002	
	J8001	QNS0181-001	2.5 JACK	
	CN8001	QGF0301F1-39X	FPC CONNECTOR	

****

E.VF BOARD ASSEMBLY <60> A,B,C,D

	PW	LY41289-002A	E.VF BOARD ASSY	
	IC7001	BA7149F-XE	IC	
	Q7001	2SD968A(RS)	PH TRANSISTOR	
	Q7002	2SA1748(QR)	PH TRANSISTOR	
	Q7003	2SA1748(QR)	PH TRANSISTOR	
	D7001	MA142WA	SI DIODE	
	R7002	NRSA02J-3R9X	MG RESISTOR	3.9Ω,1/10W
	R7003	NRVA02D-153X	CMF RESISTOR	15kΩ,1/10W
	R7005	NRSA02J-102X	MG RESISTOR	1kΩ,1/10W
	R7006	NRSA02J-113X	MG RESISTOR	11kΩ,1/10W
	R7007	NRSA02J-330X	MG RESISTOR	33Ω,1/10W
	R7008	NRSA02J-394X	MG RESISTOR	390kΩ,1/10W
	R7009	NRSA02J-103X	MG RESISTOR	10kΩ,1/10W
	R7010	NRVA02D-104X	CMF RESISTOR	100kΩ,1/10W
	R7011	NRSA02J-223X	MG RESISTOR	22kΩ,1/10W
	R7012	NRSA02J-221X	MG RESISTOR	220Ω,1/10W
	R7013	NRSA02J-102X	MG RESISTOR	1kΩ,1/10W
	R7014	NRSA02J-472X	MG RESISTOR	4.7kΩ,1/10W
	R7015	NRSA02J-223X	MG RESISTOR	22kΩ,1/10W
	R7016	NRSA02J-122X	MG RESISTOR	1.2kΩ,1/10W
	R7017	NRSA02J-472X	MG RESISTOR	4.7kΩ,1/10W
	R7018	NRSA02J-223X	MG RESISTOR	22kΩ,1/10W
	R7019	NRSA02J-120X	MG RESISTOR	12Ω,1/10W
	R7020	NRS181J-685X	MG RESISTOR	6.8MΩ,1/8W
	R7021	NRSA02J-475X	MG RESISTOR	4.7MΩ,1/10W
	R7022	NRSA02J-475X	MG RESISTOR	4.7MΩ,1/10W
	R7023	NRSA02J-564X	MG RESISTOR	560kΩ,1/10W
	R7024	NRSA02J-105X	MG RESISTOR	1MΩ,1/10W
	R7025	NRSA02J-275X	MG RESISTOR	2.7MΩ,1/10W
	R7026	NRSA02J-275X	MG RESISTOR	2.7MΩ,1/10W
	R7029	NRSA02J-102X	MG RESISTOR	1kΩ,1/10W
	R7030	NRSA02J-102X	MG RESISTOR	1kΩ,1/10W
	VR7001	NVP0001-221X	TRIM RESISTOR,V.SIZE	
	VR7002	NVP0001-225X	TRIM RESISTOR,BRIGHT	
	VR7003	PERE0595-565	V RESISTOR,FOCUS	
	C7001	QFV11HJ-104A	F CAPACITOR	0.1µF,50V
	C7002	QEDP1AM-227	E CAPACITOR	220µF,10V
	C7003	QEDP1AM-227	E CAPACITOR	220µF,10V
	C7004	QEDP1AM-227	E CAPACITOR	220µF,10V
	C7005	NCF21CZ-105X	CAPACITOR	1µF,16V
	C7006	NCB21HK-152X	CAPACITOR	0.0015µF,50V
	C7007	NCB11CK-105X	CAPACITOR	1µF,16V
	C7008	NCF21CZ-105X	CAPACITOR	1µF,16V
	C7009	PECA1131-A107	E CAPACITOR	100µF,10V
	C7010	PECA1135-Y	CAPACITOR	5600pF,100V
	C7011	NDC21HJ-180X	CAPACITOR	18pF,50V
	C7012	QEKC1HM-105Z	E CAPACITOR	1µF,50V
	C7013	NCF21HZ-104X	CAPACITOR	0.1µF,50V
	C7014	NCF21HZ-104X	CAPACITOR	0.1µF,50V
	C7015	QCZ0212-151	CAPACITOR	150pF,1kV
	C7016	PECA1006	CAPACITOR	330pF,500V
	L7001	QQR0970-001	LINEARITY COIL	12µH
	L7002	PU49994-220	COIL	22µH
	L7003	PELN1101-680JY	COIL	68µH
⚠	T7001	QQH0011-002	FB TRANSF	
	CN7001	PEMC0856-4	CONNECTOR	
	CN7002	QGA1501C1-05	CONNECTOR,with WIRE	
	CN7003	WJK0025-001A	E-SI C WIRE C-B	

SECTION 4
CHARTS AND DIAGRAMS

NOTES OF SCHEMATIC DIAGRAM

Safety precautions
The Components identified by the symbol ⚠ are critical for safety. For continued safety, replace safety critical components only with manufacturer's recommended parts.

1. Units of components on the schematic diagram

Unless otherwise specified.

1) All resistance values are in ohm, 1/6 W, 1/8 W (refer to parts list).
   Chip resistors are 1/16 W.
   K: KΩ (1000Ω), M: MΩ (1000KΩ)
2) All capacitance values are in μF, (P: PF).
3) All inductance values are in μH, (m: mH).
4) All diodes are 1SS133, MA165 or 1N4148M (refer to parts list).

2. Indications of control voltage

AUX : Active at high

$\overline{\text{AUX}}$ or AUX(L) : Active at low

3. Interpreting Connector indications

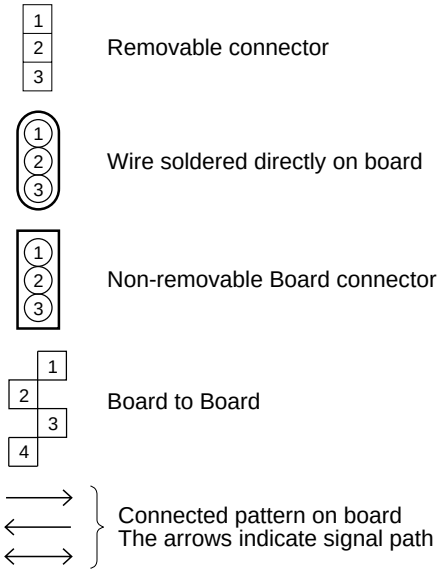

4. Voltage measurement

1) Video circuits
   REC : Colour bar signal in SP mode, normal VHS mode
   PB : Alignment tape, colour bar SP mode, normal VHS mode
   — : Unmeasurable or unnecessary to measure
2) Audio circuits
   REC : 1KHz, –8 dBs sine wave signal in SP mode, Normal VHS mode
   PB : REC then playback it
3) Movie Camera circuits
   Measured using a correctly illuminated gray scale or colour bar test charts in the E-E mode
4) Indication on schematic diagram
   Voltage Indications for REC and PB mode on the schematic diagram are as shown below.

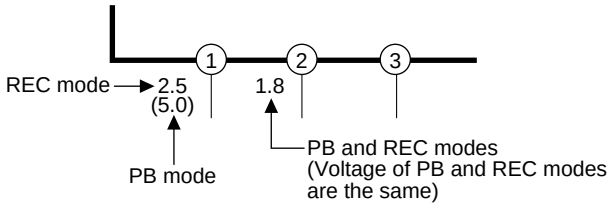

Note: If the voltages are not indicated on the schematic diagram, refer to the voltage charts.

5. Waveform measurement

1) Video circuits
   REC : Colour bar signal in SP mode, normal VHS mode
   PB : Alignment tape, colour bar SP mode, normal VHS mode
2) Audio circuits
   REC : 1KHz, –8 dBs sine wave signal in SP mode, normal VHS mode
   PB : REC then playback it
3) Movie Camera circuits
   Measured using a correctly illuminated gray scale or colour bar test chatrs in the E-E mode
4) Indication on schematic diagram
   Waveform indications on the schematic diagram are as shown below.

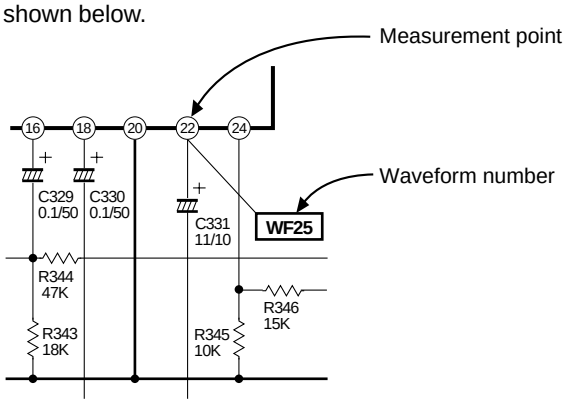

5) Waveform indications

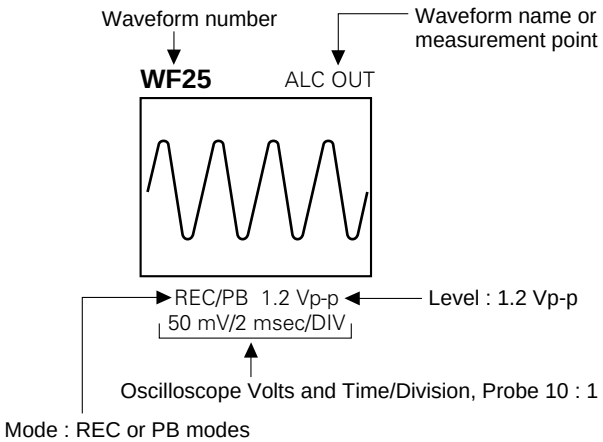

6. Signal path Symbols

The arrows indicate the signal path as follows.

Playback signal path

Playback and recording signal path

Recording signal path
(including E-E signal path)

Capstan servo path

Drum servo path

(Example)

R-Y Playback R-Y signal path

Y Recording Y signal path

7. Indication of the parts for adjustments

The parts for the adjustments are surrounded with the circle as shown below.

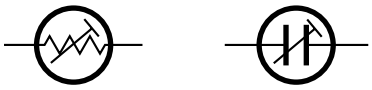

8. Indication of the parts not mounted on the circuit board

"OPEN" is indicated by the parts not mounted on the circuit board.

CIRCUIT BOARD NOTES

1. Foil and Component sides

1) Foil side (B side) :
   Parts on the foil side seen from foil face (pattern face) are indicated.
2) Component side (A side) :
   Parts on the component side seen from component face (parts face) indicated.

2. Parts location guides

Parts location are indicated by guide scale on the circuit board.

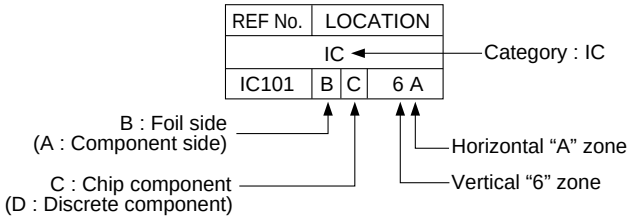

Note:

For general information in service manual, please refer to the Service Manual of GENERAL INFORMATION Edition 4 No. 82054D (January 1994).

4.1 BOARD INTERCONNECTIONS

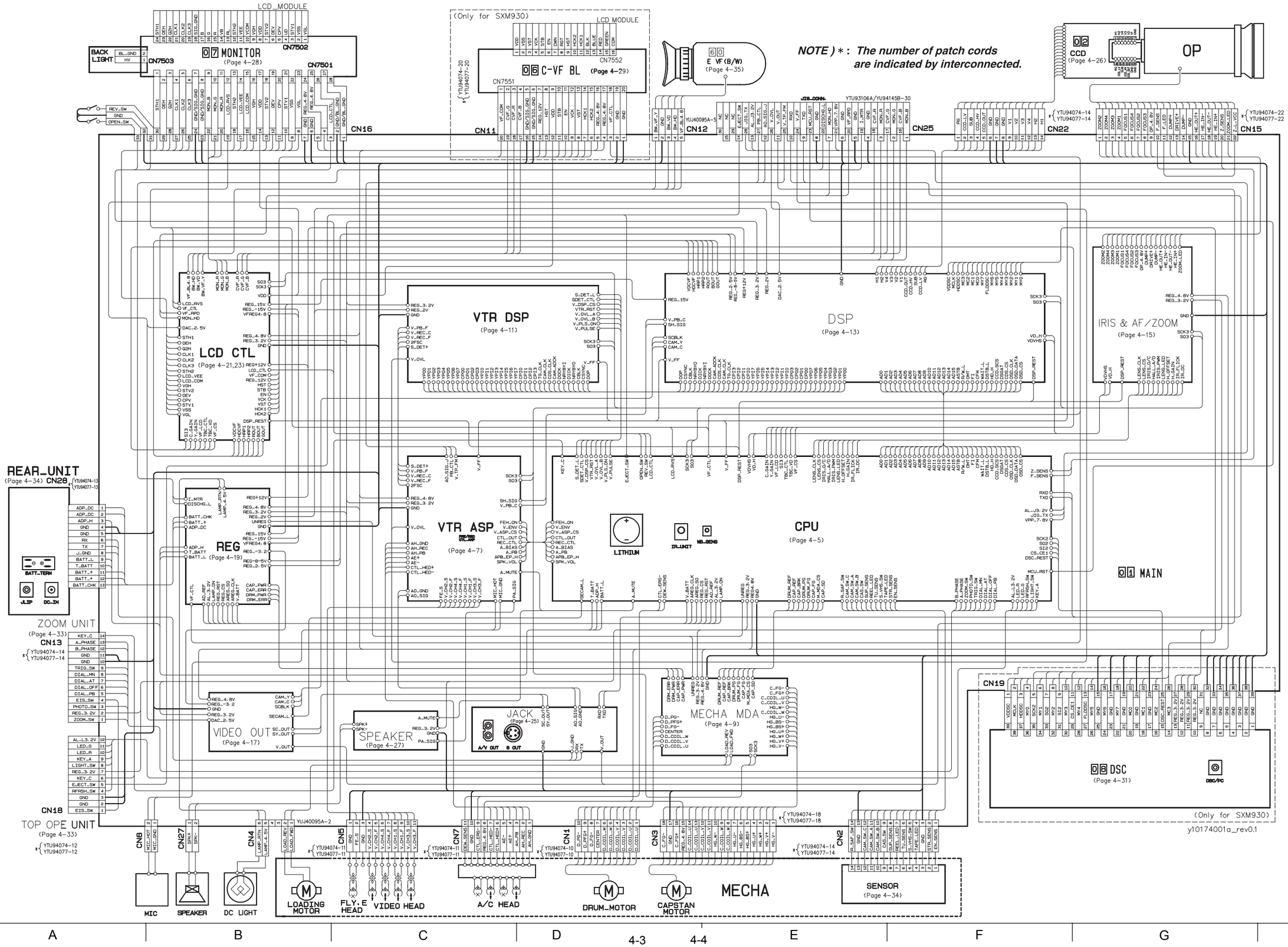

4.2 CPU SCHEMATIC DIAGRAM

NOTES: ● ***For the destination of each signal and further line connections that are cut off from this diagram, refer to "4.1 BOARD INTERCONNECTIONS".***
● ***When ordering parts, be sure to order according to the Part Number indicated in the Parts List.***

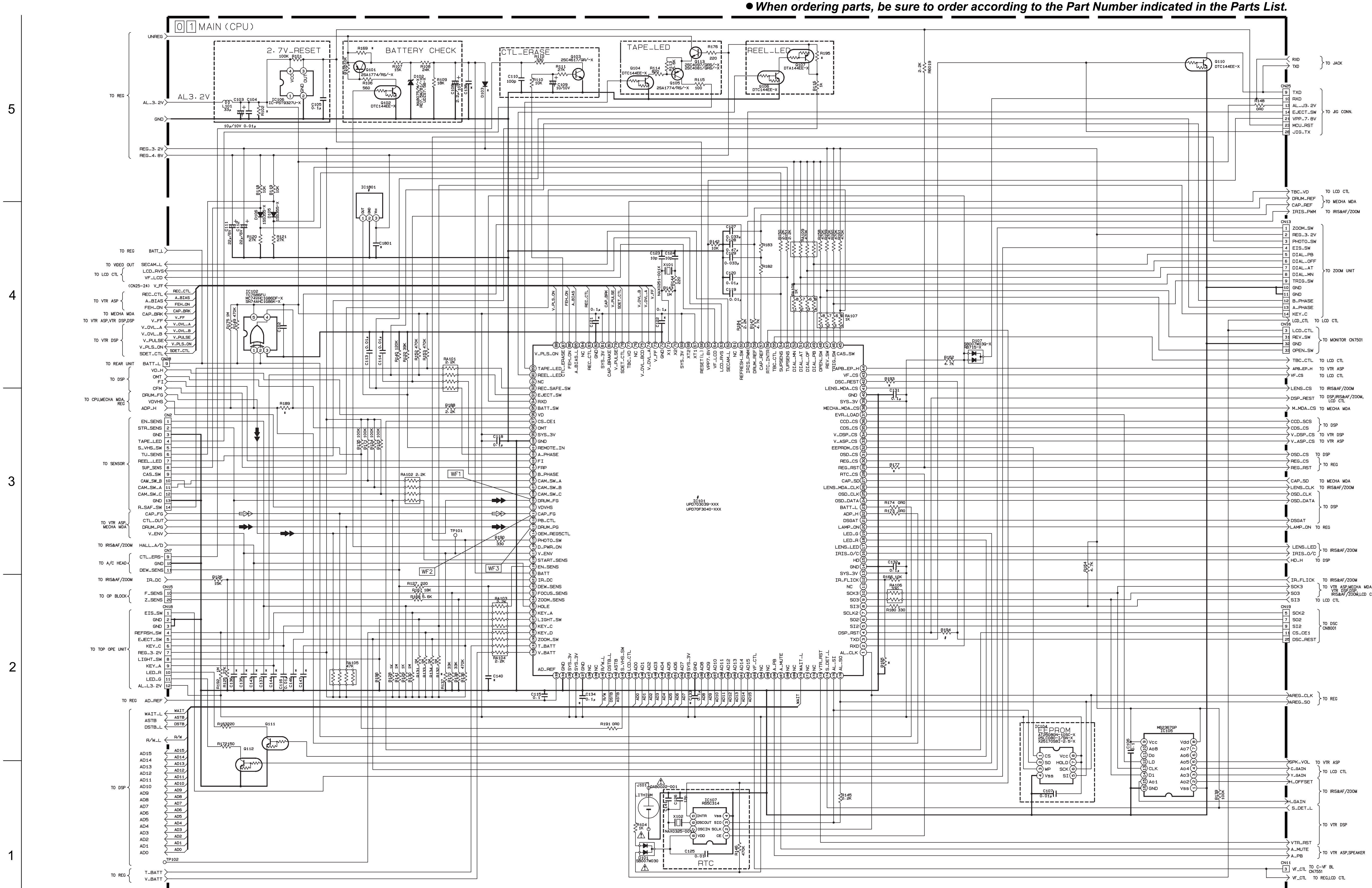

NOTES : 1.THE PARTS WITH MARKED (*) IS NOT USED.
2. For CPU waveforms, please refer to page 4-63.

IC101	
MODEL	ROM_No
PAL picture element low	-026
PAL others	-027
NTSC JVC	-028
NTSC RCA JVC	-029

REMOCON	YES	NO
IC1801	PIC-26043S	*

DSC	YES	NO
R194	0R0	*

A B C D E F G H

4.3 VTR ASP SCHEMATIC DIAGRAM

NOTES: ● ***For the destination of each signal and further line connections that are cut off from this diagram, refer to "4.1 BOARD INTERCONNECTIONS".***
● ***When ordering parts, be sure to order according to the Part Number indicated in the Parts List.***

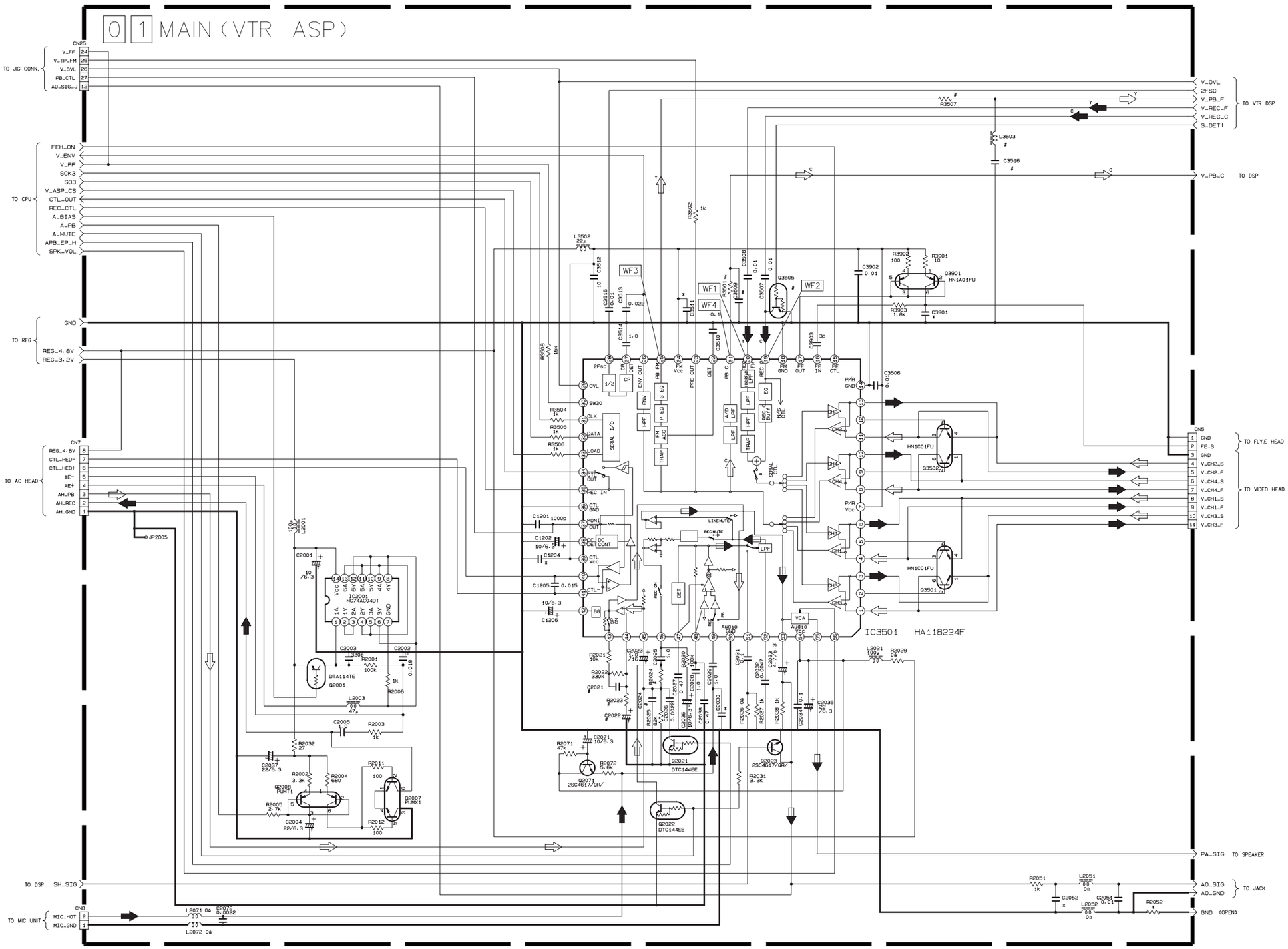

NOTES : 1.THE PARTS WITH MARKED (*) IS NOT USED.
2. For VTR ASP waveforms, please refer to page 4-63.

EXCHANGE PARTS LIST

[VIDEO]

	VHS MODEL	SVHS MODEL
Q3505	*	DTC144 EE

	NTSC	PAL
R3507	0	100
L3503	*	5.6
C3516	*	10p
R3501	0	220
C3509	*	220p

[AUDIO]

	NTSC	PAL
R2023	150	82
R2024	13k	18k
C2021	0.0068	0.01
C2022	10μ/6.3	15μ/6.3
C2024	0.0012	0.001

*... NO WEAR

y20114001a_rev0.0

4.4 MECHA MDA SCHEMATIC DIAGRAM

NOTES: ● ***For the destination of each signal and further line connections that are cut off from this diagram, refer to "4.1 BOARD INTERCONNECTIONS".***
● ***When ordering parts, be sure to order according to the Part Number indicated in the Parts List.***

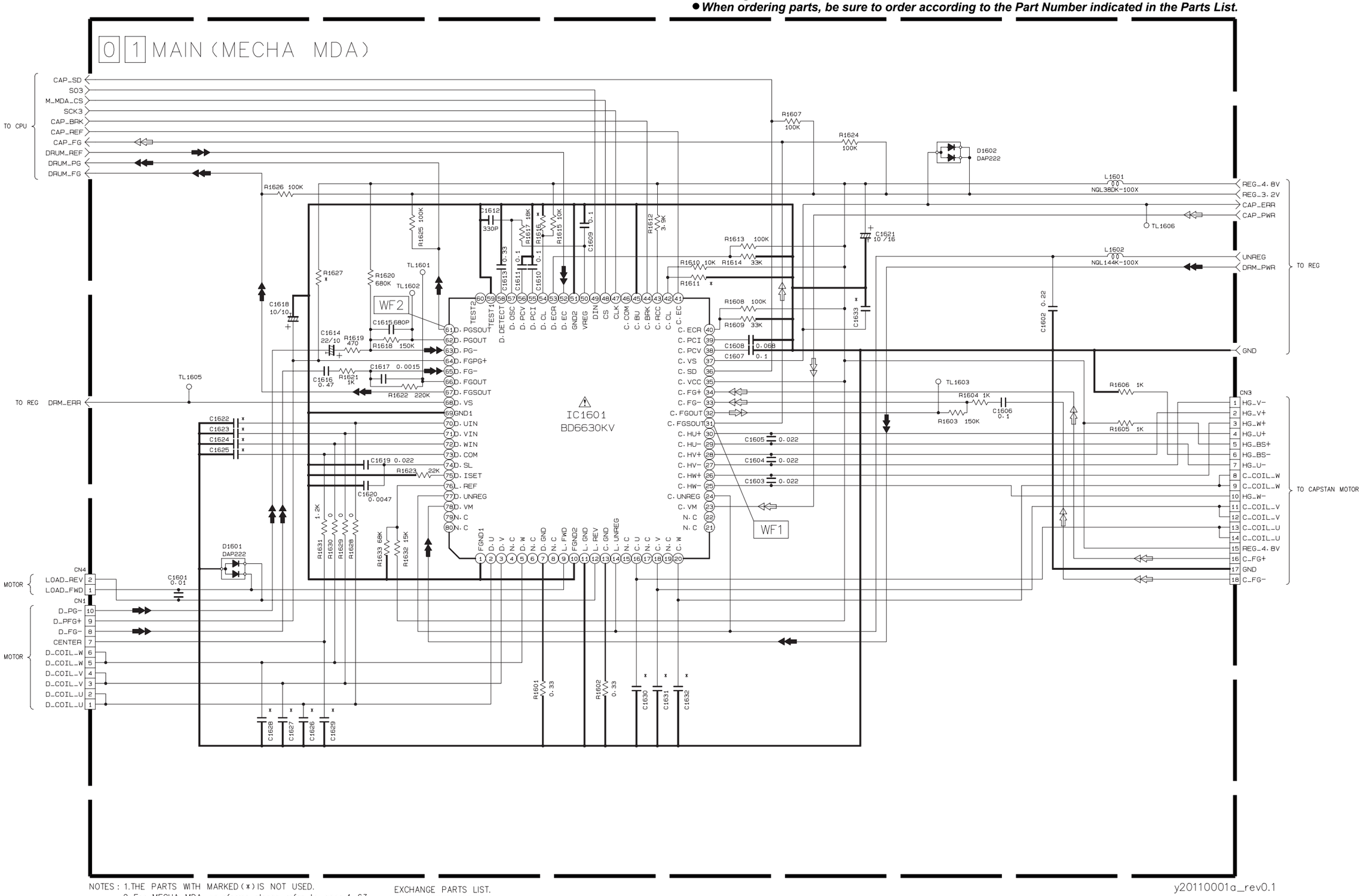

4.5 VTR DSP SCHEMATIC DIAGRAM

NOTES: ● ***For the destination of each signal and further line connections that are cut off from this diagram, refer to "4.1 BOARD INTERCONNECTIONS".***
● ***When ordering parts, be sure to order according to the Part Number indicated in the Parts List.***

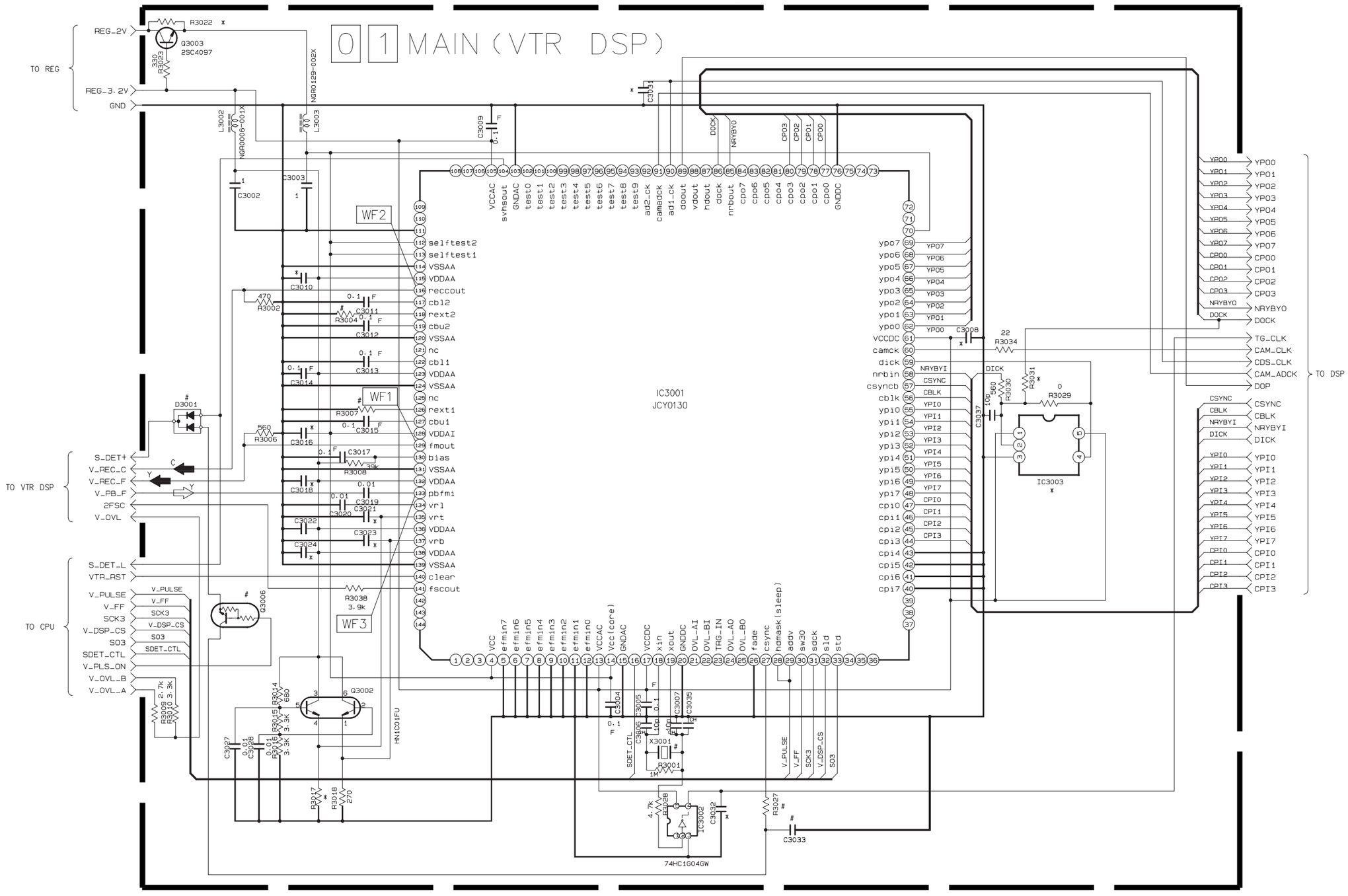

NOTES : 1.THE PARTS WITH MARKED (*) IS NOT USED.
2. For VTR DSP waveforms, please refer to page 4-63.

y30117001a_rev0.0

EXCHANGE PARTS LIST

	PAL	NTSC
X3001	QAX0596-001 or QAX0609-001	QAX0565-001 or QAX0608-001
R3004	33k	27k
R3007	18k	15k

	VHS MODEL	SVHS MODEL
D3001	*	DAN222
Q3006	*	DTC144EE
R3027	*	10k
C3033	*	0.1

*... NO WEAR

4.6 DSP SCHEMATIC DIAGRAM

NOTES:
- ***For the destination of each signal and further line connections that are cut off from this diagram, refer to "4.1 BOARD INTERCONNECTIONS".***
- ***When ordering parts, be sure to order according to the Part Number indicated in the Parts List.***

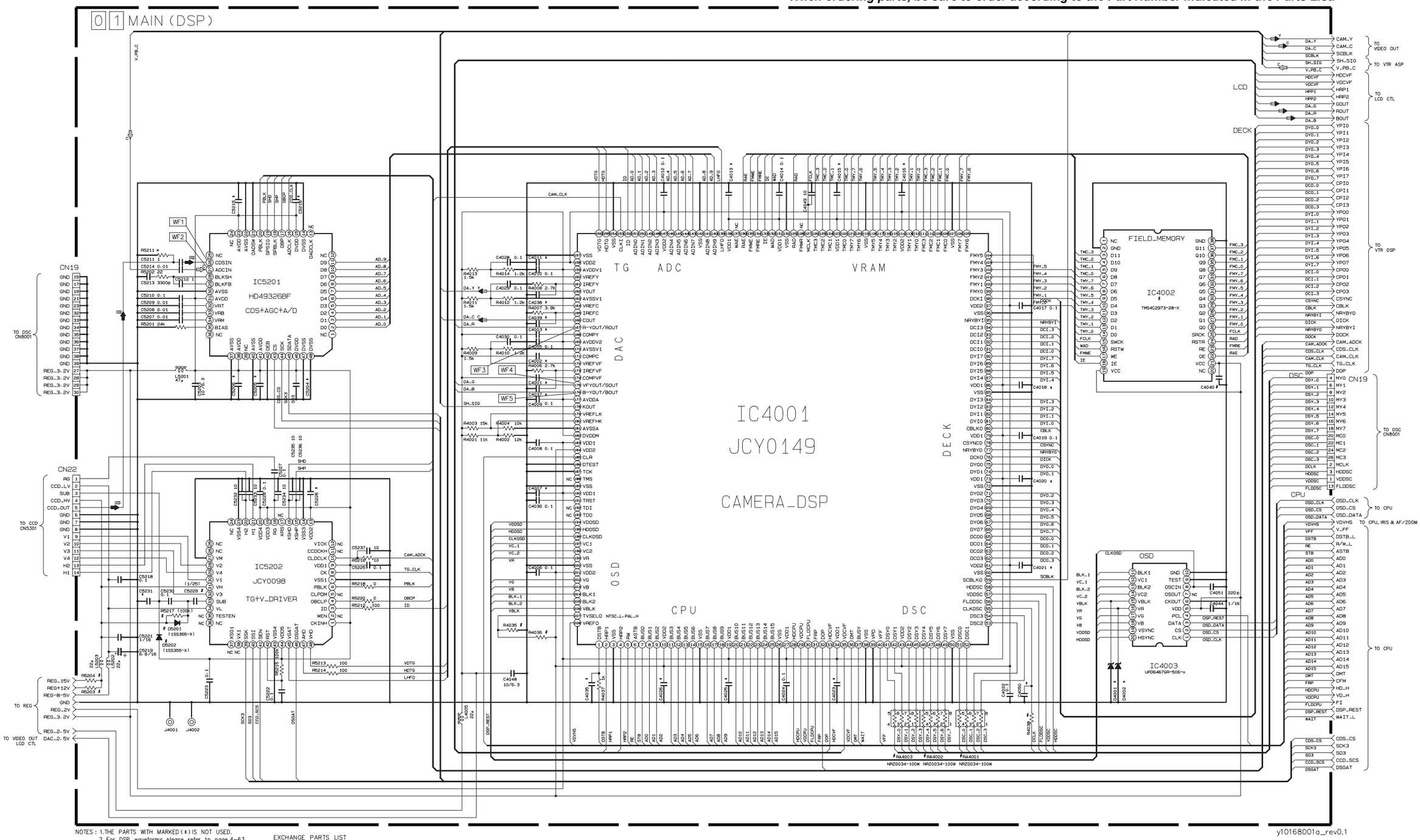

NOTES : 1.THE PARTS WITH MARKED (*) IS NOT USED.
2. For DSP waveforms, please refer to page 4-63.

EXCHANGE PARTS LIST

	CCD	R4035	R4036	R5203	R5204	D5201	D5202	R5217	C5229
NTSC_L	TCD5621P	0	*	*	0	*	1SS355-X	*	0
	MN391132FT	0	*	*	0	1SS355-X	*	100K	1/25
PAL_L	MN372132FT	*	0	*	0	1SS355-X	*	100K	1/25
	ICX227AK	*	0	0	*	1SS355-X	*	100K	1/25
PAL_H	MN39241FT	*	0	*	0	1SS355-X	*	100K	1/25
	ICX229AK	*	0	0	*	1SS355-X	*	100K	1/25

	IC4002	C4040	R4038	R4001	R4002	R4003
M1#6	*	*	*	*	*	*
M1#7	TMS4C2973-28-X	1	*	*	*	*
M1#8	TMS4C2973-28-X	1	100	NRZ0034-100W	NRZ0034-100W	NRZ0034-100W

y10168001a_rev0.1

4.7 IRIS & AF/ZOOM SCHEMATIC DIAGRAM

NOTES: ***● For the destination of each signal and further line connections that are cut off from this diagram, refer to "4.1 BOARD INTERCONNECTIONS".***
● When ordering parts, be sure to order according to the Part Number indicated in the Parts List.

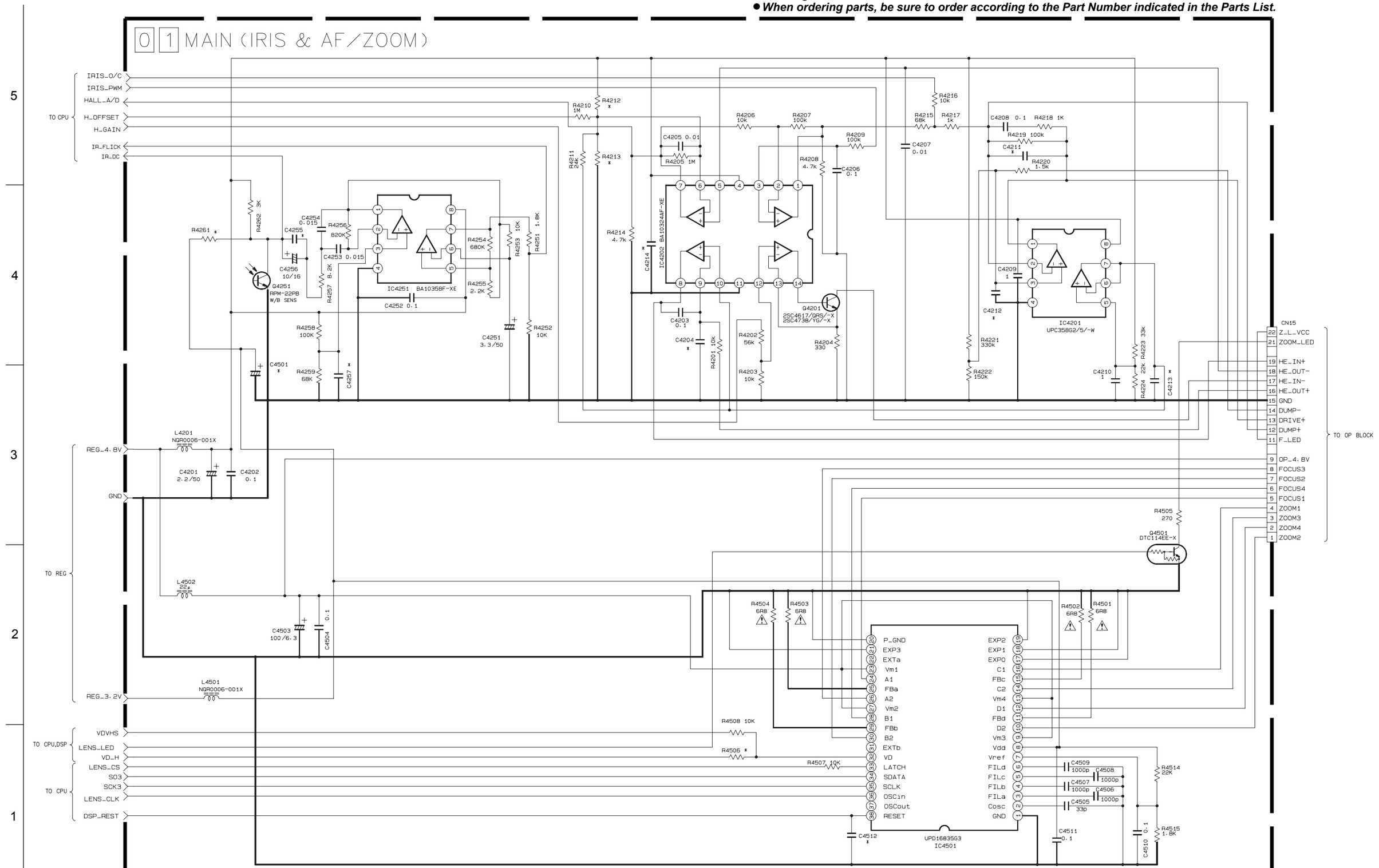

4.8 VIDEO OUT SCHEMATIC DIAGRAM

NOTES:
- ***For the destination of each signal and further line connections that are cut off from this diagram, refer to "4.1 BOARD INTERCONNECTIONS".***
- ***When ordering parts, be sure to order according to the Part Number indicated in the Parts List.***

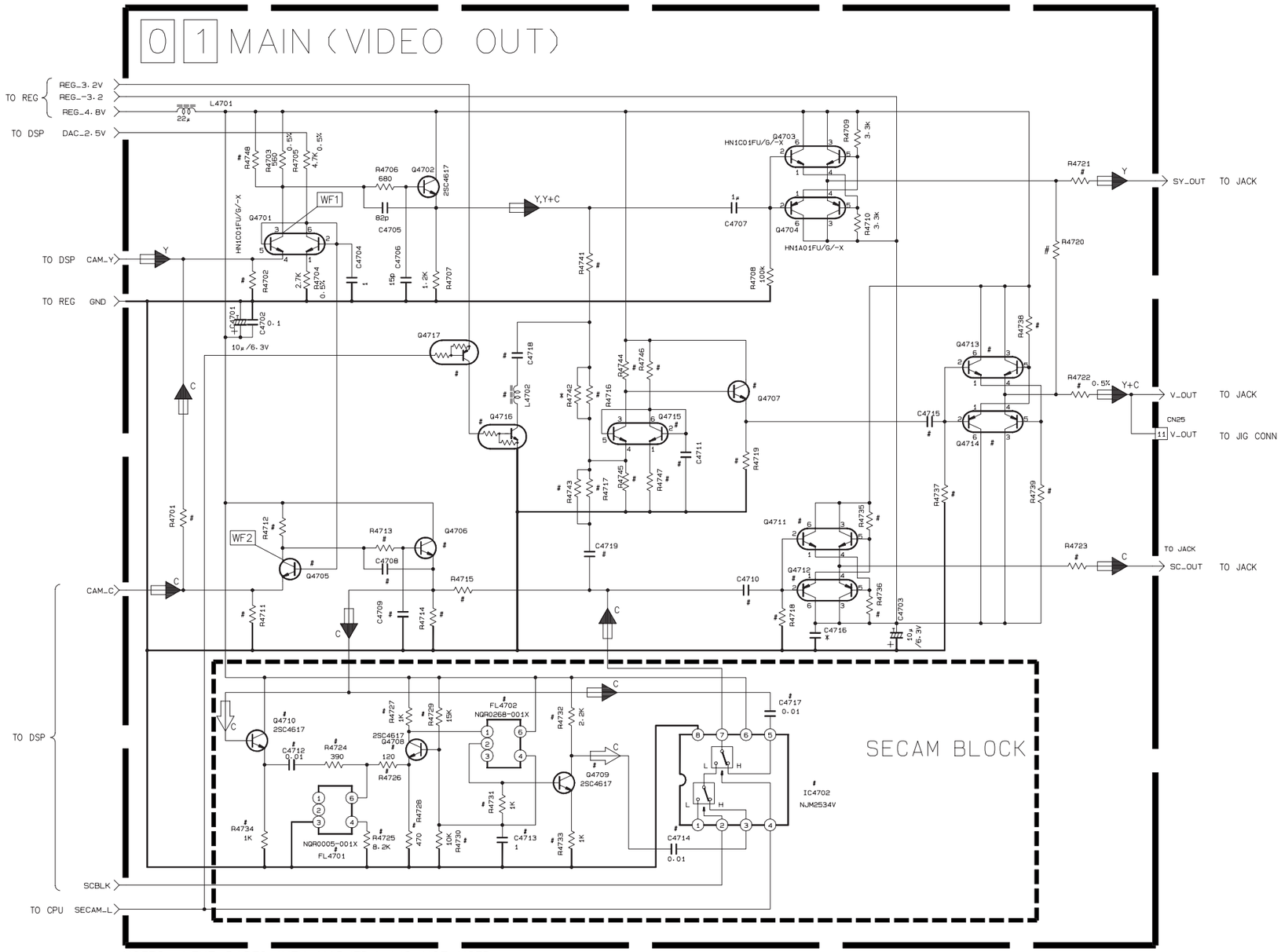

NOTES : 1.THE PARTS WITH MARKED (*) IS NOT USED.
2.For VIDEO OUT waveforms, please refor to page 4-63.

y30116001a_rev0.2

EXCHANGE PARTS LIST

	R4711	R4712	R4713	R4714	C4708	C4709	Q4705	Q4706	R4721	C4710	R4718	R4735	R4736	Q4711	Q4712	R4723	R4741	R4715	C4716	R4717	C4719	R4744	R4745	R4746	R4747	Q4715	C4711	Q4707	R4719	C4715	R4737	Q4713	Q4714	R4738	R4739
VHS MODEL	*	*	*	*	*	*	*	*	*	*	*	*	*	*	*	*	*	*	*	*	*	*	*	*	*	*	*	*	*	*	*	*	*	*	*
SVHS MODEL	150	510 0.5%	680	1.2k	82p	15p	2SC 4617	2SC 4617	75 0.5%	0.01	100k	3.3k	3.3k	HN1C 01FU	HN1A 01FU	68 0.5%	1.5k 0.5%	560 0.5%	620 0.5%	2.2k 0.5%	0.01	2.2k 0.5%	470	2.2k 0.5%	470 0.5%	HN1C 01FU	1	2SC 4617	2.2K	1	100K	HN1C 01FU	HN1A 01FU	3.3K	3.3K

	R4715	Q4716	Q4717	L4702	C4718	SECAM BLOCK
VHS MODEL	*	*	*	*	*	*
SVHS EG MODEL	*	DTC144 EE	DTA144 EE	56	24p	◯
SVHS OTHER MODEL	0Ω	*	*	*	*	*

	R4701	R4702	R4720	R4722	R4743	R4748
VHS MODEL PAL	0Ω	75	0Ω	75 0.5%	*	33K 0.5%
VHS MODEL NTSC	↑	↑	↑	↑	↑	*
SVHS MODEL PAL	*	100	*	68 0.5%	15K 0.5%	0Ω
SVHS MODEL NTSC	↑	↑	↑	↑	22K 0.5%	↑

*... NO WEAR

4.9 REGULATOR SCHEMATIC DIAGRAM

NOTES: ***● For the destination of each signal and further line connections that are cut off from this diagram, refer to "4.1 BOARD INTERCONNECTIONS".***
● When ordering parts, be sure to order according to the Part Number indicated in the Parts List.

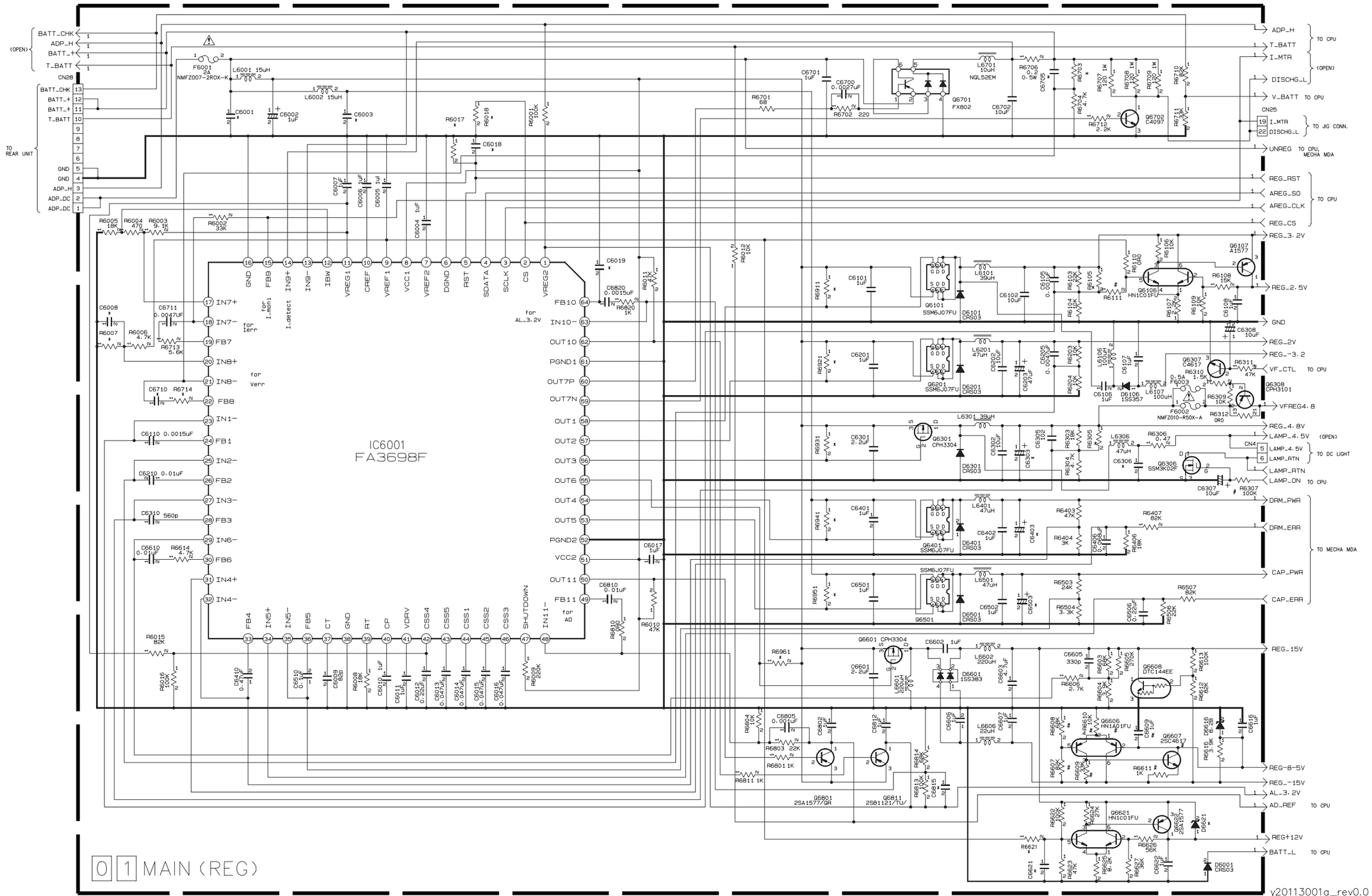

NOTE : THE PARTS WITH MARKED (*) IS NOT USED.
EXCHANGE LIST

1. LIGHT YES OR NO

LIGHT	YES	NO
Q6306	exist	open
L6306	exist	open
C6307	exist	open
R6306-6307	exist	open

2. LCD YES OR NO

LCD	YES	NO
Q6307-6308	exist	open
R6309-6311	exist	open
C6308	exist	open
R6312	open	0R0

3. CCD VOLTAGE

CCD VOLTAGE	PAL		NTSC
picture elements	LOW	others	
memory	NO		
D6616	8.2V	5.1V	8.2V

4.10 LCD CTL SCHEMATIC DIAGRAM

— FOR AXM230/SXM330 —

NOTES: ***● For the destination of each signal and further line connections that are cut off from this diagram, refer to "4.1 BOARD INTERCONNECTIONS".***
● When ordering parts, be sure to order according to the Part Number indicated in the Parts List.

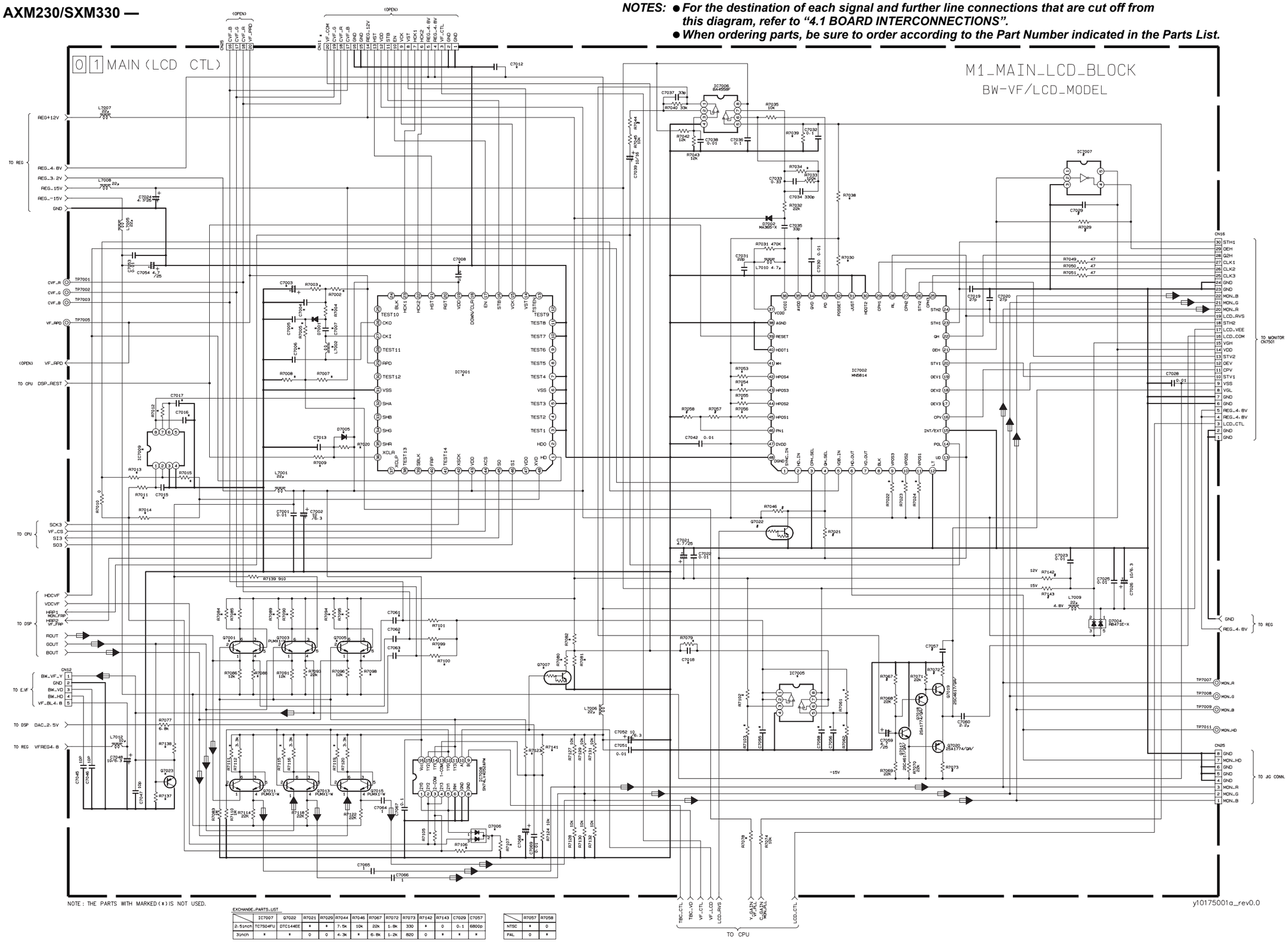

EXCHANGE_PARTS_LIST

	IC7007	G7022	R7021	R7029	R7044	R7046	R7067	R7072	R7073	R7142	R7143	C7029	C7057
2.5inch	TC7S04FU	DTC144EE	*	*	7.5k	10k	22k	1.8k	330	*	0	0.1	6800p
3inch	*	*	0	0	4.3k	*	6.8k	1.2k	820	0	*	*	*

	R7057	R7058
NTSC	*	0
PAL	0	*

4.11 LCD CTL SCHEMATIC DIAGRAM

— FOR SXM930 —

NOTES:
- ***For the destination of each signal and further line connections that are cut off from this diagram, refer to "4.1 BOARD INTERCONNECTIONS".***
- ***When ordering parts, be sure to order according to the Part Number indicated in the Parts List.***

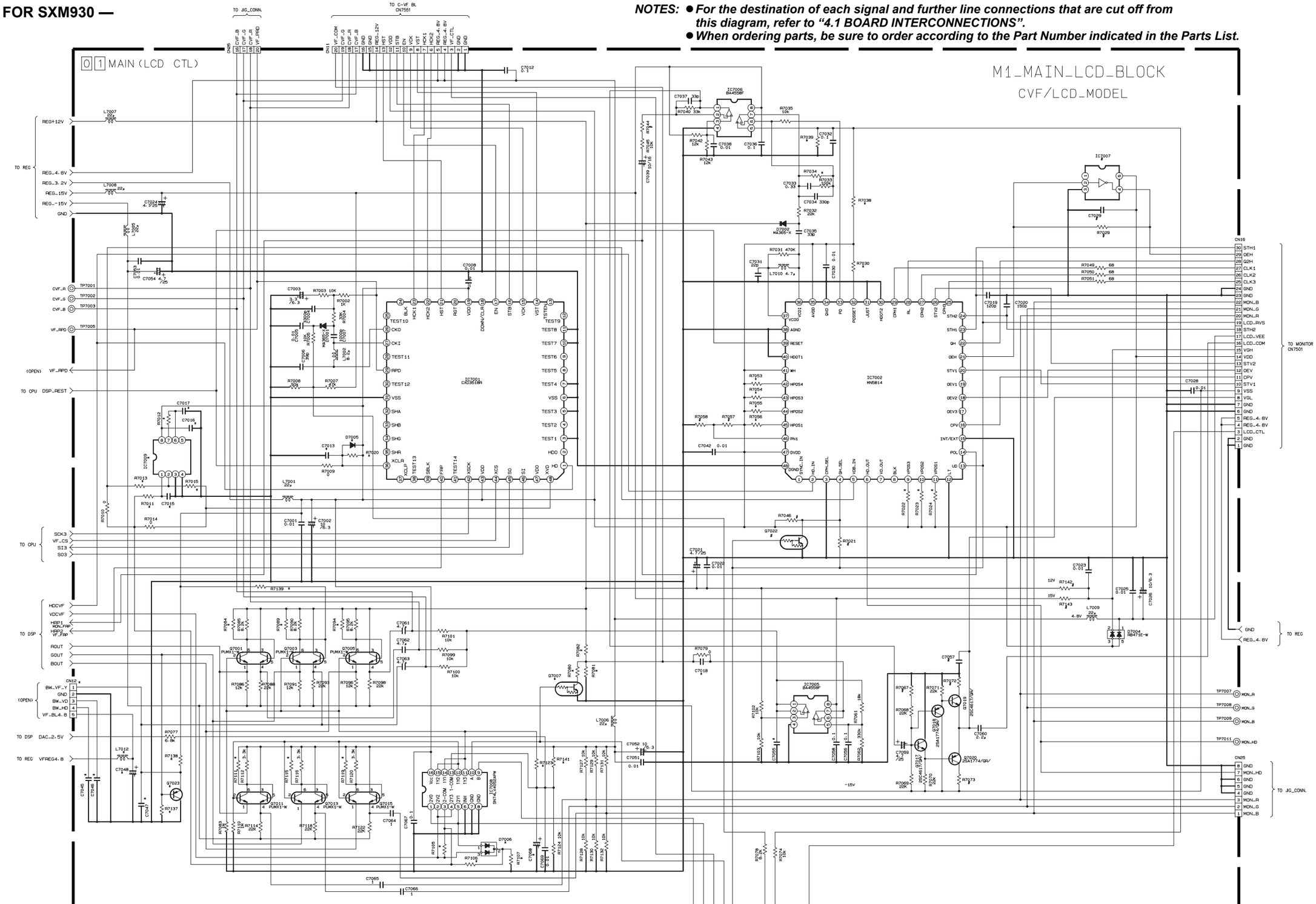

EXCHANGE_PARTS_RIST

	IC7007	Q7022	R7021	R7029	R7044	R7046	R7067	R7072	R7073	R7142	R7143	C7029	C7057
2.5inch	TC7S04FU	DTC144EE	*	*	7.5k	10k	22k	1.8k	330	*	0	0.1	6800p
3inch	*	*	0	0	4.3k	*	6.8k	1.2k	820	0	*	*	*

	R7057	R7058
NTSC	*	0
PAL	0	*

4.12 JACK AND CCD SCHEMATIC DIAGRAMS

NOTES: ● ***For the destination of each signal and further line connections that are cut off from this diagram, refer to "4.1 BOARD INTERCONNECTIONS".***
● ***When ordering parts, be sure to order according to the Part Number indicated in the Parts List.***

— JACK —

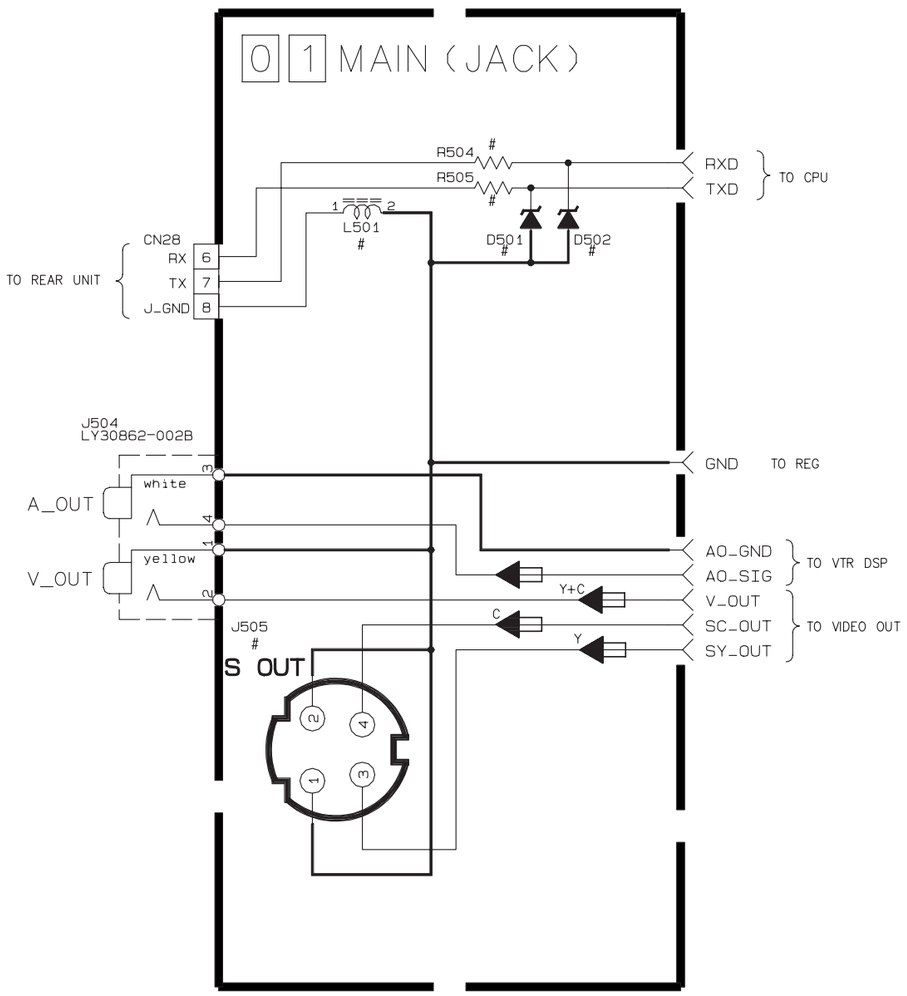

y40066001a_rev0.0

— CCD —

Note: IC5301 is incorporated in the CCD base assembly. When IC5301 needs replacement, replace the CCD base assembly in whole because it cannot be replaced alone.

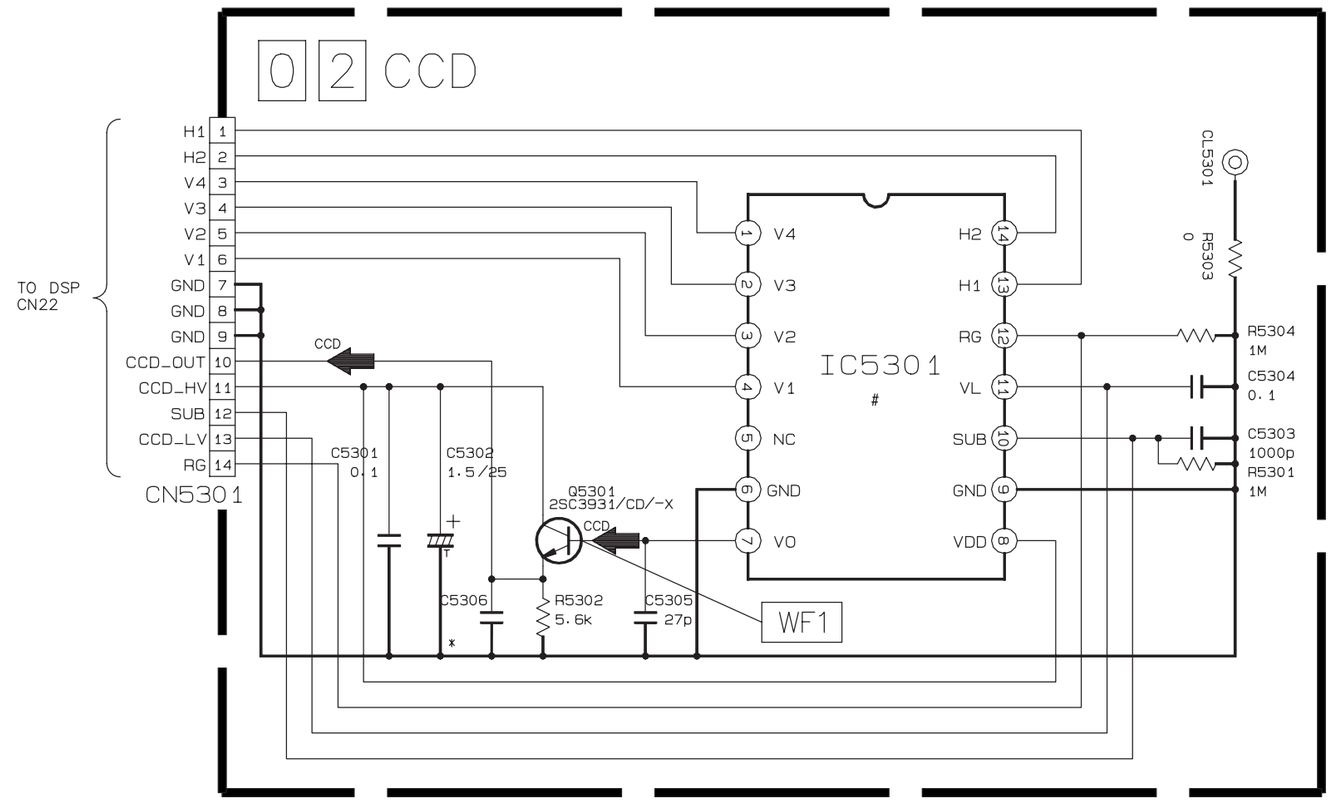

NOTES : 1.THE PARTS WITH MARKED (*) IS NOT USED.
2. For CCD waveform, please refer to page 4-63.

y40065001a_rev0.1

EXCHANGE PARTS LIST

	JLIP-MODEL	NON JLIP-MODEL
L501	NQR0129-002	*
D501	MA8068-X	*
D502	MA8068-X	*
R504	NRSA63J-221X	*
R505	NRSA63J-331X	*

	S-VHS MODEL	N-VHS MODEL
J505	QND0078-001	*

*:NO WEAR

EXCHANGE PARTS LIST

MODEL	CCD PWB ASSY	IC5301	R5301	R5304	C5303	CCD_HV	CCD_LV
NTSC-L	YB20899C-##	TCD5621P	*	*	*	15V	-8V
NTSC-L	YB20899B-##	MN39117FT	1M	*	1000p	15V	-8V
PAL-L	YB20899A-##	MN372132FT	1M	1M	1000p	15V	-8V
PAL-L	YB20899A-##	ICX227AK	1M	1M	1000p	12V	-5V
PAL-H	YB20899A-##	MN39241FT	1M	1M	1000p	15V	-8V
PAL-H	YB20899A-##	ICX229AK	1M	1M	1000p	12V	-5V

4.13 SPEAKER AND MONITOR SCHEMATIC DIAGRAMS

NOTES:
- ***For the destination of each signal and further line connections that are cut off from this diagram, refer to "4.1 BOARD INTERCONNECTIONS".***
- ***When ordering parts, be sure to order according to the Part Number indicated in the Parts List.***

— SPEAKER —

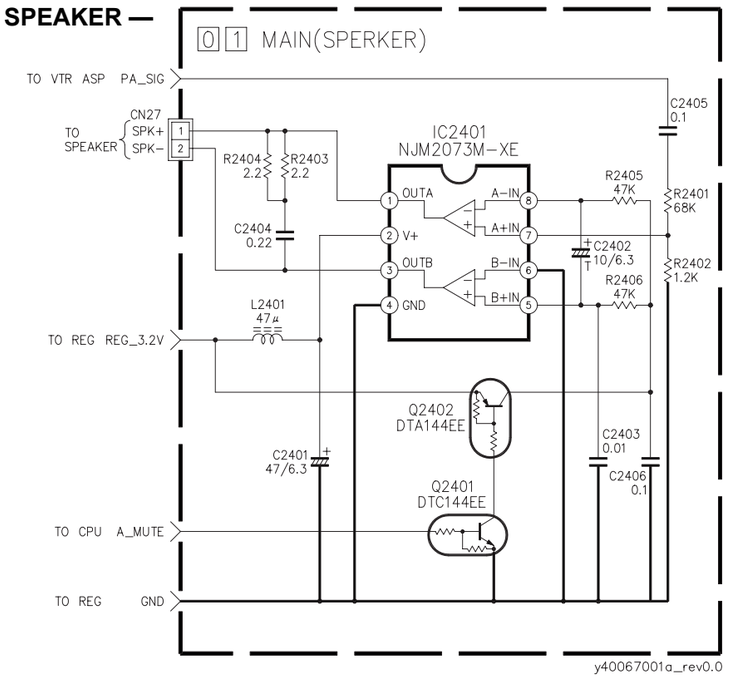

— MONITOR —

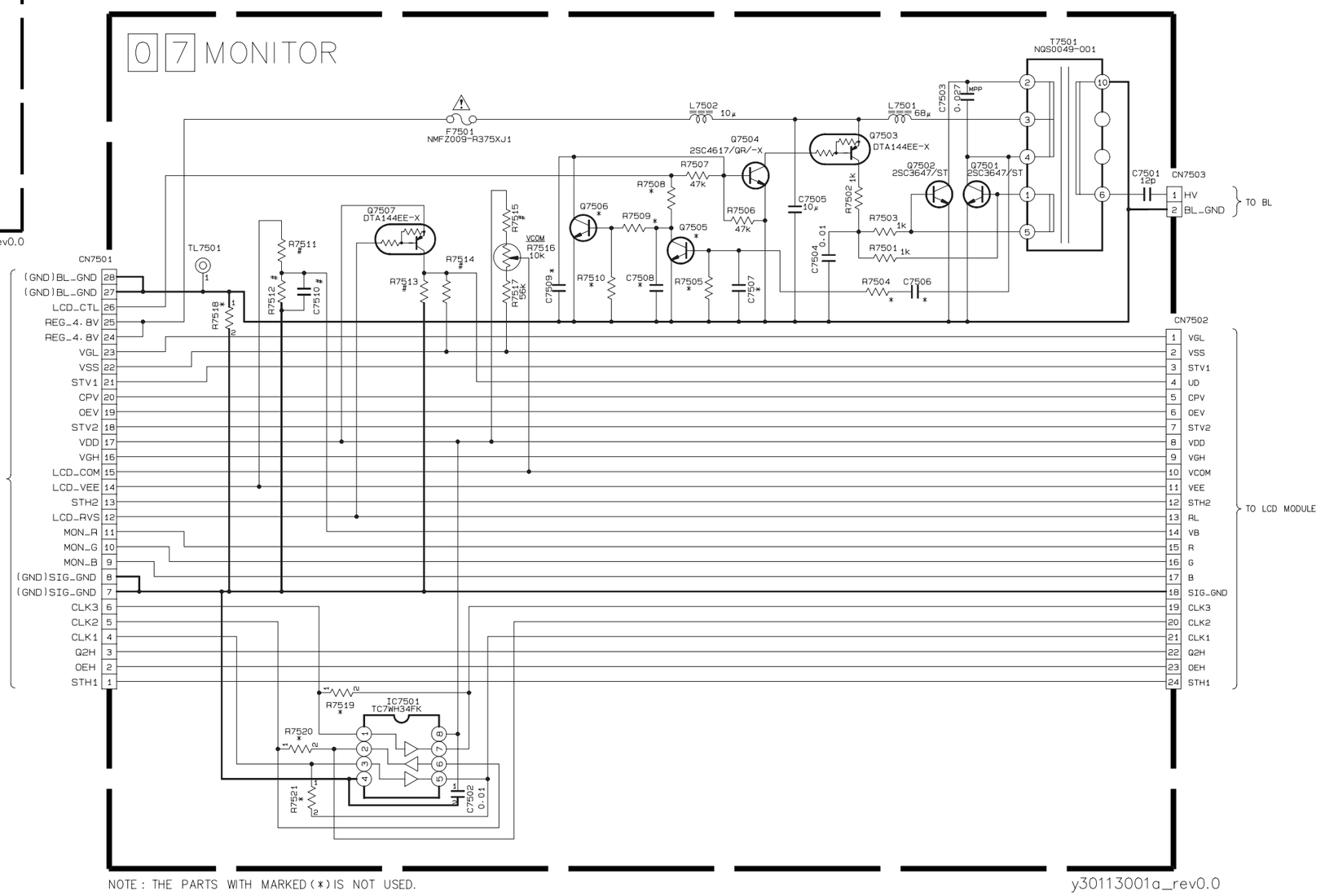

NOTE : THE PARTS WITH MARKED (*) IS NOT USED.

EXCHANGE_PARTS_LIST

	R7511	R7512	R7513	R7514	R7515	C7510
2.5inch	*	*	10k	*	3k	*
3inch	22k	22k	*	33k	5.6k	0.01

4.14 C-VF BL SENSOR SCHEMATIC DIAGRAM

— FOR SXM930 —

NOTES: ***● For the destination of each signal and further line connections that are cut off from this diagram, refer to "4.1 BOARD INTERCONNECTIONS".***
● When ordering parts, be sure to order according to the Part Number indicated in the Parts List.

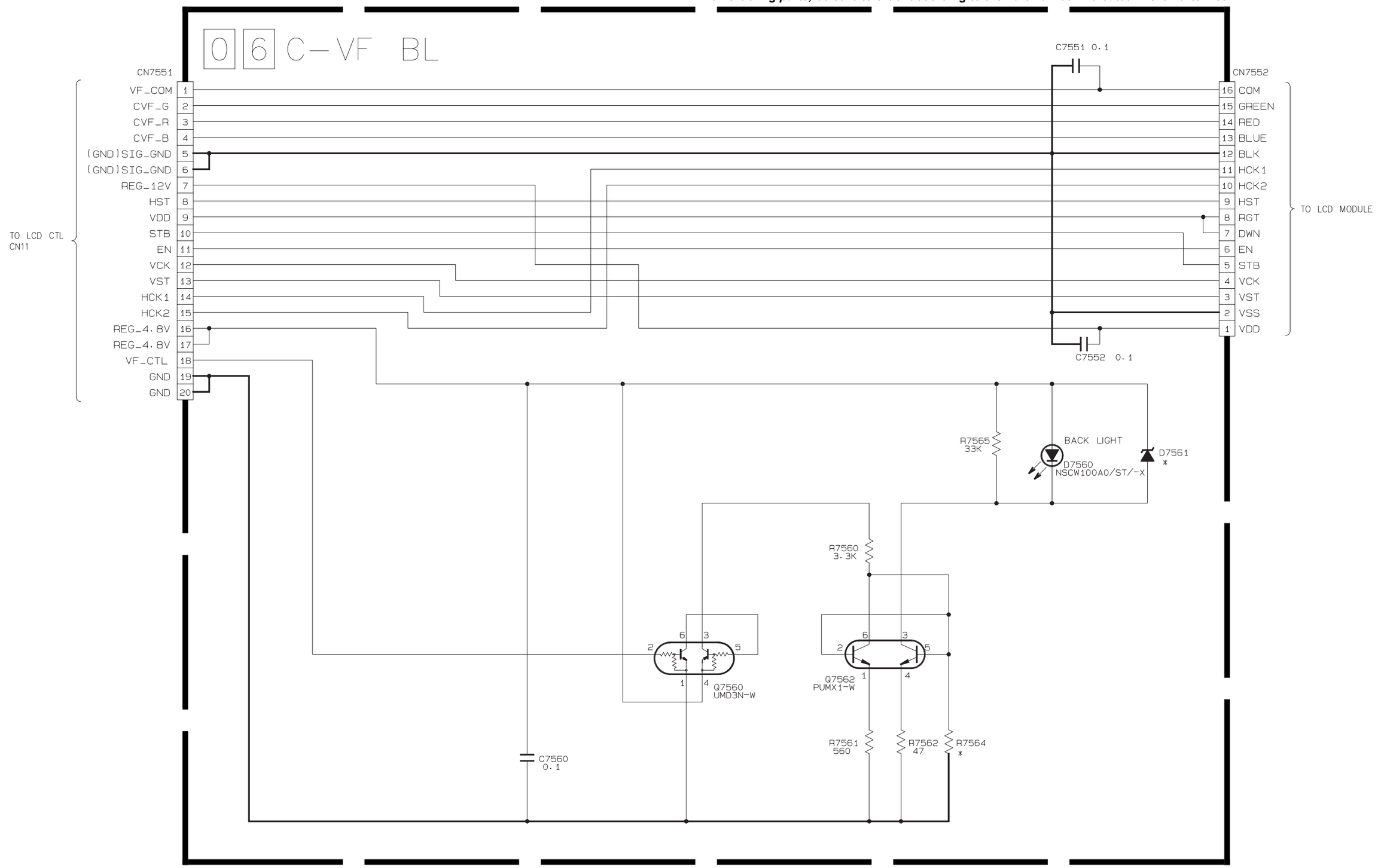

NOTE : THE PARTS WITH MARKED (*) IS NOT USED.

y30114-001a_rev0.0

4.15 DSC SCHEMATIC DIAGRAM

— FOR SXM930 —

NOTES: ***● For the destination of each signal and further line connections that are cut off from this diagram, refer to "4.1 BOARD INTERCONNECTIONS".***
● When ordering parts, be sure to order according to the Part Number indicated in the Parts List.

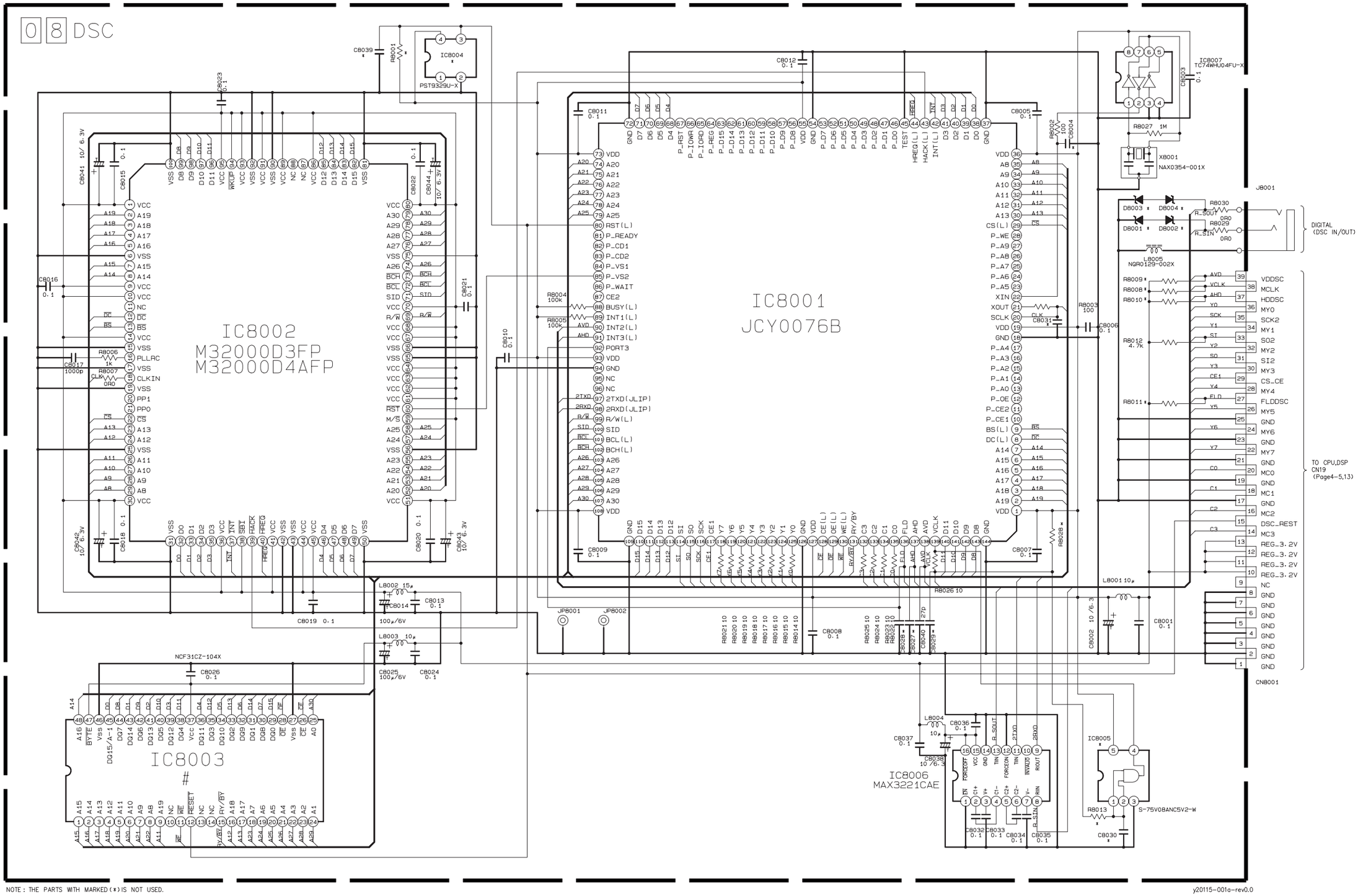

EXCHANGE-PARTS-LIST

MODEL	IC8003
PAL	TC58FVT16FT0/79
NTSC	MBV160T90PTA04

4.16 TOP OPE UNIT, ZOOM UNIT, REAR UNIT AND SENSOR SCHEMATIC DIAGRAMS

NOTES:
- ***For the destination of each signal and further line connections that are cut off from this diagram, refer to "4.1 BOARD INTERCONNECTIONS".***
- ***The schematic diagram is only for reference. Avoid replacing individual parts. Replace the entire unit only.***

— TOP OPE UNIT —

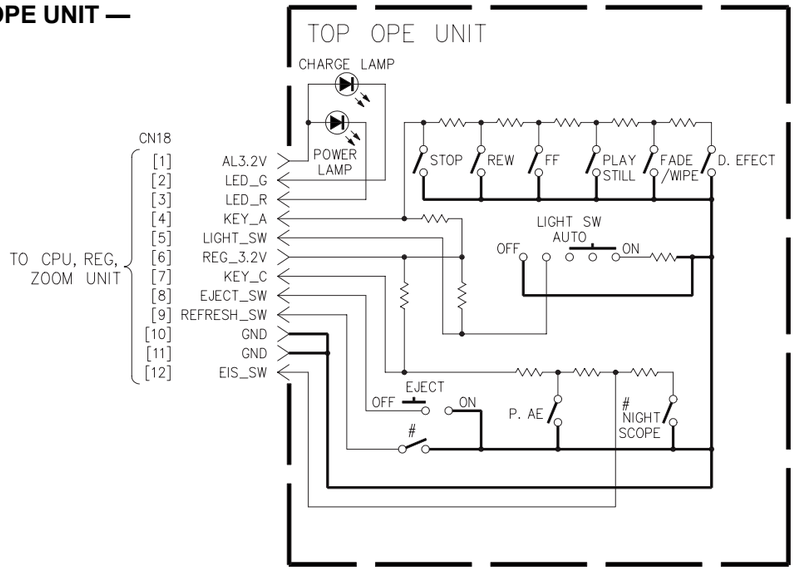

NOTE : COMPARISION CHART OF MODELS & MARKS (#).

FUNCTION \ MODELS	GR-AXM230	GR-SXM330	GR-SXM930
REFRESH/DSC	REFRESH	REFRESH	REFRESH/DSC
NIGHT SCOPE	NOT USED	USED	USED

— REAR UNIT —

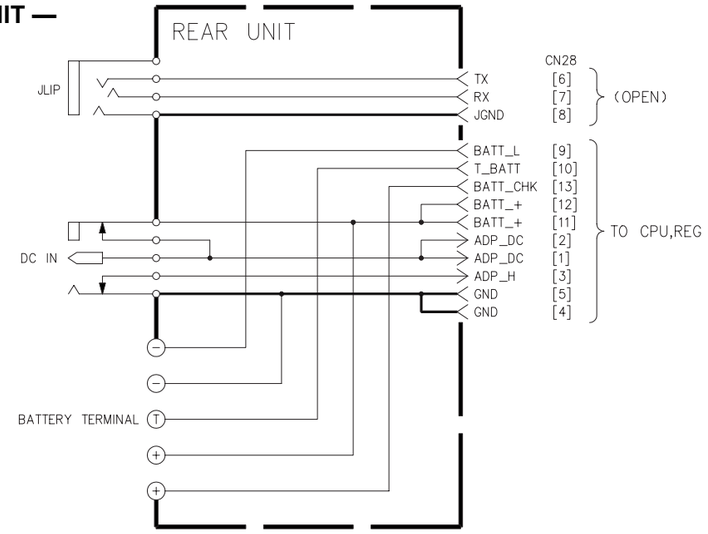

— ZOOM UNIT —

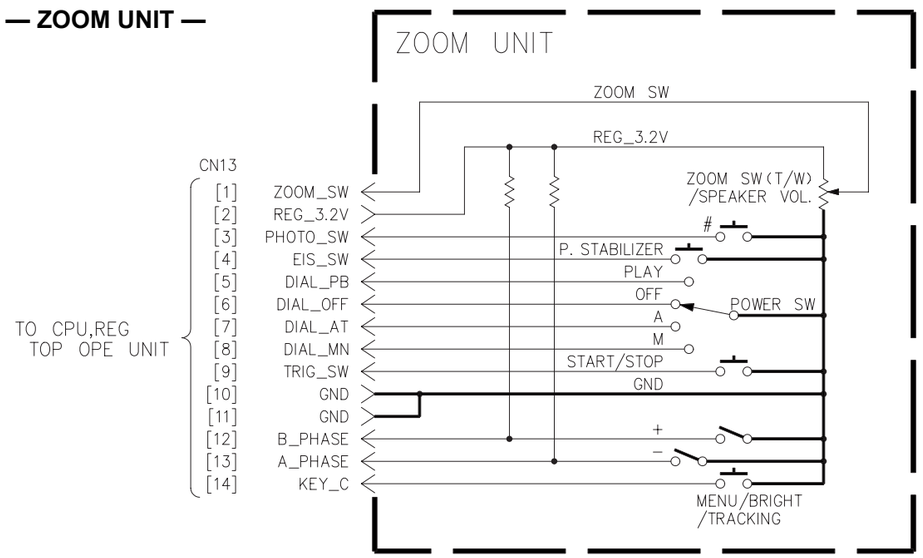

NOTE : COMPARISION CHART OF MODELS & MARKS (#).

MODELS	FUNCTION
GR-AXM230	5 SEC REC
GR-SXM330 GR-SXM930	SNAP SHOT

— SENSOR —

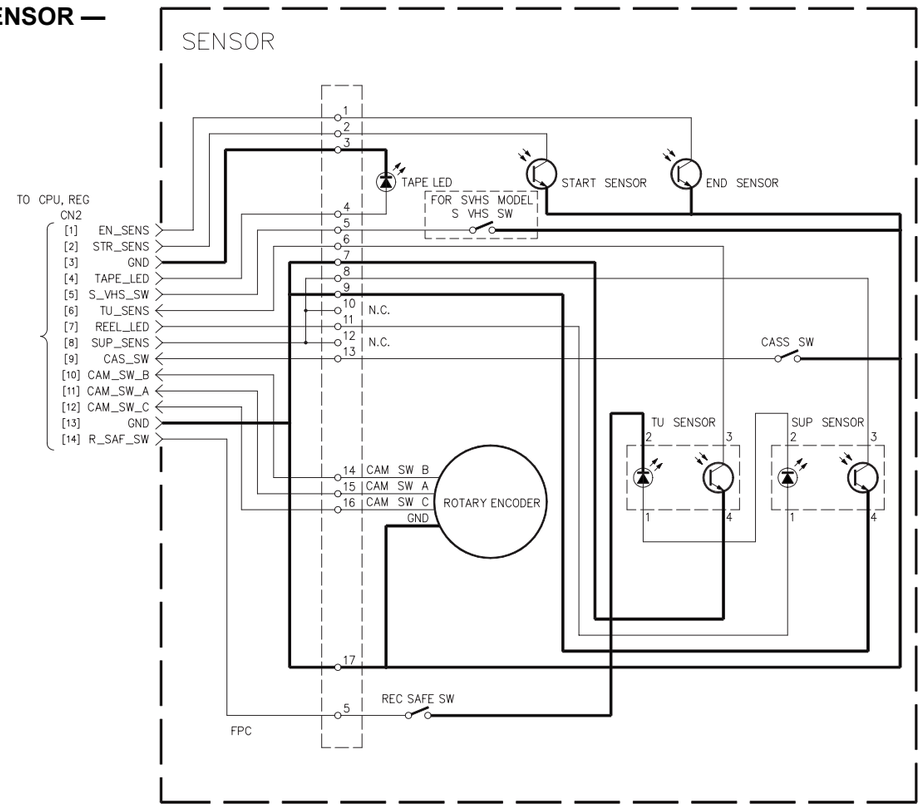

4.17 ELECTRONIC VIEWFINDER SCHEMATIC DIAGRAM

— FOR AXM230,SXM330 —

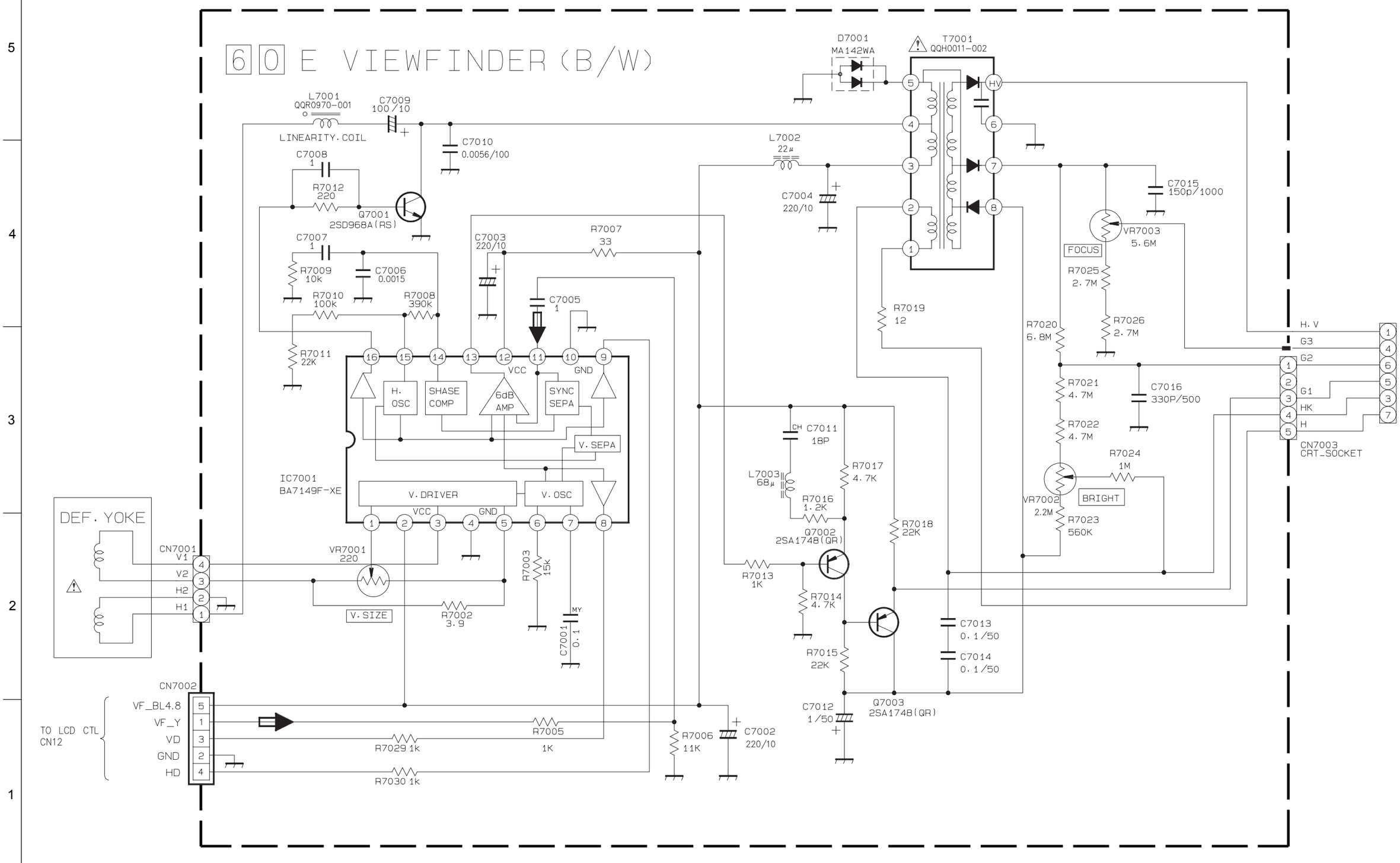

4.18 MAIN CIRCUIT BOARD

FOIL SIDE (B)

01 MAIN PWB
YB10310-01-01

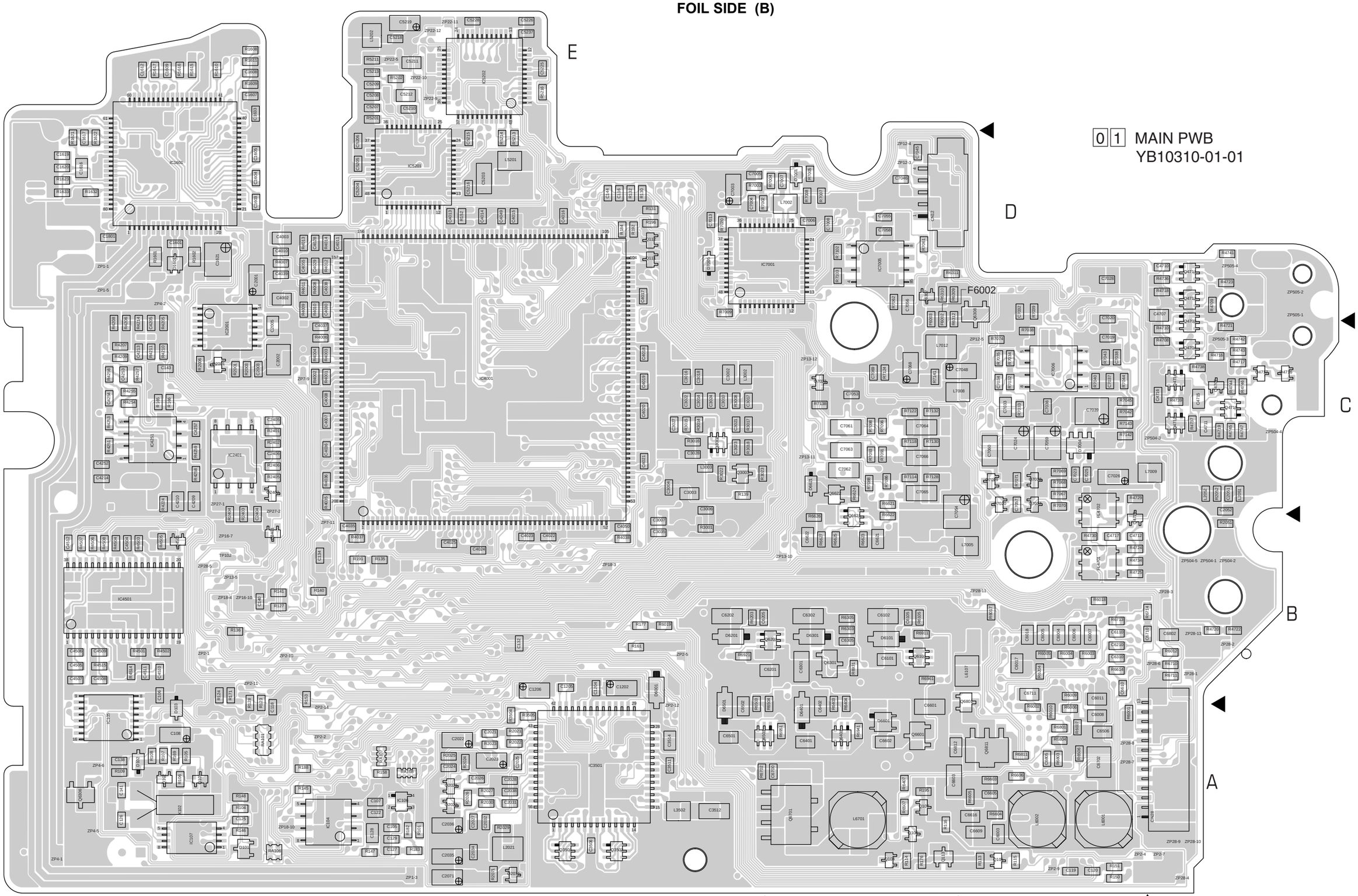

COMPONENT PARTS LOCATION GUIDE <MAIN > YB10310-01-01

REF.NO.	LOCATION
CAPACITOR	
C102	A C 5B
C103	A C 4B
C104	A C 5B
C105	B C 5A
C106	B C 7B
C107	B C 6A
C108	B C 7A
C109	A C 6B
C110	A C 6C
C111	A C 6A
C112	A C 6A
C113	A C 4D
C114	A C 4D
C115	A C 6B
C116	B C 4D
C118	B C 6A
C119	B C 2A
C120	B C 2A
C121	A C 6A
C122	B C 6A
C123	A C 6A
C124	A C 6A
C125	B C 6A
C126	B C 7A
C127	B C 5A
C128	B C 6A
C129	B C 5A
C131	A C 5A
C132	B C 5B
C133	A C 5B
C134	B C 6B
C135	A C 6B
C136	A C 2A
C137	A C 1A
C138	B C 7A
C140	B C 6B
C141	B C 7A
C143	B C 7C
C144	B C 4D
C146	A C 4D
C147	A C 4D
C1201	A C 4A
C1202	B C 4B
C1204	B C 4B
C1205	B C 5B
C1206	B C 5B
C1601	B C 7D
C1602	A C 7D
C1603	B C 6D
C1604	B C 6D
C1605	B C 6D
C1606	A C 7D
C1607	B C 6E
C1608	B C 6E
C1609	B C 7E
C1610	A C 7E
C1611	A C 7E
C1612	B C 7E
C1613	A C 7E
C1614	A C 7E
C1615	A C 7D
C1616	B C 7D
C1617	B C 7D
C1618	A C 7D
C1619	B C 7D
C1620	B C 7D
C1621	B C 6D
C1622	A C 7D
C1623	A C 7D
C1624	A C 7D
C1625	A C 7D
C1626	A C 7D
C1627	A C 7D
C1628	A C 7D
C1629	A C 7D
C1630	A C 7D
C1631	A C 6D
C1632	A C 6D
C1633	B C 6E
C1801	B C 7D
C2001	B C 6D
C2002	B C 6C
C2003	B C 6C
C2004	A C 6D
C2005	B C 6C
C2021	B C 5A
C2022	B C 5A
C2023	B C 5A
C2024	B C 5A
C2025	B C 5A
C2026	B C 5A
C2027	B C 5A
C2028	B C 5A
C2029	A C 5A
C2030	A C 5A
C2031	B C 5A
C2032	B C 5A
C2033	A C 4A
C2034	B C 5A
C2035	B C 5A
C2036	B C 5A
C2037	A C 6D
C2038	B C 5A
C2051	B C 1C
C2052	B C 1C
C2071	B C 5A
C2072	A C 5A
C2401	A C 6C
C2402	A C 6C
C2403	A C 6C
C2404	B C 6B
C2405	B C 6C
C2406	B C 6C
C3002	B C 4C
C3003	B C 4C
C3004	B C 4C
C3005	A C 3C
C3006	B C 4C
C3007	B C 4B
C3008	A C 5D
C3009	A C 4D
C3010	B C 4C
C3011	A C 3C
C3012	A C 3C
C3013	A C 3C
C3014	B C 4C
C3015	A C 3C
C3016	B C 4C
C3017	B C 4C
C3018	B C 4C
C3019	A C 3C
C3020	A C 3C
C3021	B C 4C
C3022	B C 4C
C3023	B C 4C
C3024	B C 4C
C3027	B C 4C
C3028	B C 4C
C3031	A C 4D
C3032	A C 4B
C3033	A C 4B
C3035	B C 4B
C3037	A C 4D
C3506	B C 4A
C3507	A C 4A
C3508	A C 4A
C3509	A C 5D
C3510	A C 4A
C3511	B C 4A
C3512	B C 4A
C3513	A C 5A
C3514	B C 4A
C3515	A C 5A
C3516	A C 5B
C3901	A C 4A
C3902	A C 4A
C3903	A C 4A
C4001	A C 6C
C4002	B C 6D
C4003	B C 6D
C4006	A C 5C
C4007	B C 6C
C4008	B C 6C
C4009	A C 6C
C4010	B C 6D
C4011	B C 6D
C4012	A C 5D
C4013	B C 5D
C4014	B C 5D
C4015	B C 5D
C4016	B C 5D
C4017	B C 4D
C4018	B C 4C
C4019	B C 4C
C4020	B C 4C
C4021	B C 4C
C4022	B C 5B
C4023	B C 5B
C4024	B C 5B
C4025	B C 5B
C4026	A C 6C
C4028	B C 6D
C4029	B C 6D
C4030	B C 6D
C4035	B C 6B
C4036	B C 6C
C4037	B C 6C
C4038	B C 6D
C4039	B C 6D
C4040	A C 5C
C4044	A C 6C
C4048	A C 5C
C4049	B C 5D
C4050	B C 4B
C4051	A C 6C
C4055	B C 6D
C4201	A C 7B
C4202	A C 7B
C4203	A C 7C
C4204	A C 7C
C4205	B C 7C
C4206	A C 7C
C4207	A C 7C
C4208	A C 7C
C4209	B C 7C
C4210	B C 7C
C4211	A C 7C
C4212	A C 7C
C4213	B C 7C
C4214	B C 7C
C4251	A C 7B
C4252	B C 7C
C4253	B C 7C
C4254	B C 7C
C4255	A C 6C
C4256	A C 6C
C4257	B C 6C
C4501	A C 7B
C4503	A C 7B
C4504	B C 7B
C4505	B C 7B
C4506	B C 7B
C4507	B C 7B
C4508	B C 7B
C4509	B C 7B
C4510	B C 7B
C4511	B C 7B
C4512	B C 7B
C4701	A C 1C
C4702	A C 1C
C4703	A C 1C
C4704	A C 5C
C4705	A C 5D
C4706	A C 5D
C4707	B C 1D
C4708	A C 5C
C4709	A C 5C
C4710	B C 1D
C4711	B C 1C
C4712	B C 2B
C4713	A C 2C
C4714	A C 2B
C4715	B C 1C
C4716	B C 1C
C4717	B C 2B
C4718	A C 1C
C4719	A C 1C
C5203	B C 5D
C5204	B C 6D
C5205	B C 6D
C5206	B C 6D
C5207	B C 6E
C5208	B C 6E
C5209	B C 6E
C5210	B C 5E
C5211	B C 5E
C5212	B C 5E
C5213	B C 6E
C5214	A C 5D
C5215	B C 5D
C5216	B C 5D
C5218	B C 5E
C5219	B C 5E
C5221	A C 6E
C5222	A C 5D
C5223	A C 5E
C5225	B C 5E
C5226	B C 5E
C5227	A C 5E
C5228	B C 5E
C5229	A C 5E
C5230	A C 5E
C5231	A C 5E
C5232	A C 5E
C5233	A C 5E
C5234	A C 5E
C5235	A C 5E
C5236	A C 5E
C5237	B C 5E
C6001	A C 2A
C6002	A C 4B
C6003	B C 2A
C6004	B C 2B
C6005	B C 2B
C6006	B C 2B
C6007	B C 2B
C6008	B C 2A
C6009	A C 2A
C6010	A C 2A
C6011	B C 2B
C6012	A C 2A
C6013	A C 2A
C6014	A C 2A
C6015	A C 2A
C6016	A C 2A
C6017	B C 2B
C6018	B C 2B
C6019	A C 2B
C6101	B C 3B
C6102	B C 3B
C6105	B C 3B
C6106	A C 2B
C6107	A C 3B
C6108	A C 5C
C6110	B C 2B
C6201	B C 3B
C6202	B C 4B
C6203	A C 4B
C6205	B C 4B
C6210	B C 2B
C6301	B C 3B
C6302	B C 3B
C6303	A C 3B
C6305	B C 3B
C6306	A C 3B
C6307	A C 7A
C6308	A C 3C
C6310	B C 2B
C6401	B C 3A
C6402	B C 3A
C6403	A C 4A
C6406	A C 1B
C6410	A C 1A
C6501	B C 4A
C6502	B C 4A
C6503	A C 4B
C6506	B C 2A
C6510	A C 1A
C6601	B C 3A
C6602	B C 3A
C6603	B C 3A
C6605	B C 2A
C6606	A C 3A
C6607	A C 3A
C6609	B C 2A
C6610	B C 2B
C6616	B C 2A
C6621	B C 3B
C6622	B C 3B
C6700	B C 3A
C6701	A C 3A
C6702	B C 2A
C6705	A C 2A
C6710	B C 2B
C6711	B C 2B
C6802	B C 1B
C6805	B C 2A
C6810	A C 2B
C6812	B C 3A
C6815	A C 2A
C6820	A C 2B
C7001	A C 3D
C7002	A C 4D
C7003	B C 4D
C7004	B C 4D
C7005	B C 4D
C7006	B C 3D
C7007	B C 3D
C7008	A C 5C
C7009	A C 3D
C7010	A C 2C
C7012	A C 3D
C7013	B C 4D
C7015	A C 3D
C7016	A C 3D
C7017	A C 4D
C7018	A C 3D
C7019	B C 2C
C7020	B C 2D
C7021	A C 3D
C7022	A C 3D
C7023	B C 2C
C7024	B C 2C
C7025	B C 2C
C7026	B C 2C
C7028	B C 2D
C7029	A C 2C
C7030	A C 2C
C7031	A C 2C
C7032	B C 2D
C7033	B C 2C
C7034	B C 2C
C7035	A C 2C
C7036	B C 2C
C7037	B C 2C
C7038	B C 2C
C7039	B C 2C
C7042	A C 2C
C7045	B C 3D
C7046	B C 3D
C7047	A C 3D
C7048	B C 2C
C7051	A C 2C
C7052	A C 2C
C7053	B C 3C
C7054	B C 3C
C7055	B C 3D
C7056	B C 3D
C7057	B C 2C
C7058	B C 3D
C7059	B C 2C
C7060	B C 2C
C7061	B C 3C
C7062	B C 3C
C7063	B C 3C
C7064	B C 3C
C7065	B C 3C
C7066	B C 3C
C7067	A C 3C
C7068	B C 3C
C7069	B C 3C
CONECTOR	
CN1	A C 5A
CN2	A C 2A
CN3	A C 6E
CN4	A C 7A
CN5	A C 4A
CN7	A C 6D
CN8	A C 5A
CN11	A C 3D
CN12	B C 3D
CN13	A C 4D
CN15	A C 7B
CN16	A C 2D
CN18	A C 5D
CN19	A C 5B
CN22	A C 6E
CN25	A C 2A
CN27	A C 6C
CN28	B C 1A
DIODE	
D101	B C 6A
D102	B C 7A
D103	B C 7A
D105	A C 2A
D106	A C 1A
D107	A C 2A
D501	A C 1A
D502	A C 1A
D1601	B C 7D
D1602	A C 7E
D3001	A C 4B
D4001	A C 6B
D4002	A C 6B
D5201	A C 5E
D5202	A C 5D
D6001	B C 4B
D6101	B C 3B
D6106	A C 2B
D6201	B C 4B
D6301	B C 3B
D6401	B C 3A
D6501	B C 4A
D6601	A C 3A
D6616	A C 2A
D6621	B C 3C
D7001	B C 3D
D7002	A C 2C
D7004	B C 2C
D7005	B C 4D
D7006	A C 2D
FUSE	
F6001	A C 1A
F6002	B C 3D
F6003	B C 3D
IC	
IC101	A C 5B
IC102	A C 4B
IC104	B C 6A
IC105	B C 7A
IC106	B C 5A
IC107	B C 7A
IC1601	B C 7D
IC1801	A D 7D
IC2001	B C 6C
IC2401	B C 6C
IC3001	A C 4C
IC3002	A C 4B
IC3003	A C 4D
IC3501	B C 4A
IC4001	B C 5C
IC4002	A C 5C
IC4003	A C 6C
IC4201	A C 7C
IC4202	A C 7C
IC4251	B C 7C
IC4501	B C 7B
IC4702	A C 2B
IC5201	B C 5D
IC5202	B C 5E
IC6001	A C 2B
IC7001	B C 4D
IC7002	A C 2C
IC7005	B C 3D
IC7006	B C 2C
IC7007	A C 2C
IC7008	A C 3C
IC7009	A C 3D
COIL	
L101	A C 4B
L501	A C 1A
L1601	A C 6D
L1602	A C 7D
L2001	A C 6C
L2003	A C 6C
L2021	B C 5A
L2051	B C 1C
L2052	B C 1C
L2071	A C 5A
L2072	A C 5A
L2401	A C 6C
L3002	B C 4C
L3003	B C 4C
L3502	B C 4A
L3503	A C 4B
L4005	A C 5C
L4201	A C 7B
L4501	A C 7B
L4502	A C 7B
L4701	A C 6C
L4702	A C 1C
L5201	B C 5D
L5202	B C 6E
L5203	A C 5E
L6001	B C 2A
L6002	B C 2A
L6101	A C 3B
L6106	A C 2B
L6107	B C 2B
L6201	A C 4B
L6301	A C 3B
L6306	A C 3B
L6401	A C 3A
L6501	A C 4A
L6601	A C 3A
L6602	A C 2A
L6606	A C 3A
L6701	B C 3A
L7001	A C 3D
L7002	B C 3D
L7005	B C 2B
L7006	A C 3B
L7007	A C 3D
L7008	B C 2C
L7009	B C 1C
L7010	A C 2C
L7012	B C 3C
TRANSISTOR	
Q101	B C 6A
Q102	B C 7A
Q103	A C 6B
Q104	B C 3A
Q105	B C 2A
Q106	B C 3A
Q107	B C 3A
Q110	A C 7A
Q111	B C 4D
Q112	B C 4D
Q113	B C 3A
Q2001	B C 6C
Q2007	A C 6D
Q2008	A C 6D
Q2021	B C 5A
Q2022	B C 5A
Q2023	A C 4A
Q2071	B C 5A
Q2401	B C 6B
Q2402	B C 6C
Q3002	B C 4C
Q3003	B C 4C
Q3006	A C 4B
Q3501	B C 5A
Q3502	B C 4A
Q3505	A C 4A
Q3901	A C 4A
Q4201	A C 6C
Q4251	A D 7D
Q4501	B C 7B
Q4701	A C 5D
Q4702	A C 6C
Q4703	B C 1C
Q4704	B C 1C
Q4705	A C 5C
Q4706	A C 6C
Q4707	B C 3C
Q4708	A C 3C
Q4709	A C 3C
Q4710	B C 2B
Q4711	B C 2B
Q4712	B C 1D
Q4713	B C 1C
Q4715	B C 1C
Q4716	B C 1C
Q4717	B C 1C
Q6101	B C 3B
Q6106	A C 5C
Q6107	A C 5C
Q6201	B C 3B
Q6301	B C 3B
Q6306	B C 7A
Q6307	B C 3D
Q6308	B C 2D
Q6401	B C 3A
Q6501	B C 4A
Q6601	B C 3A
Q6606	A C 3A
Q6607	A C 3A
Q6608	A C 2A
Q6621	B C 3B
Q6622	B C 3C
Q6701	B C 3A
Q6702	A C 3A
Q6801	B C 2B
Q6811	B C 2A
Q7001	A C 3C
Q7003	A C 3C
Q7005	A C 3C
Q7007	A C 3D
Q7011	A C 3C
Q7013	A C 3C
Q7015	A C 3C
Q7017	B C 2C
Q7018	B C 2C
Q7019	B C 2C
Q7020	B C 2C
Q7022	A C 2C
Q7023	B C 3C
RESISTOR	
R101	B C 5A
R102	A C 5B
R104	B C 6A
R105	B C 7A
R106	B C 7A
R107	B C 7A
R108	B C 7A
R109	B C 7A
R110	A C 6B
R111	A C 6B
R112	A C 6C
R113	B C 2A
R114	B C 3A
R115	B C 2A
R116	B C 3A
R118	A C 2A
R119	A C 2A
R120	A C 1A
R121	A C 1A
R122	A C 7D
R123	B C 6A
R124	B C 6B
R125	A C 7D
R126	A C 7D
R127	B C 6B
R128	B C 6A
R129	A C 6B
R130	B C 4D
R131	B C 4D
R132	B C 4D
R133	A C 6B
R134	A C 4D
R135	B C 6B
R136	B C 6B
R137	A C 6B
R138	A C 7A
R139	B C 4C
R140	B C 6B
R141	B C 6B
R142	A C 2A
R143	A C 6A
R144	A C 6A
R145	B C 6A
R146	B C 6A
R147	B C 6A

COMPONENT PARTS LOCATION GUIDE

REF.NO.	LOCATION	REF.NO.	LOCATION	REF.NO.	LOCATION	REF.NO.	LOCATION	REF.NO.	LOCATION	REF.NO.	LOCATION	REF.NO.	LOCATION	REF.NO.	LOCATION
R148	B C 6A	R2072	A C 5A	R4507	B C 7B	R6309	B C 3D	R7055	A C 2C	J4001	A C 4B	ZP28-10	B C 1A		
R149	A C 5B	R2401	B C 6C	R4508	B C 7B	R6310	B C 3D	R7056	A C 2C	J4002	A C 4B	ZP28-11	B C 2B		
R150	B C 2A	R2402	B C 6C	R4514	B C 7B	R6311	B C 3D	R7057	A C 2C	JP2001	A C 6D	ZP28-12	A C 1A		
R151	B C 2A	R2403	B C 6B	R4515	B C 7B	R6312	B C 3D	R7058	A C 2C	JP2002	A C 6C	ZP28-13	B C 1B		
R152	B C 5D	R2404	B C 6B	R4701	A C 5D	R6403	B C 3A	R7061	B C 3D	JP2003	A C 4A	ZP504-1	B C 1B		
R153	B C 6B	R2405	B C 6C	R4702	A C 6D	R6404	B C 3A	R7062	B C 3D	JP2004	A C 5A	ZP504-2	B C 1B		
R158	B C 6A	R2406	B C 6C	R4703	A C 6D	R6406	A C 1B	R7067	B C 2C	JP2005	A C 6D	ZP504-3	B C 1C		
R159	A C 2C	R3001	B C 4B	R4704	A C 5D	R6407	B C 3A	R7068	B C 2C	PC0539	A C 7A	ZP504-4	B C 1C		
R160	A C 4D	R3002	A C 3C	R4705	A C 5C	R6503	B C 4A	R7069	B C 2C	PC0559	A C 7A	ZP504-5	B C 1B		
R161	B C 4B	R3004	A C 3C	R4706	A C 5C	R6504	B C 3A	R7070	B C 2C	TL1601	A C 7D	ZP505-1	B C 1D		
R162	A C 6A	R3006	A C 3C	R4707	A C 5D	R6506	B C 2A	R7071	B C 2C	TL1602	A C 7D	ZP505-2	B C 1D		
R163	A C 4D	R3007	A C 3C	R4708	B C 1C	R6507	B C 3A	R7072	A C 2C	TL1603	A C 7D	ZP505-3	B C 1C		
R164	A C 5B	R3008	B C 4C	R4709	B C 1D	R6603	B C 2A	R7073	A C 2C	TL1605	A C 7D	ZP505-4	B C 1D		
R165	B C 7C	R3009	A C 6A	R4710	B C 1C	R6604	B C 2A	R7074	B C 2C	TL1606	A C 7E				
R166	B C 7C	R3010	A C 6A	R4711	A C 5D	R6605	B C 2A	R7077	A C 3D	TM6	B C 1A				
R167	A C 7A	R3014	B C 4C	R4712	A C 5C	R6606	B C 2A	R7078	A C 3D	TM7	B C 1A				
R168	A C 7A	R3015	B C 4C	R4713	A C 5C	R6607	A C 3A	R7079	A C 3D	TM9	B C 7A				
R169	B C 7A	R3016	B C 4C	R4714	A C 5D	R6608	A C 3A	R7080	A C 3D	X101	A C 6A				
R170	A C 7A	R3017	B C 4C	R4715	A C 2D	R6609	A C 3A	R7081	A C 3D	X102	B C 7A				
R171	B C 6B	R3018	B C 4C	R4716	B C 1C	R6610	A C 3A	R7082	A C 3D	X3001	A D 4B				
R172	A C 4D	R3022	B C 4C	R4717	B C 1C	R6611	A C 3A	R7083	A C 3C	ZP1-1	B C 7D				
R173	A C 5B	R3023	B C 4C	R4718	B C 1D	R6612	A C 3A	R7084	A C 3C	ZP1-3	B C 5A				
R174	A C 5B	R3027	A C 5B	R4719	B C 1C	R6613	A C 2A	R7085	A C 3C	ZP1-5	B C 7D				
R175	A C 5B	R3028	A C 4B	R4720	B C 1B	R6614	B C 2B	R7086	B C 3C	ZP1-7	A C 7A				
R176	B C 3A	R3029	A C 4D	R4721	B C 1C	R6616	A C 3A	R7088	B C 3C	ZP1-8	A C 7A				
R177	B C 4B	R3030	A C 4D	R4722	B C 1B	R6621	B C 3C	R7089	A C 3C	ZP1-9	A C 7A				
R180	A C 5B	R3031	A C 4D	R4723	B C 1D	R6622	B C 3B	R7090	A C 3C	ZP2-1	B C 6B				
R182	B C 5A	R3034	A C 4D	R4724	B C 2B	R6623	B C 3B	R7091	B C 3C	ZP2-2	B C 6A				
R183	B C 5A	R3038	A C 3C	R4725	B C 2B	R6624	B C 3C	R7093	B C 3C	ZP2-4	B C 2A				
R184	B C 4D	R3501	A C 5D	R4726	A C 2B	R6625	B C 3B	R7094	A C 3C	ZP2-5	B C 4B				
R188	B C 6A	R3502	A C 4A	R4727	A C 1C	R6626	B C 3B	R7095	A C 3C	ZP2-6	A C 1A				
R189	A C 4B	R3504	B C 5A	R4728	A C 2B	R6627	B C 3B	R7096	B C 3C	ZP2-7	B C 1A				
R190	A C 6B	R3505	B C 5A	R4729	B C 2C	R6701	A C 3A	R7098	B C 3C	ZP2-8	A C 1A				
R191	B C 6B	R3506	A C 5A	R4730	B C 2B	R6702	B C 4A	R7099	A C 3D	ZP2-9	B C 2A				
R192	B C 4D	R3507	A C 4B	R4731	A C 2B	R6703	A C 2A	R7100	A C 3D	ZP4-1	B C 7A				
R193	A C 5B	R3508	A C 4A	R4732	A C 1B	R6704	A C 2A	R7101	A C 3D	ZP4-2	B C 7D				
R194	A C 5B	R3901	A C 4A	R4733	A C 2C	R6706	A C 2A	R7102	B C 3D	ZP4-5	B C 7A				
R195	B C 3A	R3902	A C 4A	R4734	B C 2B	R6707	A C 3A	R7103	B C 3D	ZP4-6	B C 7A				
R196	B C 4D	R3903	A C 4A	R4735	A C 1D	R6708	A C 3A	R7105	A C 2D	ZP7-1	A C 5D				
R504	A C 1A	R4001	B C 6C	R4736	B C 1D	R6709	A C 3A	R7106	A C 2D	ZP7-2	A C 5D				
R505	A C 1A	R4002	B C 6C	R4737	B C 1C	R6710	B C 1B	R7107	A C 2D	ZP7-3	A C 6C				
R1601	B C 7D	R4003	B C 6C	R4738	B C 1C	R6711	B C 1B	R7110	A C 3C	ZP7-4	A C 6D				
R1602	B C 7D	R4004	B C 6C	R4739	B C 1C	R6712	A C 3A	R7111	A C 3C	ZP7-5	A C 6C				
R1603	A C 7D	R4006	B C 6C	R4741	B C 1D	R6713	B C 2B	R7112	A C 3C	ZP7-6	A C 6C				
R1604	A C 7D	R4007	B C 6D	R4742	B C 1C	R6714	B C 2B	R7114	B C 3C	ZP7-7	A C 6C				
R1605	A C 7E	R4008	B C 6D	R4743	B C 1C	R6801	B C 2A	R7115	A C 3C	ZP7-8	A C 6D				
R1606	A C 7E	R4009	B C 6D	R4744	B C 1C	R6803	B C 2A	R7116	A C 3C	ZP7-9	B C 6C				
R1607	A C 7D	R4010	B C 6D	R4745	B C 1C	R6804	B C 2A	R7118	B C 3C	ZP8-1	A C 6A				
R1608	B C 6E	R4011	B C 6D	R4746	B C 1C	R6810	A C 2B	R7119	A C 3C	ZP8-2	A C 5A				
R1609	B C 6E	R4012	B C 6D	R4747	B C 1C	R6811	B C 2A	R7120	A C 3C	ZP1-10	A C 7A				
R1610	B C 6E	R4013	B C 6D	R4748	A C 6C	R6813	A C 2A	R7122	B C 3C	ZP12-1	A C 3C				
R1611	B C 6E	R4014	B C 6D	R5201	B C 6E	R6814	A C 2A	R7123	A C 3C	ZP12-3	B C 3D				
R1612	A C 7D	R4035	B C 6C	R5202	B C 5E	R6820	A C 2B	R7124	B C 3C	ZP12-4	B C 3D				
R1613	A C 7E	R4036	B C 6C	R5203	A C 3C	R6911	B C 3B	R7127	A C 3C	ZP12-5	B C 2C				
R1614	A C 7E	R4037	B C 6B	R5204	A C 3B	R6921	B C 4B	R7128	B C 3C	ZP13-5	B C 6B				
R1615	B C 7E	R4038	B C 4B	R5211	B C 6E	R6931	B C 3B	R7129	A C 3C	ZP16-7	B C 6B				
R1616	B C 7E	R4201	A C 7C	R5212	A C 5E	R6941	B C 3A	R7130	B C 3C	ZP18-3	B C 4B				
R1617	B C 7E	R4202	A C 7C	R5213	B C 5D	R6951	B C 3A	R7131	A C 3C	ZP18-4	B C 6B				
R1618	A C 7D	R4203	A C 7C	R5214	B C 5D	R6961	B C 3B	R7132	B C 3C	ZP2-10	B C 6B				
R1619	A C 7E	R4204	A C 7C	R5215	A C 5D	R7002	B C 4D	R7137	A C 3C	ZP2-11	B C 6B				
R1620	A C 7D	R4205	B C 7C	R5216	B C 5E	R7003	B C 4D	R7138	B C 3C	ZP2-12	B C 4A				
R1621	B C 7D	R4206	B C 7C	R5217	A C 5E	R7004	B C 3D	R7139	A C 3C	ZP2-14	B C 6A				
R1622	B C 7D	R4207	B C 7C	R5218	A C 5E	R7005	B C 3D	R7141	B C 3C	ZP22-1	A C 5E				
R1623	B C 7D	R4208	B C 7C	R5220	A C 5E	R7007	B C 3D	R7142	B C 2C	ZP22-2	A C 5E				
R1624	A C 7D	R4209	B C 7C	R6001	B C 2A	R7008	B C 3D	R7143	B C 2C	ZP22-3	A C 5D				
R1625	A C 7D	R4210	B C 7C	R6002	B C 2A	R7009	B C 4D	RA101	B C 6A	ZP22-4	A C 5E				
R1626	A C 7D	R4211	B C 7C	R6003	B C 2B	R7010	A C 3D	RA102	A C 6B	ZP22-5	B C 5E				
R1627	A C 7D	R4212	A C 7C	R6004	B C 2B	R7011	A C 3D	RA103	A C 6B	ZP22-8	A C 5E				
R1628	A C 7D	R4213	A C 7C	R6005	B C 2B	R7012	A C 4D	RA104	A C 6B	ZP22-9	B C 5E				
R1629	A C 7D	R4214	B C 7C	R6006	B C 2A	R7013	A C 3D	RA105	A C 6B	ZP25-5	A C 1B				
R1630	A C 7D	R4215	A C 7C	R6007	B C 2A	R7014	A C 3D	RA106	B C 6A	ZP27-1	B C 6C				
R1631	A C 7D	R4216	A C 7C	R6008	A C 2A	R7015	A C 3D	RA107	B C 6A	ZP27-2	B C 6B				
R1632	B C 7D	R4217	A C 7C	R6009	B C 2B	R7020	B C 4D	RA108	B C 5A	ZP28-1	B C 1B				
R1633	B C 7D	R4218	A C 7C	R6010	B C 2A	R7021	A C 2C	RA109	A C 4D	ZP28-2	B C 1B				
R2001	B C 6C	R4219	A C 7C	R6011	A C 2B	R7022	A C 2C	RA4001	A C 5C	ZP28-3	B C 1B				
R2002	A C 6D	R4220	A C 7C	R6012	B C 1B	R7023	A C 2C	RA4002	A C 5C	ZP28-4	B C 1A				
R2003	B C 6C	R4221	A C 7C	R6015	A C 1A	R7024	A C 2C	RA4003	A C 5C	ZP28-5	B C 6B				
R2004	A C 6D	R4222	A C 7C	R6016	A C 1A	R7029	A C 2C	**TEST POINT**		ZP28-6	B C 1B				
R2005	A C 5D	R4223	A C 7C	R6017	B C 2B	R7030	A C 2C			ZP28-7	B C 2A				
R2006	B C 6C	R4224	B C 7C	R6018	B C 2B	R7031	A C 2C	TP101	A C 5B	ZP28-8	B C 2A				
R2011	A C 5D	R4251	B C 7C	R6019	B C 4B	R7032	B C 2C	TP102	B C 6B	ZP28-9	B C 1A				
R2012	A C 5D	R4252	A C 7C	R6103	A C 5C	R7033	B C 2C	TP7001	A C 3C	ZP7-10	A C 6C				
R2021	B C 5A	R4253	B C 7C	R6104	A C 3A	R7034	B C 2C	TP7002	A C 3C	ZP7-11	B C 6B				
R2022	B C 5A	R4254	B C 7C	R6105	B C 3B	R7035	B C 2C	TP7003	A C 2C	ZP101-1	A C 6A				
R2023	B C 5A	R4255	B C 7C	R6106	A C 5C	R7038	B C 2C	TP7005	A C 2B	ZP11-14	A C 3D				
R2024	B C 5A	R4256	B C 7C	R6107	A C 5C	R7039	B C 2D	TP7007	A C 2C	ZP13-10	B C 3B				
R2025	B C 5A	R4257	B C 7C	R6108	A C 5C	R7040	B C 2C	TP7008	A C 2D	ZP13-11	B C 3C				
R2026	B C 5A	R4258	B C 6C	R6109	A C 6C	R7042	B C 2C	TP7009	A C 2C	ZP13-12	B C 3C				
R2027	B C 5A	R4259	B C 6C	R6110	A C 5C	R7043	B C 2C	TP7011	A C 2C	ZP16-10	B C 6B				
R2028	A C 4A	R4261	A C 6C	R6111	A C 5C	R7044	B C 2C	**OHTER**		ZP18-10	B C 6A				
R2029	B C 5A	R4262	A C 7D	R6203	B C 4B	R7045	B C 2C			ZP22-10	B C 5E				
R2030	B C 5A	R4501	B C 7B	R6204	B C 2B	R7046	A C 2C	CB1	A C 5B	ZP22-11	B C 5E				
R2031	A C 5A	R4502	B C 7B	R6303	B C 3B	R7049	A C 2C	FL4701	B C 2B	ZP22-12	B C 5E				
R2032	A C 6D	R4503	B C 7B	R6304	A C 3B	R7050	A C 2C	FL4702	B C 2C	ZP22-13	A C 5E				
R2051	B C 1B	R4504	B C 7B	R6305	B C 3B	R7051	A C 2C	J101	A D 7C	ZP22-14	A C 5E				
R2052	B C 1C	R4505	B C 7B	R6306	A C 7A	R7053	A C 2C	J504	A D 1C	ZP25-14	A C 4A				
R2071	B C 5A	R4506	B C 7B	R6307	A C 7A	R7054	A C 2C	J505	A D 1D						

COMPONENT SIDE (A)

01 MAIN PWB
YB10310-01-01

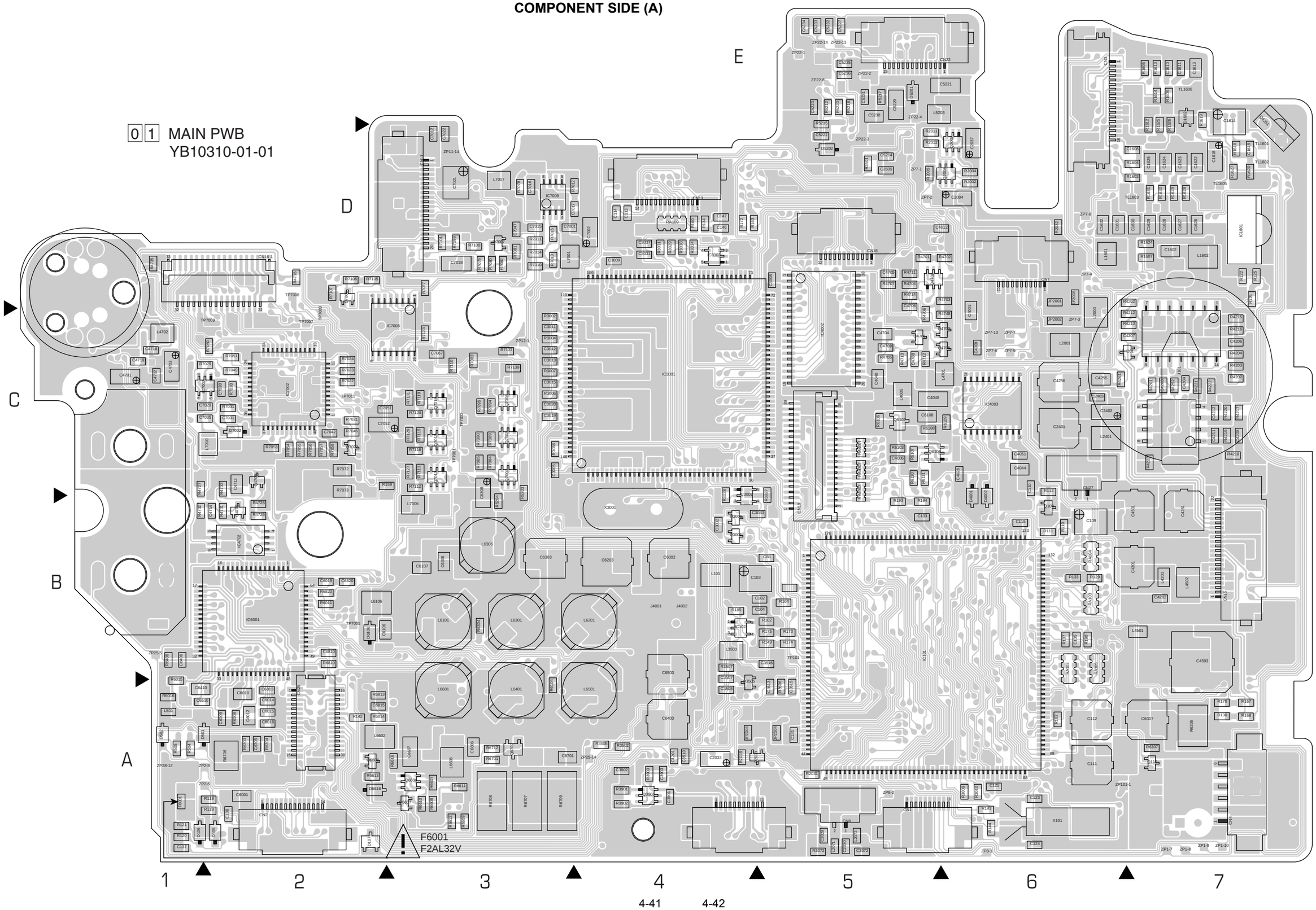

4.19 CCD AND C-VF BL CIRCUIT BOARDS

— CCD —

FOIL SIDE (B)

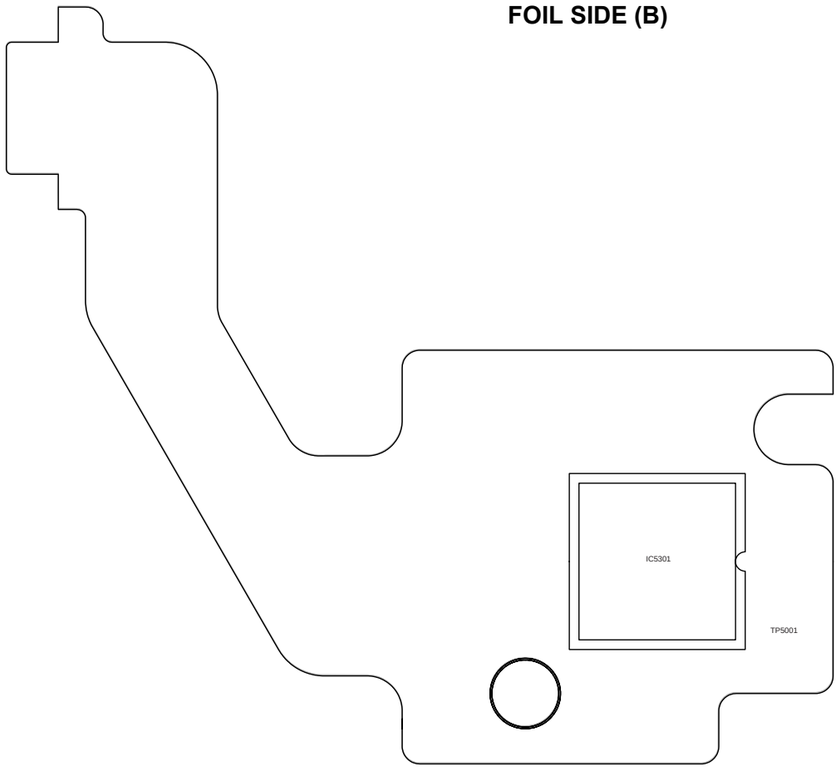

02 CCD PWB
YB20899-01-01

COMPONENT SIDE (A)

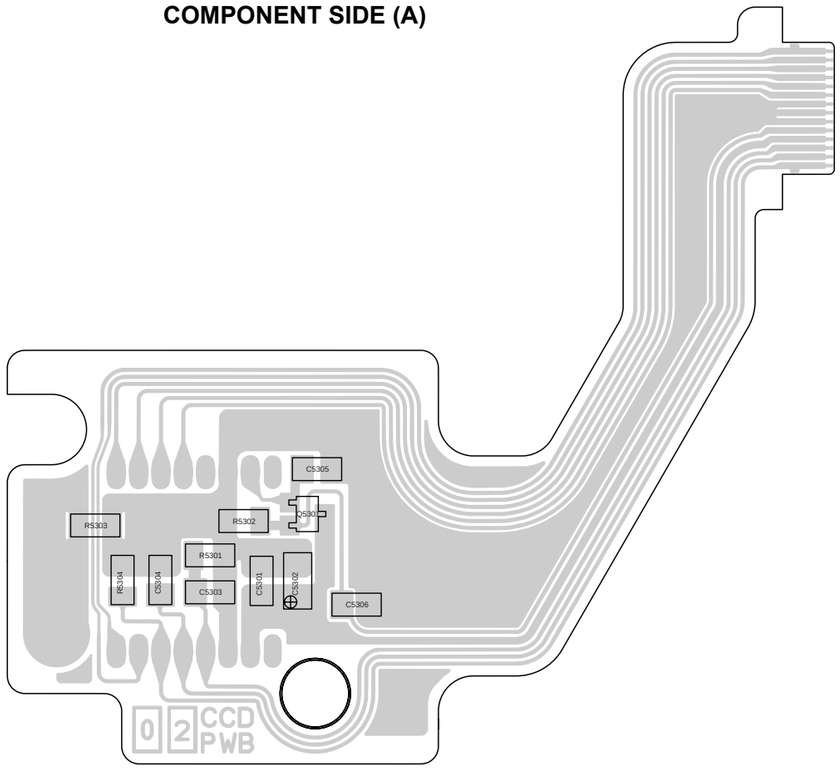

— C-VF BL —
(FOR SXM930)

FOIL SIDE (B)

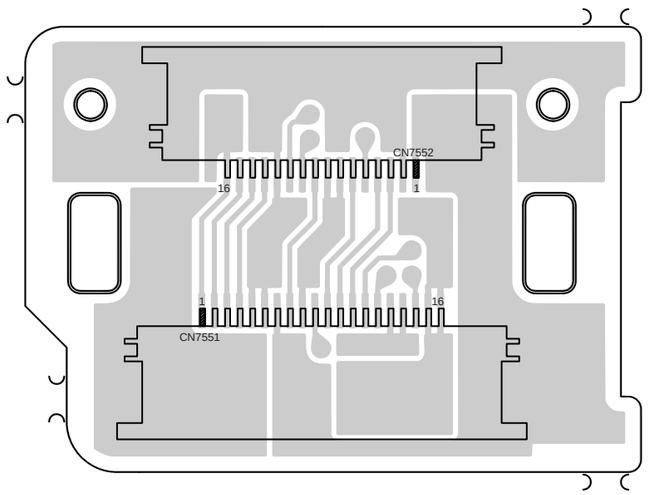

06 C-VF BL
YB20901

COMPONENT SIDE (A)

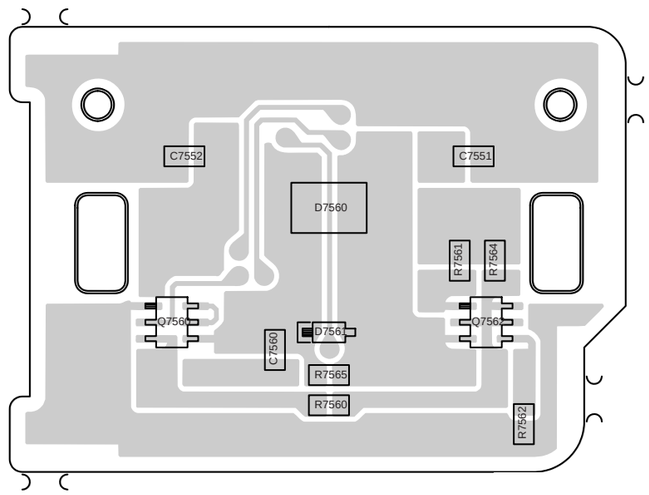

4.20 MONITOR CIRCUIT BOARD

FOIL SIDE (B)

07 MONITOR PWB
YB20900-01-01

COMPONENT SIDE (A)

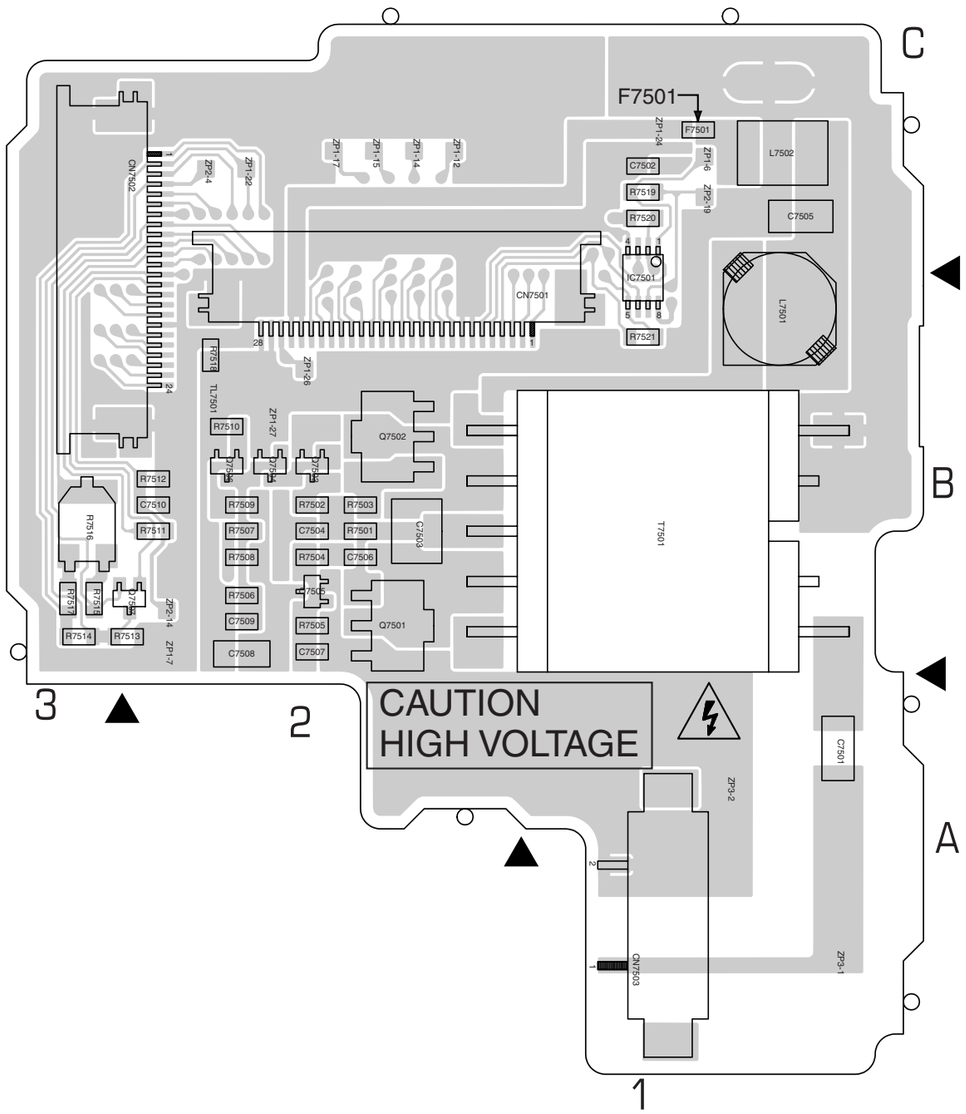

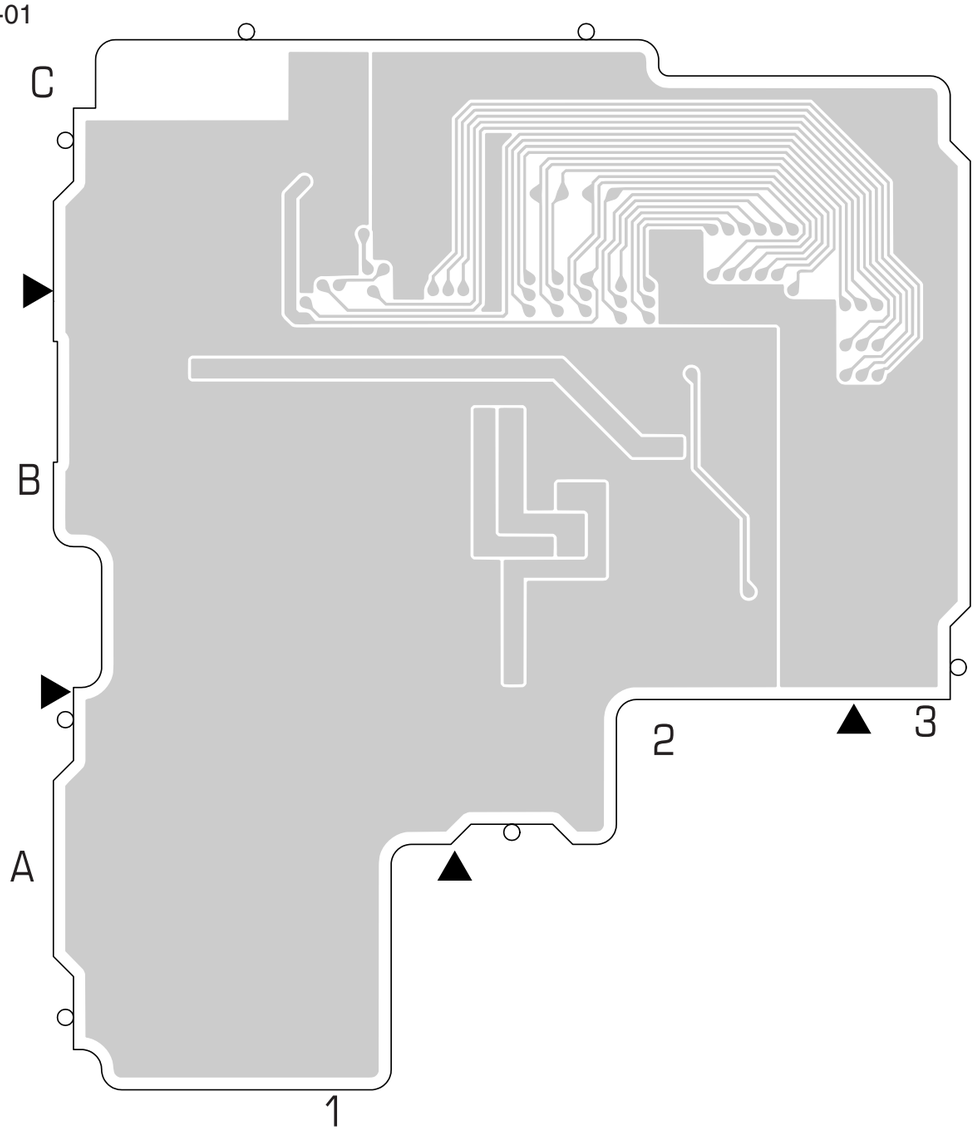

COMPONENT PARTS LOCATION GUIDE <MONITOR >

REF.NO.	LOCATION		
CAPACITOR			
C7501	A	C	1A
C7502	A	C	1C
C7503	A	C	2B
C7504	A	C	2B
C7505	A	C	1C
C7506	A	C	2B
C7507	A	C	2B
C7508	A	C	2B
C7509	A	C	2B
C7510	A	C	2B
CONECTOR			
CN7501	A	C	1B
CN7502	A	C	2C
CN7503	A	C	1A
FUSE			
F7501	A	C	1C

REF.NO.	LOCATION		
IC			
IC7501	A	C	1C
COIL			
L7501	A	C	1B
L7502	A	C	1C
TRANSISTOR			
Q7501	A	C	2B
Q7502	A	C	2B
Q7503	A	C	2B
Q7504	A	C	2B
Q7505	A	C	2B
Q7506	A	C	2B
Q7507	A	C	2B
RESISTOR			
R7501	A	C	2B
R7502	A	C	2B

REF.NO.	LOCATION		
R7503	A	C	2B
R7504	A	C	2B
R7505	A	C	2B
R7506	A	C	2B
R7507	A	C	2B
R7508	A	C	2B
R7509	A	C	2B
R7510	A	C	2B
R7511	A	C	2B
R7512	A	C	2B
R7513	A	C	2B
R7514	A	C	3B
R7515	A	C	3B
R7516	A	C	3B
R7517	A	C	3B
R7518	A	C	2B
R7519	A	C	1C
R7520	A	C	1C

REF.NO.	LOCATION		
R7521	A	C	1B
OTHER			
T7501	A	C	1B
TL7501	A	C	2B
ZP1-6	A	C	1C
ZP1-7	A	C	2B
ZP2-4	A	C	2C
ZP3-1	A	C	1A
ZP3-2	A	C	1A
ZP1-14	A	C	2C
ZP1-15	A	C	2C
ZP1-17	A	C	2C
ZP1-22	A	C	2C
ZP1-24	A	C	1C
ZP1-26	A	C	2B
ZP1-27	A	C	2B
ZP2-14	A	C	2B
ZP2-19	A	C	1C

4.21 DSC CIRCUIT BOARD

— FOR SXM930 —

FOIL SIDE (B)

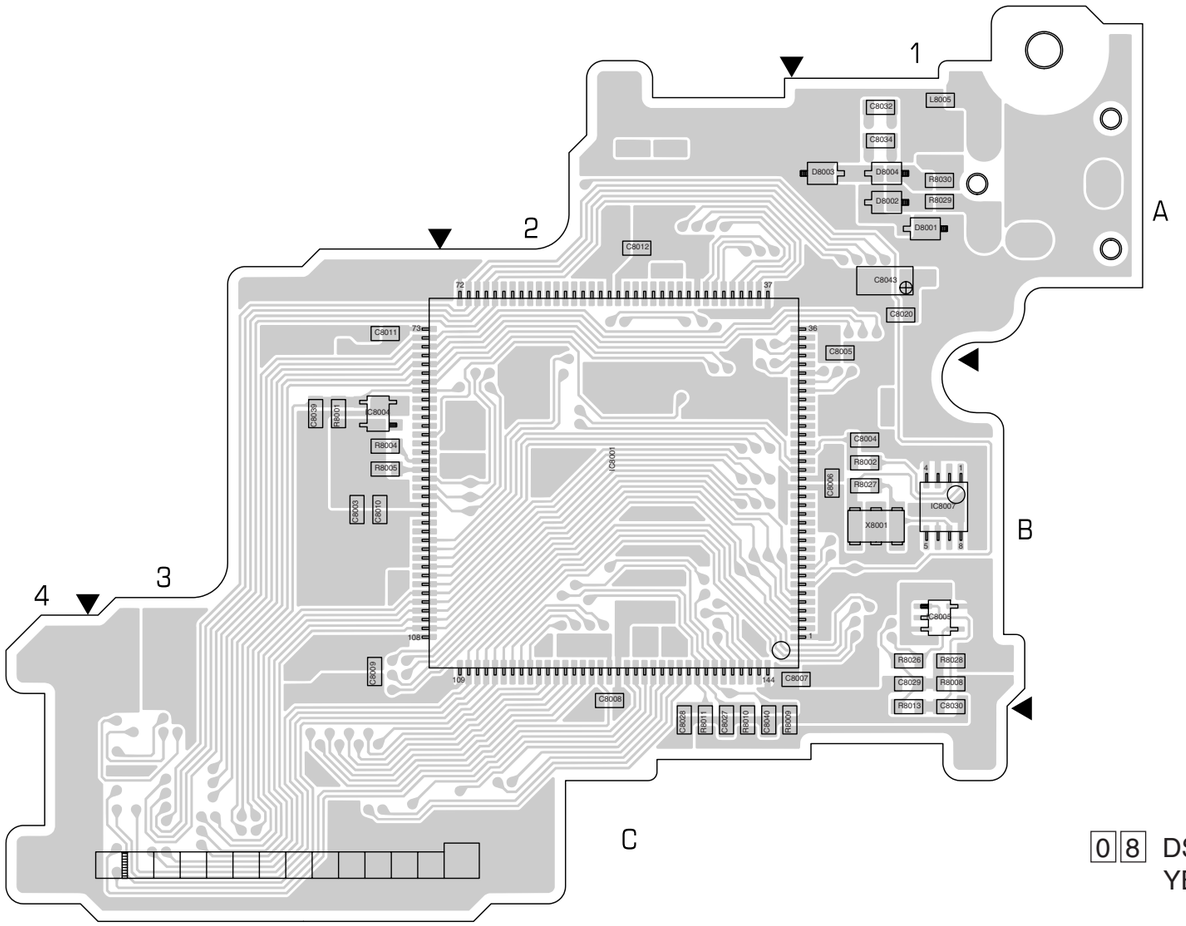

COMPONENT SIDE (A)

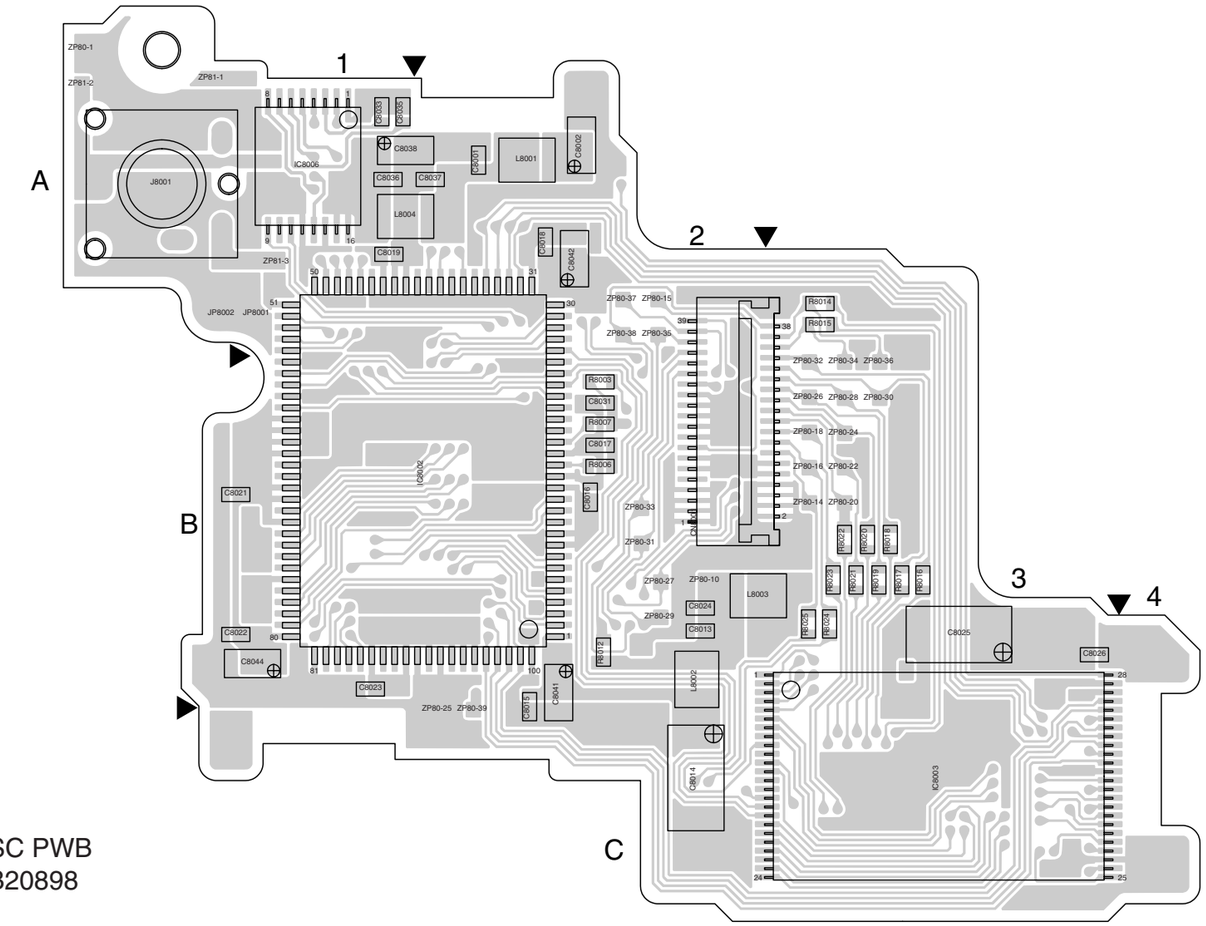

0 8 DSC PWB
YB20898

COMPONENT PARTS LOCATION GUIDE <DSC>

REF.NO.	LOCATION		
CAPACITOR			
C8001	A	C	2A
C8002	A	C	2A
C8003	B	C	3B
C8004	B	C	1B
C8005	B	C	1A
C8006	B	C	1B
C8007	B	C	1B
C8008	B	C	2B
C8009	B	C	3B
C8010	B	C	3B
C8011	B	C	3A
C8012	B	C	2A

REF.NO.	LOCATION		
C8013	A	C	2B
C8014	A	C	2C
C8015	A	C	2B
C8016	A	C	2B
C8017	A	C	2B
C8018	A	C	2A
C8019	A	C	1A
C8020	B	C	1A
C8021	A	C	1B
C8022	A	C	1B
C8023	A	C	1B
C8024	A	C	2B
C8025	A	C	3B
C8026	A	C	3B

REF.NO.	LOCATION		
C8027	B	C	2C
C8028	B	C	2C
C8029	B	C	1B
C8030	B	C	1B
C8031	A	C	2B
C8032	B	C	1A
C8033	A	C	1A
C8034	B	C	1A
C8035	A	C	1A
C8036	A	C	1A
C8037	A	C	2A
C8038	A	C	1A
C8039	B	C	3B
C8040	B	C	2C

REF.NO.	LOCATION		
C8041	A	C	2B
C8042	A	C	2A
C8043	B	C	1A
C8044	A	C	1B
CONECTOR			
CN8001	A	C	2B
DIODE			
D8001	B	C	1A
D8002	B	C	1A
D8003	B	C	1A
D8004	B	C	1A

REF.NO.	LOCATION		
IC			
IC8001	B	C	2B
IC8002	A	C	2B
IC8003	A	C	3C
IC8004	B	C	3B
IC8005	B	C	1B
IC8006	A	C	1A
IC8007	B	C	1B
COIL			
L8001	A	C	2A
L8002	A	C	2B
L8003	A	C	2B
L8004	A	C	1A

REF.NO.	LOCATION		
L8005	B	C	1A
RESISTOR			
R8001	B	C	3B
R8002	B	C	1B
R8003	A	C	2B
R8004	B	C	3B
R8005	B	C	3B
R8006	A	C	2B
R8007	A	C	2B
R8008	B	C	1B
R8009	B	C	2C
R8010	B	C	2C
R8011	B	C	2C

REF.NO.	LOCATION		
R8012	A	C	2B
R8013	B	C	1B
R8014	A	C	3A
R8015	A	C	3A
R8016	A	C	3B
R8017	A	C	3B
R8018	A	C	3B
R8019	A	C	3B
R8020	A	C	3B
R8021	A	C	3B
R8022	A	C	3B
R8023	A	C	3B
R8024	A	C	3B
R8025	A	C	3B

REF.NO.	LOCATION		
R8026	B	C	1B
R8027	B	C	1B
R8028	B	C	1B
R8029	B	C	1A
R8030	B	C	1A
OTHER			
J8001	A	D	1A
JP8001	A	D	1A
JP8002	A	D	1A
TM4	A	C	1B
TM8	A	C	1B
X8001	B	C	1B
ZP80-1	A	C	1A

REF.NO.	LOCATION		
ZP81-1	A	C	1A
ZP81-2	A	C	1A
ZP81-3	A	C	1A
ZP80-10	A	C	2B
ZP80-14	A	C	3B
ZP80-15	A	C	2A
ZP80-16	A	C	3B
ZP80-18	A	C	3B
ZP80-20	A	C	3B
ZP80-22	A	C	3B
ZP80-24	A	C	3B
ZP80-25	A	C	2B
ZP80-26	A	C	3B
ZP80-27	A	C	2B

REF.NO.	LOCATION		
ZP80-28	A	C	3B
ZP80-29	A	C	2B
ZP80-30	A	C	3B
ZP80-31	A	C	2B
ZP80-32	A	C	3B
ZP80-33	A	C	2B
ZP80-34	A	C	3B
ZP80-35	A	C	2A
ZP80-36	A	C	3B
ZP80-37	A	C	2A
ZP80-38	A	C	2B
ZP80-39	A	C	2B

4.22 ELECTRONIC VIEWFINDER CIRCUIT BOARD

FIOL SIDE (B)

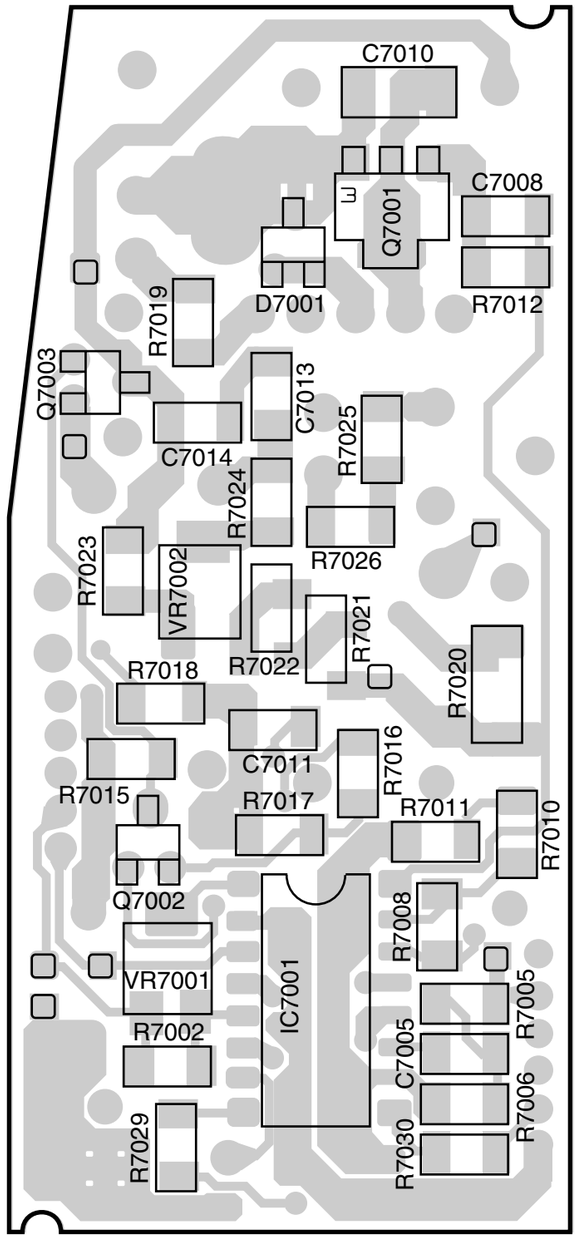

COMPONENT SIDE (A)

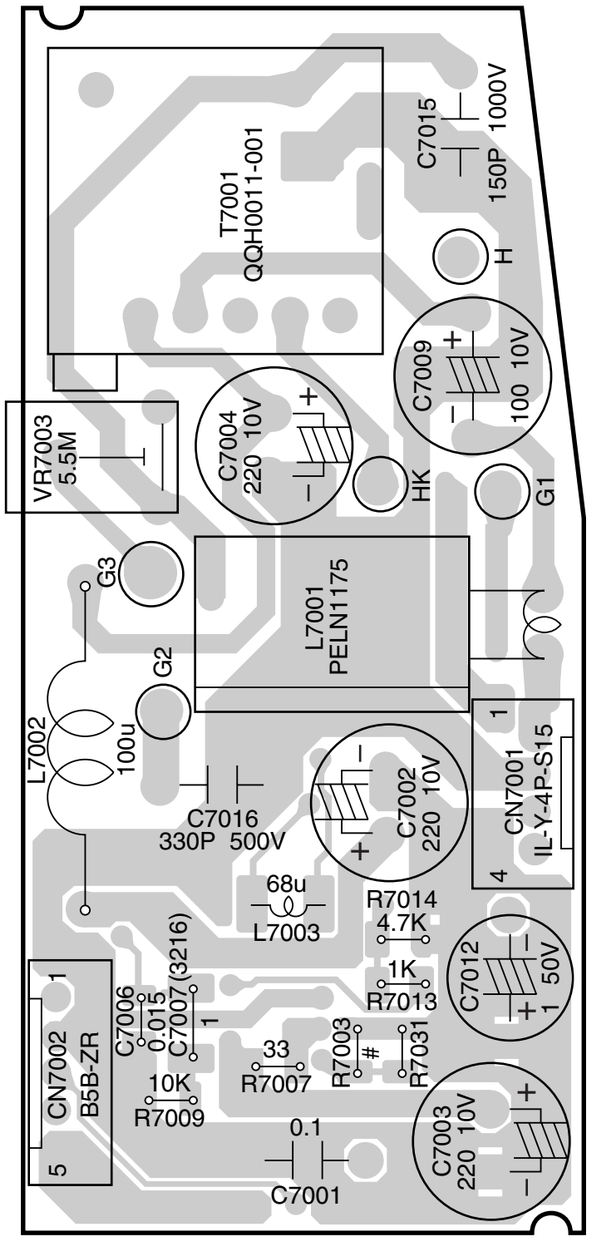

4.23 POWER SYSTEM BLOCK DIAGRAM

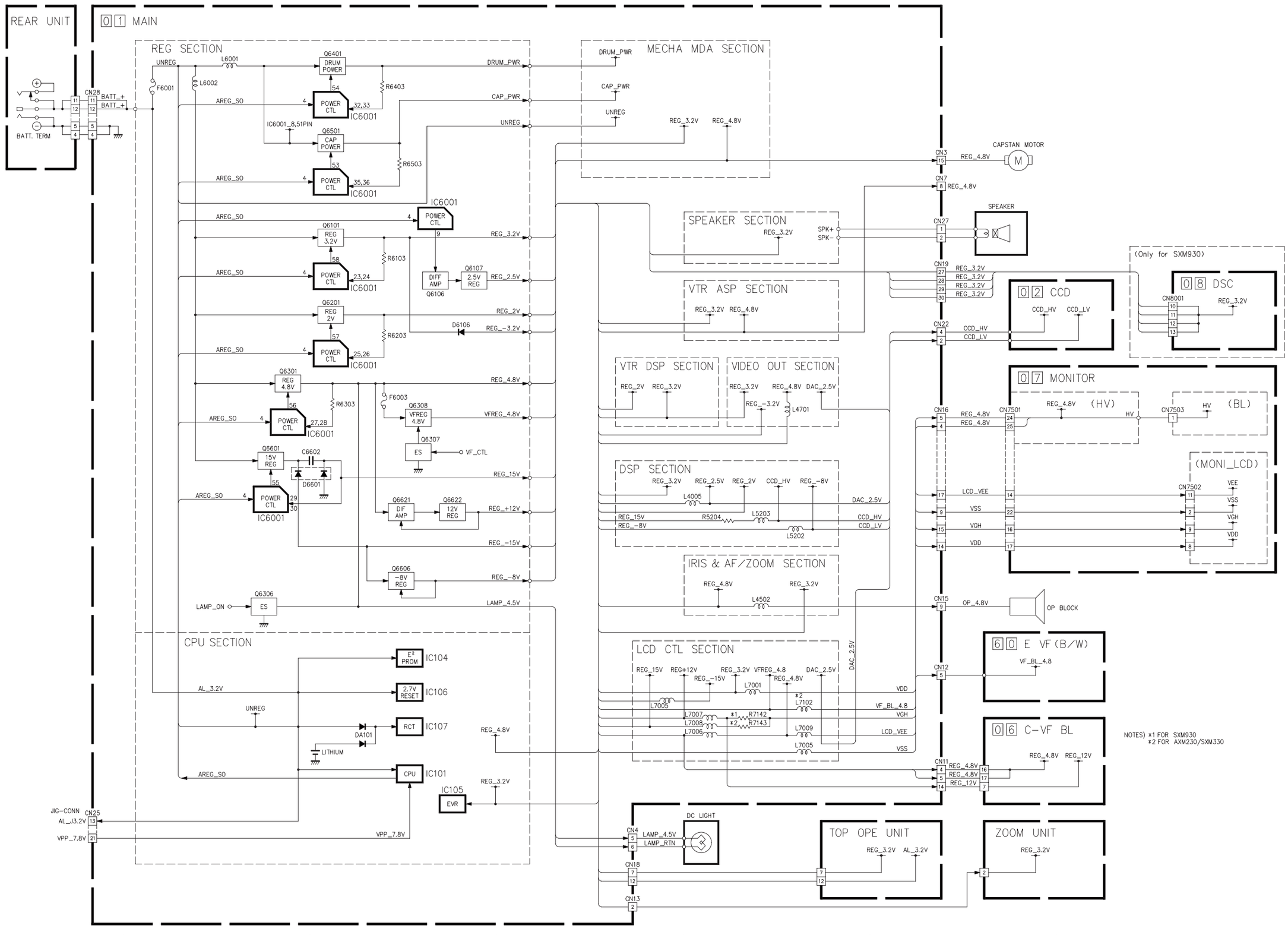

4.24 CPU/MDA SYSTEM BLOCK DIAGRAM

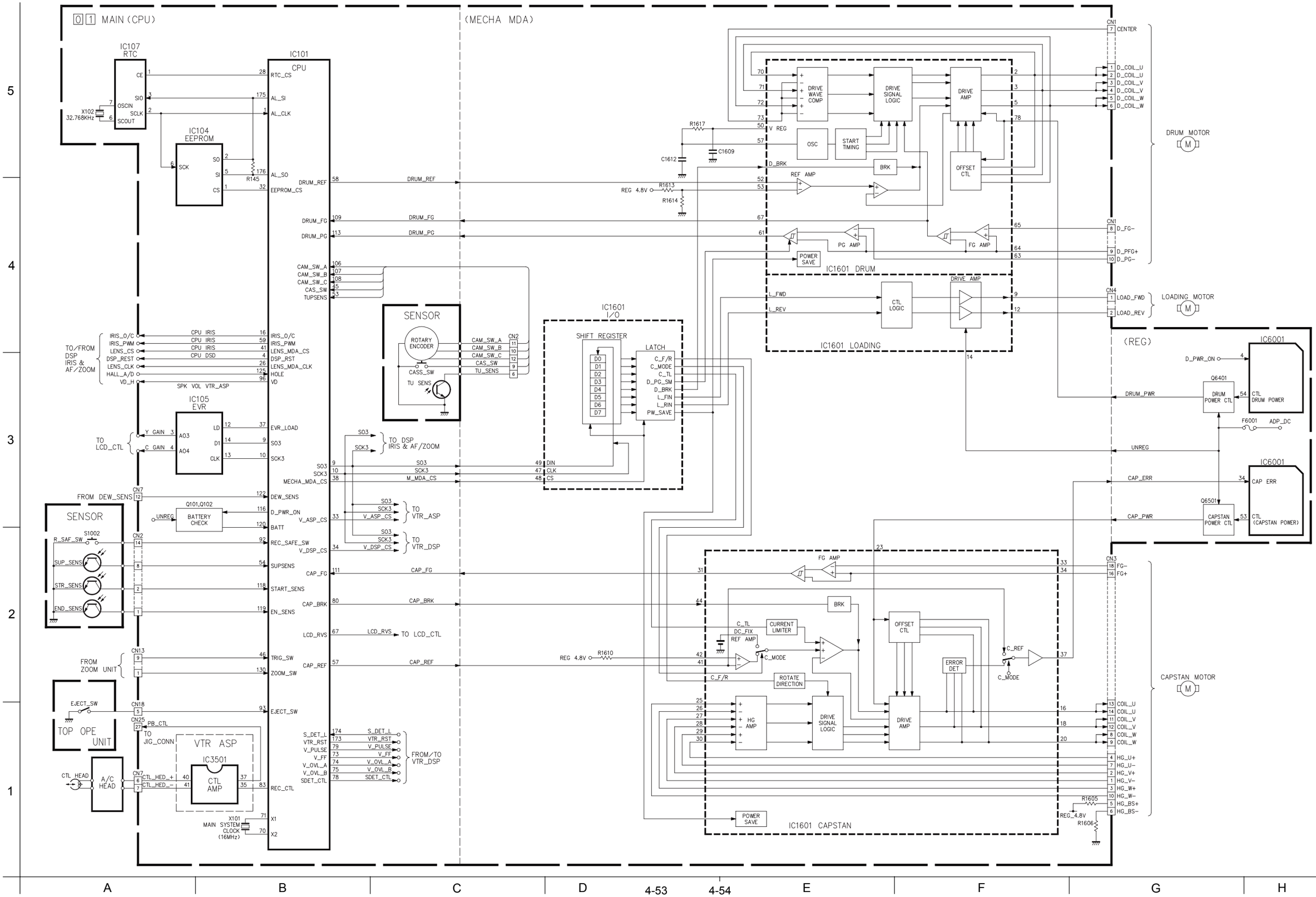

4.25 CAMERA SYSTEM BLOCK DIAGRAM

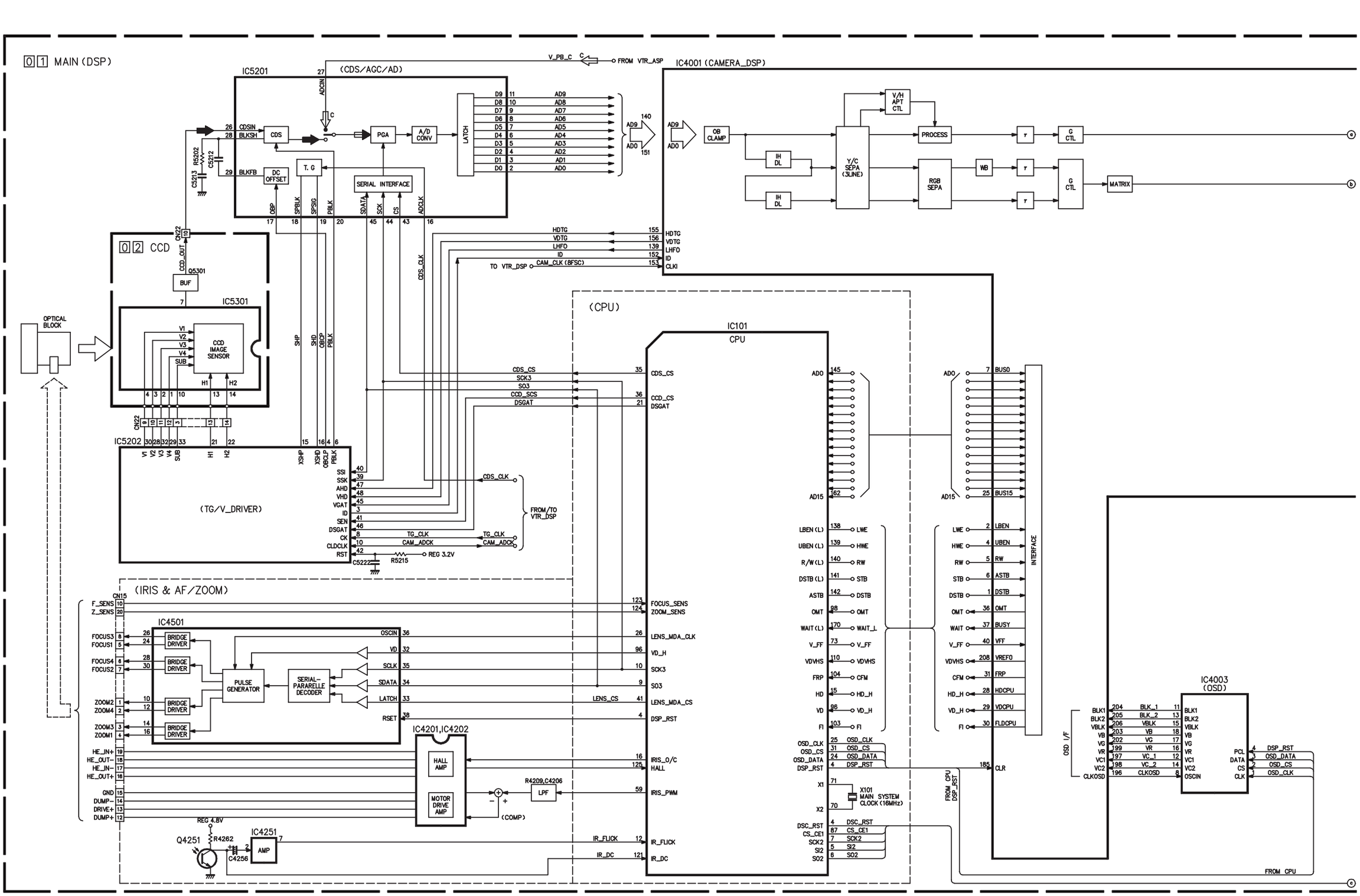

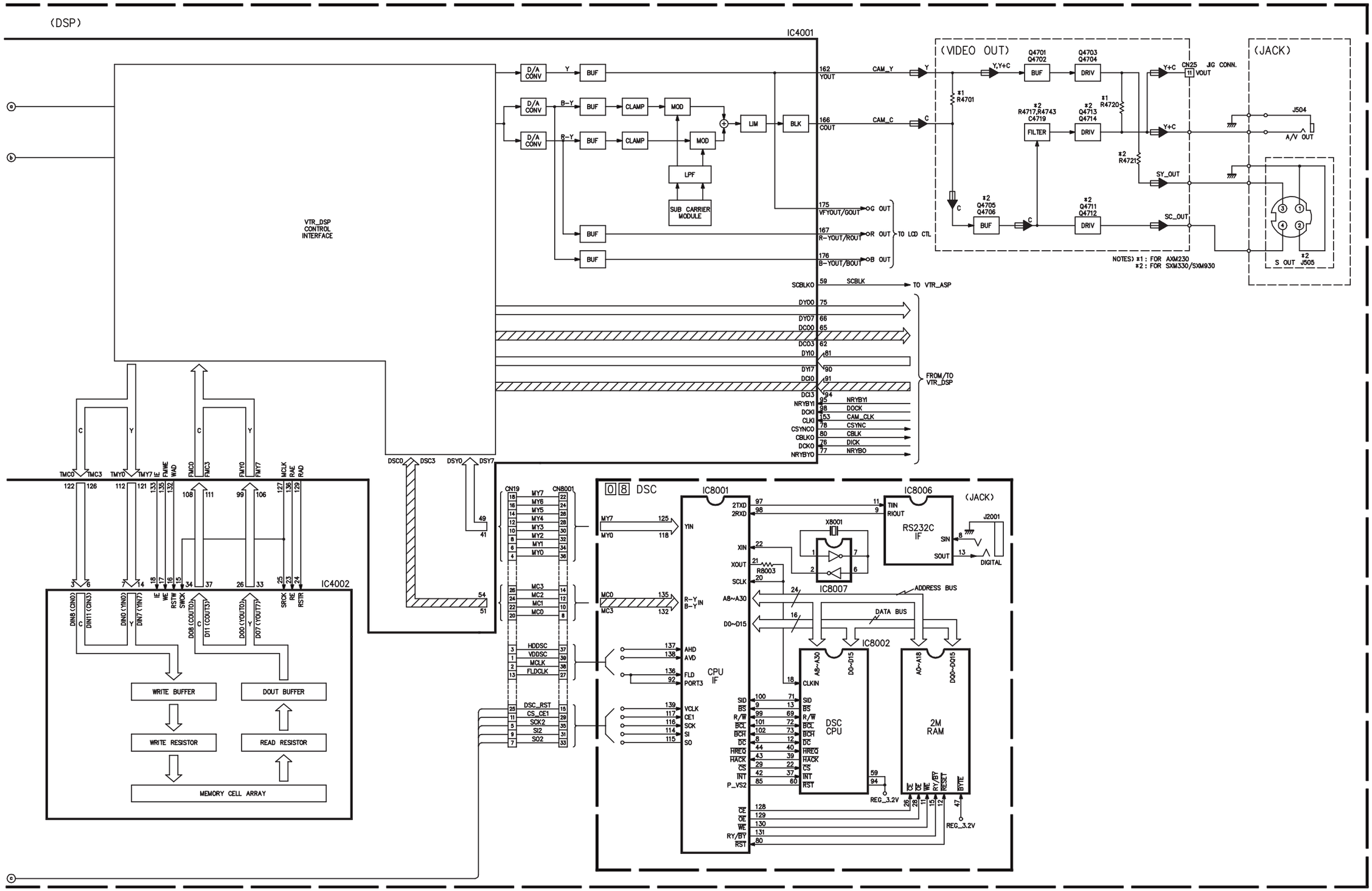
(DSP)
IC4001
VTR_DSP CONTROL INTERFACE
D/A CONV
BUF
CLAMP
MOD
LPF
SUB CARRIER MODULE
LIM
BLK
CAM_Y
CAM_C
YOUT
COUT
VFYOUT/GOUT
R-YOUT/ROUT
B-YOUT/BOUT
G OUT
R OUT
B OUT
TO LCD CTL
SCBLK
TO VTR_ASP
FROM/TO VTR_DSP
(VIDEO OUT)
Q4701 Q4702
Q4703 Q4704
Q4705 Q4706
Q4711 Q4712
R4717,R4743 C4719
Q4713 Q4714
R4720
R4721
FILTER
DRIV
SY_OUT
SC_OUT
CN25 JIG CONN.
VOUT
(JACK)
J504
A/V OUT
S OUT J505
NOTES) *1 : FOR AXM230
*2 : FOR SXM330/SXM930
IC4002
WRITE BUFFER
DOUT BUFFER
WRITE RESISTOR
READ RESISTOR
MEMORY CELL ARRAY
CN19
CN8001
08 DSC
IC8001
CPU IF
IC8006
RS232C IF
(JACK)
J2001
DIGITAL
X8001
R8003
IC8007
ADDRESS BUS
DATA BUS
IC8002
DSC CPU
2M RAM
REG_3.2V

4.26 Y/C SYSTEM BLOCK DIAGRAM

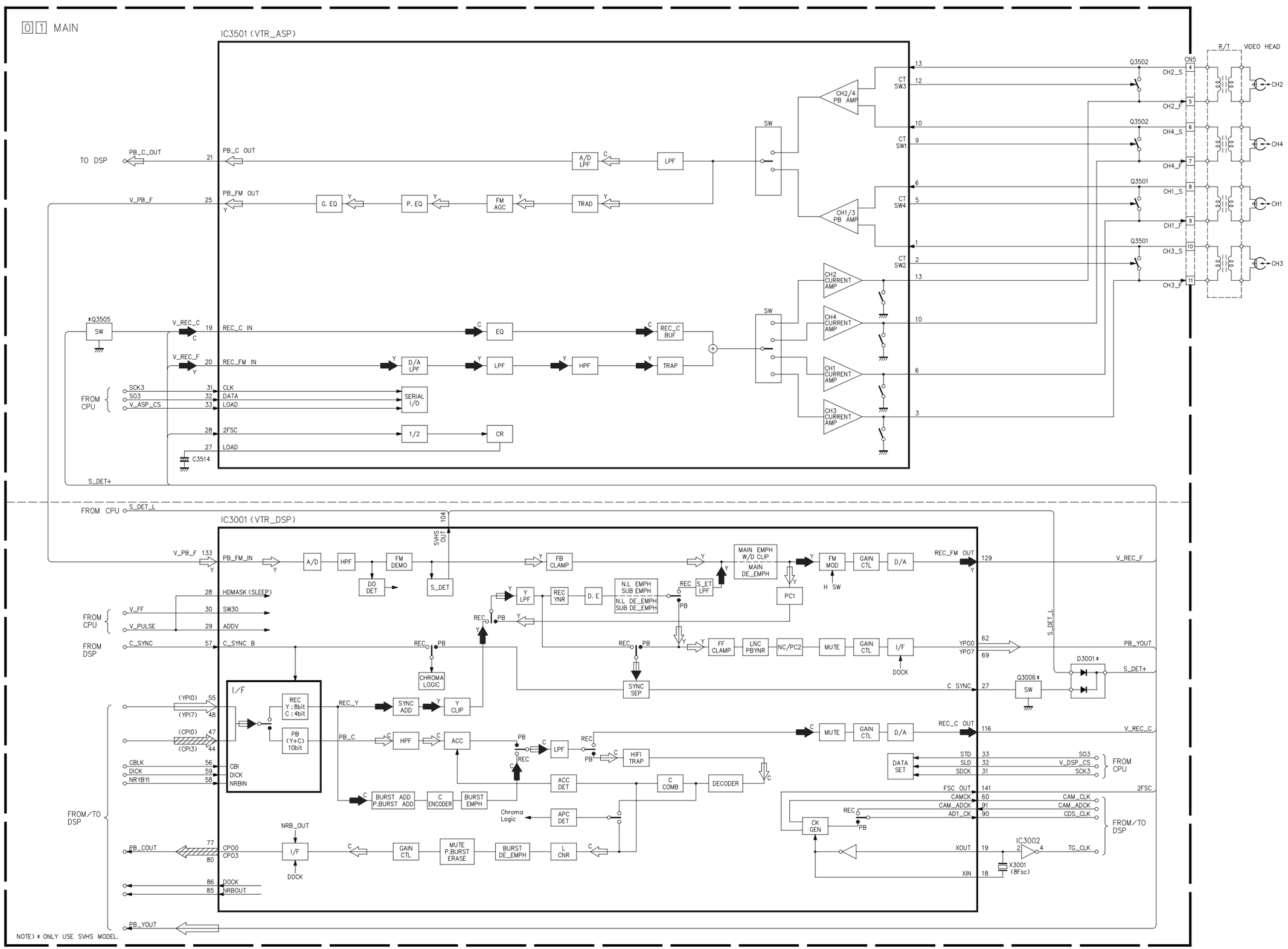

4.27 MONITOR SYSTEM BLOCK DIAGRAM

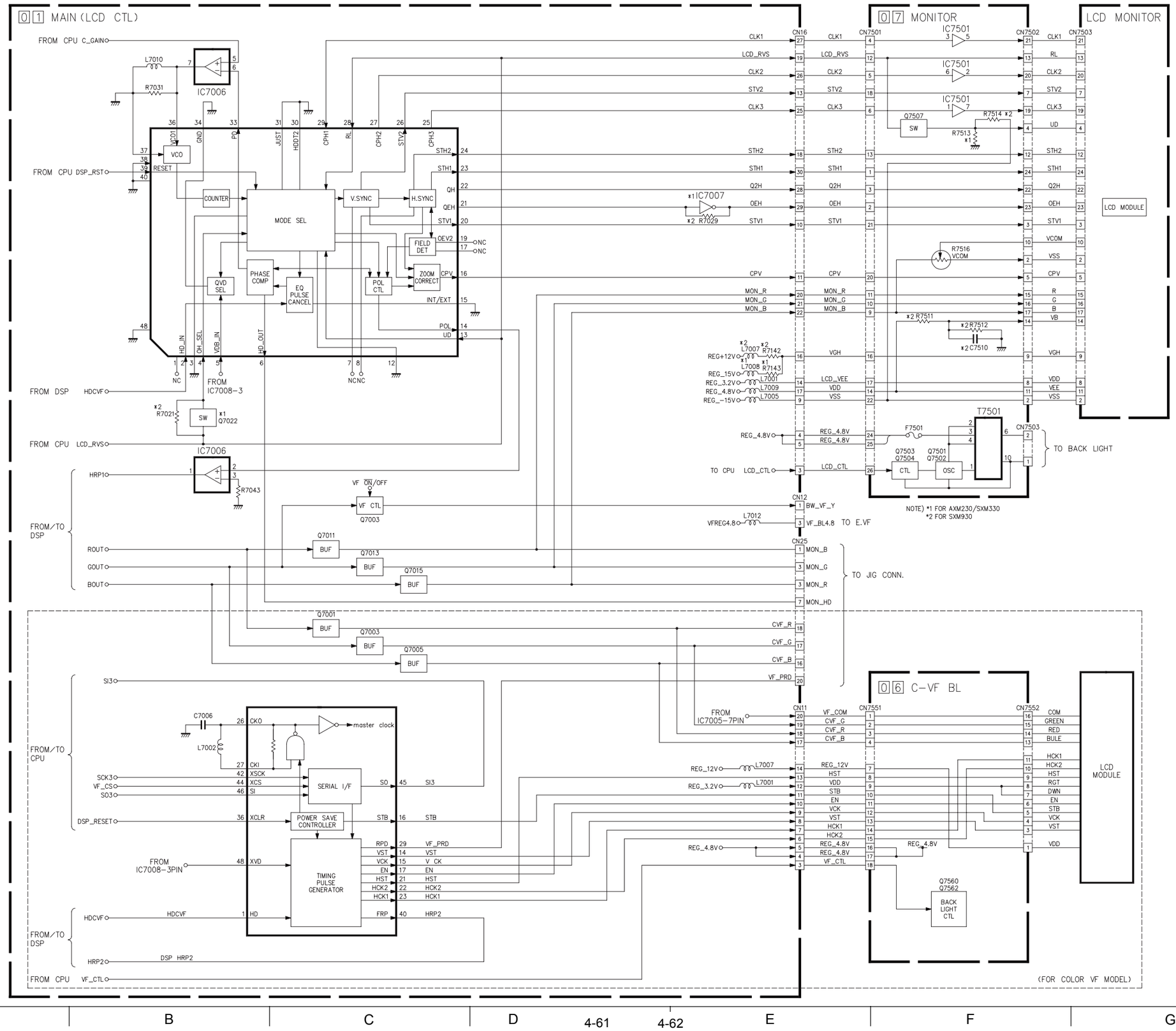

4.28 WAVEFORMS

– VTR DSP –

WF1 IC3001-129

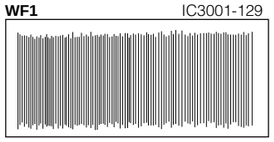

REC 0.24 Vp-p
20mV/20µsec/DIV

WF2 IC3001-116

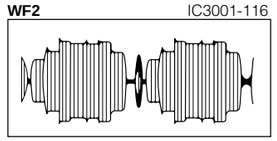

REC 0.36 Vp-p
10mV/20µsec/DIV

WF3 IC3001-133

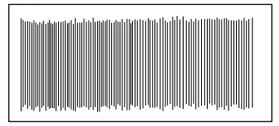

PB 0.8 Vp-p
20mV/20µsec/DIV

– VTR ASP –

WF1 IC3501-20

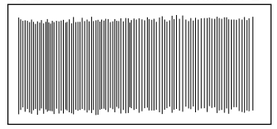

REC 0.68 Vp-p
20mV/20µsec/DIV

WF2 IC3501-19

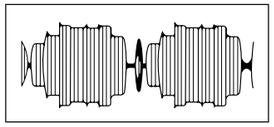

REC 0.38 Vp-p
10mV/20µsec/DIV

WF3 IC3501-25

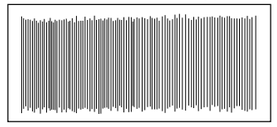

PB 0.18 Vp-p
5mV/20µsec/DIV

WF4 IC3501-21

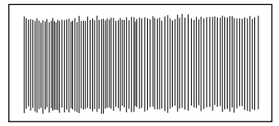

PB 0.8 Vp-p
20mV/20µsec/DIV

– DSP –

WF1 IC5201-26

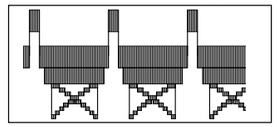

EE 4.8 Vp-p
0.1V/20µsec/DIV

WF2 IC5201-27

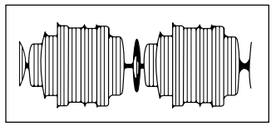

PB 0.15 Vp-p
5mV/20µsec/DIV

WF3 IC4001-167

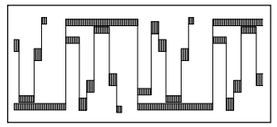

REC 0.2 Vp-p
PB 0.15 VP-P
5mV/20µsec/DIV

WF4 IC4001-175

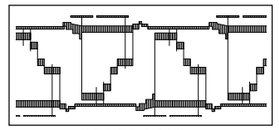

REC/PB 0.2 Vp-p
5mV/20µsec/DIV

WF5 IC4001-176

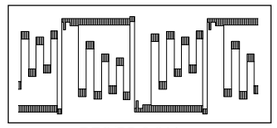

REC/PB 0.2 Vp-p
5mV/20µsec/DIV

– VIDEO OUT –

WF1 Q4701-3

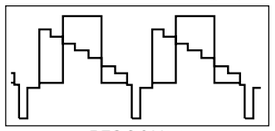

REC 2.6 Vp-p
PB 2.3 Vp-p
50mV/20µsec/DIV

WF2 Q4705-C

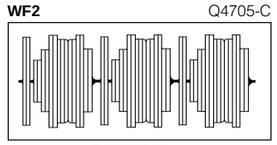

REC 1.7 Vp-p
50mV/20µsec/DIV
PB 1.3 Vp-p
20mV/20µsec/DIV

– CCD –

WF1 Q5301-B

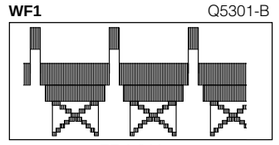

EE 1.0 Vp-p
20mV/20µsec/DIV

– CPU –

WF1 IC101-109

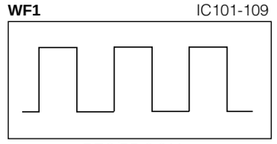

REC/PB 3.2 Vp-p
0.1V/0.2msec/DIV

WF2 IC101-111

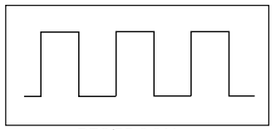

REC/PB 3.2 Vp-p
0.1V/0.2msec/DIV

WF3 IC101-113

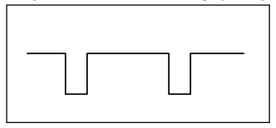

REC/PB 3.2 Vp-p
0.1V/5msec/DIV

– MECHA MDA–

WF1 IC1601-31

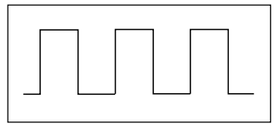

REC/PB 3.2 Vp-p
0.1V/0.2msec/DIV

WF2 IC1601-61

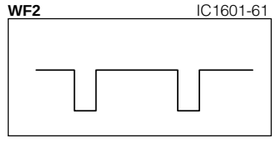

REC/PB 3.2 Vp-p
0.1V/5msec/DIV

4.29 VOLTAGE CHARTS

<CPU>

MODE PIN NO.	REC	PLAY
IC101		
1	3	3
2	3	3
3	3	3
4	3	3
5	0	0
6	0	0
7	3	3
8	3.2	3.2
9	0.6	0.6
10	3	3
11	0	0
12	1.5	1.5
13	3	3
14	0	0
15	0	0
16	1.6	0
17	0	0
18	3	3
19	0	0
20	0	0
21	3	0
22	3	3
23	2.9	2.8
24	2.6	2.6
25	2.9	2.9
26	1.5	1.5
27	3	3.1
28	0	0
29	3	3
30	3	3
31	2.4	2.3
32	3	3
33	3	3
34	3	3
35	3	3
36	0	0
37	0	0
38	0	0
39	3	3
40	0	0
41	0	0
42	0	0
43	0	0
44	0	0
45	0	0
46	2.9	3
47	0	0
48	0	0
49	2.8	0
50	2.8	2.9
51	0	2.9
52	2.8	2.9
53	-	-
54	-	-
55	3	3
56	0	0
57	1.6	1.6
58	1.5	1.5
59	1.4	0
60	2.7	2.7
61	0	0
62	3	3
63	0	0
64	0	0
65	0	0
66	3	3
67	3	3
68	0	0
69	3	3
70	1.4	1.4
71	-	-
72	0	0
73	1.5	1.5
74	0	0
75	0	0
76	0	0
77	0	0
78	0	0
79	0	0
80	0	0
81	3	3
82	0	0
83	1.8	0
84	0	3
85	3	0
86	3	0
87	3	0
88	0	0
89	0	0
90	3	3
91	0	0
92	2.7	2.7
93	2.8	2.8
94	3	3
95	0	0
96	0	0
97	0	0
98	0	0
99	3	3
100	0	0
101	3	3
102	0	0
103	1.6	1.6
104	-	-
105	3.2	3.2
106	0	0
107	3.1	3.1
108	3.1	3.1
109	1.6	1.6
110	0	0
111	1.6	1.6
112	1.8	1.9
113	2.9	3
114	0	0
115	3	3
116	3	3
117	0	2.9
118	0.8	0.8
119	3.1	3.1
120	3.2	3.2
121	2.7	2.7
122	0	0
123	0	0
124	0	0
125	1.4	0.4
126	3.1	3.1
127	3.2	3.2
128	3.2	3.2
129	2.7	2.7
130	1.6	1.6
131	3.2	3.2
132	0	0
133	3.2	3.2
134	0	0
135	3	3
136	3	3
137	0	0
138	0	0
139	0	0
140	3	3
141	3	3
142	3	3
143	3	3
144	3	3
145	0.8	1
146	0.9	1
147	0.9	1
148	0.8	1
149	0.8	1
150	0.8	1
151	0.8	1
152	0.7	0.9
153	3	3
154	0	0
155	0.8	0.9
156	0.8	1
157	0.8	0.9
158	0.8	0.9
159	0.8	0.9
160	0.7	0.9
161	0.7	0.9
162	0.7	0.8
163	0	0
164	3	3
165	3	3
166	3	0
167	0	0
168	0	0
169	0	0
170	3.2	3.2
171	0	3
172	0	3
173	0	0
174	0	0
175	3	3
176	3	3
IC102		
1	2.9	3
2	2.8	2.8
3	0	0
4	0	0
5	3	3
IC104		
1	3	3
2	3	3
3	3	3
4	0	0
5	0	0
6	3	3
7	3	3
8	3	3
IC105		
1	0	0
2	2.1	2.1
3	1.6	1.6
4	1.6	1.6
5	0	1.4
6	0	1.4
7	0	1.4
8	3.2	3.2
9	3.2	3.2
10	0	0
11	1.4	1
12	0	0
13	3	3
14	0.6	1
15	2.4	2.4
16	0	0
IC106		
1	0	0
2	0	0
3	3	3
4	3	3
IC107		
1	0	0
2	3	3
3	3	3
4	0	0
5	0	0
6	0	0.6
7	0.7	0
8	3	3
IC1801		
1	3	3
2	0	0
3	4.8	4.8
Q101		
E	11	11
C	0	11.1
B	10.3	10.3
Q102		
E	0	0
C	3.2	3.3
B	3	3
Q103		
E	0	0
C	0	4.8
B	0.7	0
Q104		
E	0	0
C	4.9	4.9
B	0	0
Q105		
E	0	0
C	-0.5	-0.4
B	5.1	5
Q110		
E	0	0
C	0	0
B	3	3
Q111		
E	0	0
C	0	0
B	3	3
Q112		
E	0	0
C	2.2	2.2
B	0	0
Q113		
E	-	-
C	-	-
B	-	-

<VTR ASP>

MODE PIN NO.	REC	PLAY
IC2001		
1	1.4	3.2
2	1.5	0
3	1.5	0
4	1.5	3.2
5	1.5	3.2
6	1.4	0
7	0	0
8	1.4	0
9	1.5	3.2
10	1.4	0
11	1.5	3.2
12	1.5	0
13	1.5	3.2
14	3	3.2
IC3501		
1	2.2	2.2
2	2.3	2.4
3	2.2	2.2
4	2.2	2.2
5	2.4	2.3
6	2.2	2.2
7	4.8	4.8
8	2.2	2.2
9	2.3	2.4
10	2.2	2.2
11	2.2	2.2
12	2.3	2.2
13	2.2	2.2
14	0	0
15	3	0
16	2.9	1.2
17	4	5.2
18	0	0
19	2.9	0
20	2.8	0
21	1	0
22	1	2.2
23	2.1	2.1
24	4.7	4.8
25	2.4	2.4
26	0	3
27	2.5	2.5
28	2.9	2.9
29	0	0
30	1.5	1.5
31	3	3
32	0.6	0.9
33	3	3
34	1.9	1.8
35	1.8	0
36	0	0
37	2.6	2.3
38	3	3
39	4.8	4.8
40	2.4	2.1
41	2.3	2.1
42	2.8	2.8
43	2.8	2.5
44	2.7	2.5
45	2.5	2.4
46	2.3	2.5
47	0	0.4
48	2.5	2.5
49	2.5	2.5
50	0	0
51	2.5	2.5
52	2.5	2.5
53	2.5	2.5
54	4.7	4.7
55	2.5	2.5
56	0	1.4
Q2001		
E	3	3.2
C	1.4	3.2
B	3	0
Q2007		
1	-10.5	0
2	-16.6	0.7
3	0	0
4	-10.5	0
5	-16.6	0.7
6	0	0
Q2008		
1	3	1.8
2	3	1.2
3	3	1.2
4	3	1.7
5	3	1.2
6	-16.6	0.8
Q2021		
E	0	0
C	0	0
B	0	0
Q2022		
E	0	0
C	0	0
B	0	3
Q2023		
E	0	0
C	0	0
B	0	0
Q2071		
E	4.4	4.4
C	4.7	4.7
B	4.7	4.7
Q3501		
1	2.2	2.2
2	2.3	2.4
3	2.2	2.2
4	2.2	2.2
5	2.3	2.3
6	2.2	2.2
Q3502		
1	2.2	2.2
2	2.3	2.3
3	2.2	2.2
4	2.2	2.2
5	2.3	2.4
6	2.2	2.2
Q3505		
E	0	0
C	2.9	2.9
B	0	0
Q3901		
1	4.6	4.7
2	4	5.2
3	0	5.2

MODE PIN NO.	REC	PLAY
4	4.6	4.8
5	4	5.3
6	0	0

<MECHA MDA>

MODE PIN NO.	REC	PLAY
IC1601		
1	0	0
2	1.3	1.3
3	1.3	1.3
4	0	0
5	1.3	1.3
6	0	0
7	0	0
8	0	0
9	0.4	0
10	0	0
11	0	0
12	0	0.4
13	0	0
14	11	11.1
15	0	0
16	0.6	0.6
17	0	0
18	0.7	0.6
19	0	0
20	0.6	0.6
21	0	0
22	0	0
23	1.4	1.3
24	11.1	11.1
25	2.4	2.4
26	2.4	2.4
27	2.4	2.4
28	2.4	2.4
29	2.4	2.4
30	0	2.4
31	1.6	1.6
32	2.4	2.4
33	2.1	2.4
34	2.4	2.4
35	4.8	4.8
36	3	3
37	0.8	0.8
38	0	0.7
39	0.7	0.7
40	0	1.2
41	1.6	1.6
42	4.8	4.8
43	4.8	4.8
44	0	0
45	0	0
46	0	0
47	3	3
48	0	0
49	0.6	1
50	2	1.9
51	0	0
52	1.5	1.5
53	1.2	1.2
54	4.8	4.8
55	0.7	0.7
56	0.7	0.7
57	1.1	1.1
58	0.7	0.7
59	0	0
60	1.6	0
61	2.9	2.9
62	1.8	1.8
63	2.3	2.3
64	2.4	2.3
65	2.4	2.3
66	2.4	2.3
67	1.6	1.6
68	0.9	0.9
69	0	0

MODE PIN NO.	REC	PLAY
70	1.3	1.3
71	1.3	1.3
72	0	1.3
73	1.3	1.3
74	1.1	1.2
75	0.4	0.5
76	3.9	3.9
77	11.1	11
78	2.7	2.7
79	0	0
80	0	0

<SPEAKER>

MODE PIN NO.	REC	PLAY
IC2401		
1	1.3	1.3
2	3.2	3.2
3	1.3	1.3
4	0	0
5	0.6	0.6
6	0	0
7	0	0
8	0.6	0.6
Q2401		
E	0	0
C	3.2	3.2
B	0	0
Q2402		
E	3.2	3.2
C	0.6	0.6
B	3.2	3.2

<VTR DSP>

MODE PIN NO.	REC	PLAY
IC3001		
1	3.2	3.2
2	3.2	3.2
3	0	0
4	1.9	1.9
5	0	0
6	0	0
7	0	0
8	0	0
9	0	0
10	0	0
11	0	0
12	0	0
13	3.3	3.2
14	1.9	1.9
15	0	0
16	0	0
17	3.2	3.2
18	1.5	1.5
19	1.5	1.5
20	0	0
21	1.3	1.3
22	1.3	1.3
23	1.3	1.3
24	0	0
25	0	0
26	0	0
27	0	0
28	0	0
29	0	0
30	1.5	1.5
31	3	3
32	3	3
33	0.6	1
34	3.2	3.2
35	3.2	3.2
36	3.2	3.2
37	0	0
38	0	0
39	0	0
40	0	0
41	0	0
42	0	0
43	0	0
44	1.5	0
45	1.5	0
46	1.3	1.2
47	1.1	1.9
48	0.7	1.9
49	0.8	1.9
50	1	1.8
51	1.1	1.6
52	2.3	1.6
53	1.9	0
54	2	1.5
55	1.1	1.5
56	2.4	0
57	2.9	2.8
58	1.6	1.6
59	1.5	1.6
60	1.4	1.3
61	3.2	3.2
62	1.3	1.6
63	1.2	1.6
64	2	1.7
65	1.5	1.8
66	0.6	1.9
67	0.5	0.6
68	2	2
69	1.4	1.4
70	1.9	1.9
71	0	0
72	0	0
73	0	0
74	0	0
75	0	0
76	0	0
77	1.3	1.5
78	1.3	1.6

MODE PIN NO.	REC	PLAY
79	1.3	1.7
80	1.4	1.4
81	0	0
82	0	0
83	0	0
84	0	0
85	1.6	1.6
86	1.5	1.5
87	2.9	2.9
88	3.2	3.2
89	0	0
90	1.6	1.5
91	1.6	1.6
92	1.4	1.4
93	0	0
94	0	0
95	0	0
96	0	0
97	0	0
98	0	0
99	0	0
100	0	0
101	0	0
102	0	0
103	0	0
104	0	3.2
105	3.2	3.2
106	0	0
107	0	0
108	0	0
109	3.2	3.2
110	3.2	3.2
111	0	0
112	1.9	1.9
113	1.9	1.9
114	0	0
115	3.2	3.2
116	0	0
117	0.9	0.9
118	1.6	1.6
119	2	2
120	0	0
121	0	0
122	0.8	0
123	3.2	3.2
124	0	0
125	0	0
126	1.1	0
127	1.9	3.2
128	1.9	1.9
129	1.9	0
130	0	1
131	3.2	0
132	3.2	3.2
133	0.7	1.5
134	0.7	1.5
135	2.2	2.2
136	3.2	3.2
137	0.8	0.5
138	3.2	3.2
139	0	0
140	0	0
141	1.5	1.5
142	3.2	3.2
143	3.2	3.2
144	3.2	3.2
IC3002		
1	0	0
2	1.5	1.5
3	0	0
4	1.6	1.6
5	3.2	3.2
Q3002		
1	0.8	0.8
2	1.4	1.4
3	3.2	3.2
4	2.2	2.2
5	2.9	2.9
6	3.2	3.2

MODE PIN NO.	REC	PLAY
Q3003		
E	1.9	1.9
C	2	2
B	2.6	2.6
Q3006		
E	0	0
C	0	2.8
B	0	0

<DSP>

MODE PIN NO.	REC	PLAY
IC4001		
1	3	3
2	1.6	1.6
3	0	0
4	0	0.9
5	3	3
6	3	3
7	1.1	1.3
8	1.1	1.2
9	1.1	1.2
10	3.2	3.2
11	1	1.1
12	1	1.2
13	1	1.1
14	1	1.2
15	0	0
16	1	1.1
17	1	1.2
18	1	1.2
19	2	2
20	1.1	1.1
21	1.1	1.1
22	1.1	1.2
23	1	1.2
24	1	1.2
25	1	1.2
26	0	0
27	2	2
28	0	0
29	0	0
30	1.6	1.6
31	-	-
32	0	0
33	3	3
34	2	2
35	3.1	3.1
36	0	0
37	3.2	3.2
38	0	0
39	0	0
40	1.5	1.5
41	0.9	1.2
42	0.9	1.2
43	3.2	3.2
44	1	1.2
45	1	1.3
46	1	1.3
47	1	1.3
48	1	1.3
49	1	1.3
50	0	0
51	1.1	1.2
52	1.1	1.2
53	1.2	1.2
54	1.2	1.2
55	1.4	1.5
56	1.5	1.6
57	0	0
58	0	0
59	3.2	3.2
60	0	0
61	3.2	3.2
62	1.4	0
63	1.2	0
64	1.1	1.4
65	1.1	1.6
66	0.6	1.6
67	0.9	1.5
68	1	1.5
69	0.6	1.5
70	2.1	0
71	2	1.5
72	0	0
73	2	2
74	2	1.5
75	1	1.5
76	1.5	1.5
77	1.6	1.6
78	2.9	2.9

MODE PIN NO.	REC	PLAY
79	2	2
80	2.4	2.4
81	1.3	1.9
82	1.2	1.8
83	2.1	1.9
84	1.5	1.9
85	0	0
86	2	2
87	0.9	1.9
88	0.6	1.9
89	2.1	2
90	1.3	1.8
91	1.3	1.6
92	1.1	1.6
93	1.3	1.6
94	1.4	1.5
95	1.6	1.6
96	0	0
97	3.2	3.2
98	1.5	1.5
99	1.7	1.7
100	1.9	1.6
101	1.9	1.6
102	1.8	1.6
103	1.3	1.6
104	1.2	1.5
105	1.4	1.4
106	1.3	1.3
107	0	0
108	1.5	1.8
109	1.4	1.8
110	1.6	1.9
111	1.6	1.8
112	1.2	1.6
113	1.8	1.3
114	3.2	3.2
115	1.8	1.5
116	1.4	1.6
117	0.8	1.5
118	0.7	1.5
119	0	0
120	0.9	1.5
121	0.8	0.8
122	1	1.5
123	2	2
124	1	1.6
125	1.2	1.6
126	1.3	1.5
127	1.5	1.5
128	0	0
129	0	0
130	0	0
131	2	2
132	0	0
133	3	3
134	2.6	2.6
135	2.6	2.6
136	2.6	2.7
137	3.2	3.2
138	2	2
139	0	0
140	0	1.4
141	0.5	1.6
142	0	0
143	0.7	1.6
144	0.8	1.6
145	2.3	1.6
146	0.8	1.6
147	3.2	3.2
148	0.8	1.5
149	1.1	1.6
150	1.2	1.6
151	1.2	1.6
152	1.5	1.6
153	1.3	1.3
154	0	0
155	2.9	0
156	3.1	0
157	0	0

MODE PIN NO.	REC	PLAY
158	3.2	3.2
159	2.5	2.5
160	1.1	1.1
161	1.1	1.1
162	0.7	0.8
163	0	0
164	1.1	1.1
165	1.1	1.1
166	0.7	0.7
167	0.9	0.9
168	0	0
169	2.5	2.5
170	0	0
171	0	0
172	1.1	1.1
173	1.1	1.1
174	0	0
175	0.9	0.8
176	0.9	0.8
177	2.5	2.5
178	1.1	1.2
179	1.1	1.1
180	1.2	1.2
181	0	0
182	2.5	2.5
183	2	2
184	3.2	3.2
185	3	3
186	0	0
187	0	0
188	3.2	3.2
189	0	0
190	2	2
191	3.2	3.2
192	3.2	3.2
193	1.3	1.3
194	3.1	1.3
195	3	3.1
196	1.5	3
197	0	1.4
198	0	0
199	0	0
200	0	0
201	3.2	3.2
202	0	0
203	0	0
204	0	0
205	0	0
206	0	0
207	3.2	3.2
208	0	0
IC4002		
1	0	0
2	0	0
3	1.4	1.3
4	1.2	1.7
5	1.1	1.4
6	1.1	1.3
7	0.7	0.7
8	1.1	0.9
9	1	1
10	0.9	1.1
11	1.4	1.1
12	1.7	1.5
13	1.8	1.3
14	1.3	1.4
15	1.5	1.5
16	0	0
17	2.6	2.6
18	3	3
19	3.2	3.2
20	0	0
21	3.2	3.2
22	2.7	2.7
23	2.6	2.6
24	0	0
25	1.5	1.6
26	1.7	1.5
27	1.9	1.7

MODE PIN NO.	REC	PLAY
28	1.9	1.7
29	1.9	1.8
30	1.4	1.5
31	1.5	1.4
32	1.6	1.5
33	1.2	1.4
34	1.6	1.2
35	1.5	1.5
36	1.7	1.9
37	1.5	1.5
38	0	0
IC4003		
1	2.9	2.9
2	2.4	2.2
3	2.6	2.5
4	3	3
5	3.2	3.2
6	0	0
7	1.3	1.3
8	1.5	1.5
9	0	0
10	0	0
11	0	0
12	0	0
13	0	0
14	0	0
15	0	0
16	0	0
17	0	0
18	0	0
19	3.1	3.1
20	3	3
IC5201		
1	0	0
2	1.2	1.6
3	1.2	1.6
4	1.1	1.6
5	0.8	1.5
6	0.8	1.5
7	2.2	1.6
8	0.8	1.6
9	0.7	1.6
10	0.6	1.6
11	0	1.4
12	0	0
13	0	0
14	0	0
15	3.1	3.1
16	1.6	1.5
17	3	0
18	2.7	0
19	2.7	0
20	2.5	0
21	0	0
22	0	0
23	3.2	3.1
24	0	0
25	0	0
26	2.1	-
27	1.5	1.5
28	2.1	0
29	2.1	0
30	0	0
31	3.1	3.1
32	2.1	2.1
33	1	1
34	1.5	1.5
35	1.3	1.2
36	0	0
37	0	0
38	3.1	3.2
39	0	0
40	0	0
41	3.1	3.2
42	0	0
43	0	3
44	3	3
45	0.6	1
46	3.1	3.2

MODE PIN NO.	REC	PLAY
47	0	0
48	0	0
IC5202		
1	3.1	3.1
2	3.1	3.1
3	1.5	1.6
4	3	0
5	3	0
6	0	0
7	0	0
8	1.6	1.6
9	3.1	3.1
10	1.5	1.6
11	1	1.3
12	1.6	0
13	3.1	3.2
14	0	0
15	2.7	0
16	2.7	0
17	2.5	0
18	0	0
19	3.1	3.2
20	3.1	3.2
21	1.6	0
22	1.3	0
23	0	0
24	0	0
25	0	0
26	0	0
27	0	0
28	0	0
29	-7.3	0
30	0	14.9
31	14.9	14.8
32	-7.3	14.9
33	-7.8	14.8
34	-7.8	-8.2
35	0	0
36	0	0
37	3.1	0
38	0	0
39	3	0
40	0.6	0.9
41	0	0
42	3.1	3.1
43	0	0
44	3.1	3.2
45	0	0
46	3	0
47	2.9	0
48	3.1	0

<IRIS & AF/ZOOM>

MODE PIN NO.	REC	PLAY
IC4201		
1	2.2	2.8
2	1.6	0.4
3	1.6	0.4
4	0	0
5	1.9	1.9
6	1.9	1.9
7	1.9	1.9
8	4.8	4.8
IC4202		
1	1.3	0
2	1.3	0
3	1.3	0
4	4.8	4.8
5	1.9	1.9
6	1.9	1.9
7	1.3	0.4
8	2.5	2.5
9	1.9	1.9
10	1.9	1.9
11	0	0
12	0.4	0.4
13	0.4	0.4
14	0.9	1
IC4251		
1	2	1.9
2	2	2
3	2	1.9
4	0	0
5	2	1.9
6	1.9	1.9
7	1.7	1.6
8	4.8	4.8
IC4501		
1	0	0
2	0.7	0.8
3	0	0
4	0	0
5	0	0
6	0	0
7	0	0
8	3.2	3.2
9	4.8	4.8
10	0	0
11	0	0
12	0.4	0
13	4.8	4.8
14	0	0
15	0	0
16	0	0
17	0	0
18	0	0
19	0	0
20	0	0
21	0	0
22	-	0
23	4.8	4.8
24	-	-
25	0	0
26	-	0.4
27	4.8	4.8
28	0.8	0
29	0	0
30	3.5	0
31	0	0
32	0	0
33	0	0
34	0.6	0.9
35	3	3
36	1.5	1.5
37	1.5	1.5
38	3	3
Q4201		
E	0.4	0.4
C	1.2	1.2
B	1	1

MODE PIN NO.	REC	PLAY
Q4251		
E	0	0
C	4.4	4.5
B	-	-
Q4501		
E	0	0
C	3.9	4
B	0	0

<VIDEO OUT>

MODE PIN NO.	REC	PLAY
Q4701		
1	0.7	0.7
2	1.3	1.3
3	2.4	2.3
4	0.6	0.7
5	1.3	1.3
6	1.3	1.3
Q4702		
E	1.8	1.8
C	4.8	4.8
B	2.4	2.4
Q4703		
1	0	0
2	0	0
3	4.8	4.8
4	0	0
5	0.9	0.9
6	4.8	4.8
Q4704		
1	0.9	0.9
2	0	0
3	-3.1	-3.1
4	0	0
5	0	0
6	-3.1	-3.1
Q4705		
E	0.7	0.7
C	3.3	3.3
B	1.3	1.3
Q4706		
E	2.6	2.6
C	4.8	4.8
B	3.2	3.3
Q4707		
E	1.8	1.8
C	4.8	4.8
B	2.4	2.4
Q4711		
1	0	0
2	0	0
3	4.8	4.8
4	0	0
5	0.9	0.8
6	4.8	4.8
Q4712		
1	0.8	0.9
2	0	0
3	-3.1	-3.1
4	0	0
5	0	0
6	-3.1	-3.1
Q4713		
1	0	0
2	0	0
3	4.8	4.8
4	0	0
5	0.9	0.9
6	4.8	4.8
Q4714		
1	0.8	0.9
2	0	0
3	-3.1	-3.1
4	0	0
5	0	0
6	-3.1	-3.1

MODE PIN NO.	REC	PLAY
Q4715		
1	0.7	0.7
2	1.4	1.3
3	2.4	2.4
4	0.7	0.7
5	1.4	1.4
6	1.4	1.3

<REG>

MODE PIN NO.	REC	PLAY
IC6001		
1	3.1	3.1
2	3	3
3	3	3
4	3	3
5	-	-
6	0	0
7	1.3	0
8	11	1.2
9	1	1
10	1.3	1.3
11	2.2	1
12	0	0
13	0	0
14	0	0
15	0	0
16	0	0
17	0	0
18	0	0
19	2.2	2.2
20	1	1
21	0	0
22	2.2	2.2
23	1	1
24	0.6	0.6
25	1	1
26	0.6	0.6
27	1	1
28	0	0
29	1	1
30	0.8	0.8
31	0	0
32	0	0
33	0.6	0.6
34	0	0
35	0	0
36	0.5	0.5
37	0.8	0.8
38	0	0
39	1	1
40	0	0
41	2.4	2.4
42	1.1	1.1
43	0	0
44	2.1	2.2
45	2.2	2.2
46	2.2	2.2
47	6.3	6.3
48	1	1
49	1	1
50	10.6	10.8
51	11	11
52	0	0
53	9.7	9.7
54	8.4	8.4
55	6.3	6.3
56	6	6
57	9	9
58	7.8	7.8
59	0	0
60	11	11
61	0	0
62	10.3	10.3
63	1.2	1.2
64	1	1

MODE PIN NO.	REC	PLAY
Q6101		
1	3.2	3.2
2	3.2	3.2
3	7.8	7.8
4	11	11
5	3.2	3.2
6	3.2	3.2
Q6106		
1	0.4	0.4
2	0.9	0.9
3	0.6	0.6
4	0.4	0.4
5	1	1
6	3.2	3.2
Q6107		
E	3.2	3.2
C	2.5	2.5
B	0.6	0.6
Q6201		
1	2	2
2	2	2
3	9	9
4	11	11
5	2	2
6	2	2
Q6301		
G	6	6
D	4.9	4.9
S	11	11
Q6306		
G	0	0
D	0	0
S	0	0
Q6307		
E	0	0
C	4.8	4.8
B	0	0
Q6308		
E	4.8	4.8
C	0	0
B	4.8	4.8
Q6401		
1	2.8	2.7
2	2.8	2.7
3	8.3	8.4
4	11	11.1
5	2.8	2.7
6	2.8	2.7
Q6501		
1	1.5	1.3
2	1.5	1.3
3	9.5	9.7
4	11.1	11.1
5	1.5	1.3
6	1.5	1.3
Q6601		
G	10.8	6
D	3.2	4.9
S	11	11.1
Q6608		
E	0	0
C	14.9	14.8
B	-0.9	-0.9
Q6621		
1	4.2	4.2
2	5.4	5.5
3	14.5	14.6
4	4.2	4.2
5	4.7	4.7
6	14.8	14.8
Q6622		
E	14.8	14.8
C	12.3	12.3
B	14.6	14.6
Q6701		
1	11	11.1
2	11	11.1
3	0	0
4	0	0

MODE PIN NO.	REC	PLAY
5	0	0
6	0	0
Q6702		
E	0	0
C	0	0
B	0	0
Q6801		
E	11	11
C	3.2	3.2
B	10.8	10.8
Q6811		
E	11	11
C	3.1	3.1
B	10.4	10.4

<LCD CTL>

MODE PIN NO.	REC	PLAY
IC7001		
1	3	2.9
2	0	0
3	0	0
4	0	0
5	0	0
6	0	0
7	0	0
8	0	0
9	0	0
10	0	0
11	0	0
12	0	0
13	3.2	3.2
14	0	0
15	1.6	1.6
16	3.1	3.2
17	3.2	3.2
18	0	0
19	3.1	3.2
20	3.2	3.2
21	0	0
22	1.6	1.6
23	1.6	1.6
24	0	0
25	3.2	3.2
26	1.6	1.6
27	1.6	1.6
28	0	0
29	2.1	2.1
30	0	0
31	0	0
32	1	1
33	1	1
34	3.2	3.2
35	1	1
36	3	3
37	3.1	3.1
38	3.2	3.2
39	0	0
40	1.5	1.6
41	3.2	3.2
42	2.9	2.9
43	3.1	3.2
44	3	3
45	0.4	0.4
46	0.6	0.4
47	0	0
48	3	3.1
IC7002		
1	1.1	1.1
2	3	3
3	0	0
4	2.9	2.9
5	3.1	3.1
6	3	3
7	3.1	3.1
8	0	0
9	0	0

<DSC>

MODE PIN NO.	REC	PLAY
10	0	0
11	0	0
12	0	0
13	0	0
14	1.6	1.6
15	0	0
16	0.5	0.5
17	1.1	1.1
18	1.1	1.1
19	1.1	1.1
20	0	0
21	0	0
22	1.6	1.6
23	0	0
24	0	0
25	1.4	1.4
26	0	0
27	1.4	1.4
28	0	0
29	1.4	1.4
30	0	0
31	0	0
32	0	0
33	1.7	1.7
34	0	0
35	3.2	3.2
36	1.6	1.5
37	1.5	1.5
38	0	0
39	3	3
40	0	0
41	3.2	3.2
42	0	0
43	0	0
44	0	0
45	0	0
46	3.2	3.2
47	3.2	3.2
48	0	0
IC7005		
1	6.1	6.2
2	6.1	6.1
3	6.1	6.2
4	0	0
5	5.8	5.8
6	5.8	5.8
7	5.8	5.8
8	14.9	14.9
IC7006		
1	7.4	7.4
2	7.4	7.4
3	7.4	7.4
4	0	0
5	1.7	1.7
6	1.7	1.7
7	8	8
8	14.8	14.8
IC7007		
1	0	0
2	0	0
3	0	0
4	2.8	2.8
5	3.2	3.2
IC7008		
1	0	0
2	3.1	3.1
3	3.1	3.1
4	3.1	3.1
5	0	0
6	0	0
7	0	0
8	0	0
9	3	3
10	0	0
11	0.4	0.4
12	1.4	1.4
13	1.4	1.4
14	0.4	0.4
15	1.4	1.4

MODE PIN NO.	REC	PLAY
16	3.2	3.2
Q7001		
1	0.9	0.9
2	0	0
3	4.7	4.8
4	0.5	4.2
5	4.8	4.8
6	4.8	4.8
Q7003		
1	0.9	0.9
2	0.5	0.5
3	3.2	3.2
4	2.6	2.6
5	3.2	3.2
6	3.2	3.2
Q7005		
1	0.9	0.9
2	0	0
3	4.8	4.8
4	4.2	4.2
5	4.8	4.8
6	4.8	4.8
Q7011		
1	0.8	0.8
2	1.4	1.4
3	4.8	4.8
4	2.2	2.2
5	2.8	2.8
6	2.8	2.8
Q7013		
1	0.9	0.9
2	1.4	1.4
3	4.8	4.8
4	2.3	2.3
5	2.9	2.9
6	2.9	2.9
Q7015		
1	0.9	0.9
2	1.4	1.4
3	4.8	4.8
4	2.3	2.3
5	2.9	2.9
6	2.9	2.9
Q7017		
E	-10.3	-10.3
C	0	0
B	-9.8	-9.8
Q7018		
E	-9.3	-9.3
C	-14.7	-14.7
B	-9.8	-9.8
Q7019		
E	-9.8	-9.8
C	-1.3	-1.3
B	-9.3	-9.3
Q7020		
E	-9.9	-9.9
C	-14.4	-14.4
B	-10.3	-10.3
Q7022		
E	0	0
C	2.9	2.9
B	0	0

MODE PIN NO.	REC	PB
IC8001		
1	3.1	3.1
2	3.1	3.1
3	3.1	0
4	3.1	0
5	3.1	0
6	3.1	0
7	3.1	0
8	3.1	3.1
9	3.1	3.1
10	0	0
11	0	0
12	0	0
13	0	0
14	0	0
15	0	0
16	0	0
17	0	0
18	0	0
19	3.1	3.1
20	1.5	1.5
21	1.5	1.4
22	1.6	1.6
23	0	0
24	0	0
25	0	0
26	0	0
27	0	0
28	1.6	3.1
29	3.1	3.1
30	3.1	0
31	3.1	0
32	3.1	0
33	3.1	0
34	3.1	0
35	3.1	0
36	3.1	3.1
37	0	0
38	3	0
39	3	3.1
40	3	0
41	3	0
42	3.2	3.1
43	3.1	3.1
44	3.1	0
45	0	0
46	0	0
47	0	0
48	0	0
49	0	0
50	0	0
51	0	0
52	0	0
53	0	0
54	0	0
55	3.1	3.1
56	0	0
57	0	0
58	0	0
59	0	0
60	0	0
61	0	0
62	0	0
63	0	0
64	0	0
65	0	0
66	0	0
67	0	0
68	0	0
69	3	3.1
70	3	0
71	3	0
72	0	0
73	3.1	3.1
74	3.1	0
75	3	0
76	3	0
77	3.1	0
78	3.1	0

MODE PIN NO.	REC	PB
79	3.1	0
80	3	3.1
81	0	0
82	0	0
83	0	0
84	0	0
85	3.1	3.1
86	0	0
87	3.1	3.1
88	3.1	3.1
89	3.1	0
90	0.6	0
91	0	0
92	1.6	1.6
93	3.1	3.1
94	0	0
95	3.1	3.1
96	0.6	0.6
97	3.2	3.1
98	3.2	3.2
99	3.1	3.1
100	3.1	3.1
101	3.1	0
102	3.1	0
103	3.1	0
104	3.1	0
105	3.1	0
106	3.1	0
107	3.1	0
108	3.1	3.1
109	0	0
110	3.1	0
111	3	0
112	3	3.1
113	3	0
114	0	0
115	2.7	3.1
116	3.1	0
117	0	3.1
118	0.9	3.1
119	0.7	3.1
120	0.8	3.1
121	1.4	3.1
122	0.8	3.1
123	1.2	3.1
124	3	3.1
125	1.3	3.1
126	0	0
127	3.1	3.1
128	3.1	3.1
129	3.1	3.1
130	3.1	3.1
131	3.1	3.1
132	1.6	3.1
133	0.6	3.1
134	0.6	3.1
135	0.6	3.1
136	1.6	1.6
137	0	0
138	0	0
139	1.4	1.4
140	3	0
141	3	0
142	3	0
143	3	0
144	0	0
IC8002		
1	3.1	3.1
2	3	2
3	3	2
4	0	2
5	3	2
6	0	0
7	3.1	1.9
8	3.1	1.9
9	3.1	3.1
10	3.1	3.1
11	3.1	3.1
12	1.4	1.4

MODE PIN NO.	REC	PB
13	3	3
14	3.1	3.1
15	0	0
16	0	0
17	0	0
18	1.4	1.4
19	0	0
20	3	3
21	3.1	0
22	3	1
23	3	2.9
24	3	1
25	0	0
26	3	0.9
27	3	0.9
28	3	0.9
29	3	0.9
30	3.1	3.1
31	0	0
32	3	1.8
33	3	1.4
34	3	1.6
35	3	1.7
36	3.1	3.1
37	3.1	3.1
38	3.1	3.1
39	0.9	0.9
40	0.9	0.9
41	3.1	3.1
42	0	0
43	0	0
44	3.1	3.1
45	3.1	3.1
46	3	1.6
47	3	1.8
48	3	1.5
49	3	1.7
50	0	0
51	3.1	3.1
52	3	2
53	3.1	2
54	3.1	2
55	3.1	2
56	0	0
57	3	2
58	3	2
59	3.1	3.1
60	3.1	3.1
61	3.1	3.1
62	3.1	3.1
63	3.1	3.1
64	3.1	3.1
65	0	0
66	3.1	0
67	3.1	3.1
68	3.1	3.1
69	3.1	3.1
70	3.1	3.1
71	3.1	1
72	3	0.9
73	3	0.9
74	3	2
75	0	0
76	3	2
77	3	1.8
78	3	1.8
79	3.1	1.8
80	3.1	3.1
81	0	0
82	3.1	1.6
83	3	1.5
84	3	1.6
85	3	1.6
86	3.1	3.1
87	0	3
88	3.1	3.1
89	0	3.1
90	0	0
91	3.1	3.1

MODE PIN NO.	REC	PB
92	0	0
93	3	3.1
94	3.1	3.1
95	3.1	3.1
96	3	1.6
97	3	1.6
98	3	1.4
99	3	1.9
100	3	0
IC8003		
1	0	0
2	1.7	2
3	2	2
4	2	2.1
5	2	2
6	2	2
7	3	2
8	3.1	2
9	3	0.9
10	0	0
11	3.1	3.1
12	0	3
13	0	0
14	3.1	0
15	3	3.1
16	3	1
17	3	2.9
18	3	1.9
19	3	2
20	3	2
21	3	2
22	3	2
23	3	1.8
24	3	0
25	1.7	1.8
26	3	3.1
27	0	0
28	3.1	3.1
29	1.6	1.6
30	3	1.7
31	3	1.5
32	3	1.8
33	3	1.6
34	3	1.8
35	3	1.6
36	3	1.6
37	3.2	3.2
38	3	1.7
39	3	1.7
40	3	1.7
41	3	1.6
42	3	1.4
43	3	1.4
44	3	1.9
45	3	0.8
46	0	0
47	3.2	3.2
48	3.1	1.9
IC8006		
1	0	0
2	3.2	3.2
3	3.2	3.2
4	3.2	3.2
5	3.2	3.2
6	0	0
7	0	0
8	0	0
9	3.2	3.2
10	0	0
11	3.1	3.1
12	0	0
13	0	0
14	0	0
15	3.2	3.2
16	3.2	3.2
IC8007		
1	1.7	1.6
2	1.6	1.5
3	0	0

MODE PIN NO.	REC	PB
4	0	0
5	3.1	3.1
6	1.6	1.6
7	1.6	1.6
8	3.1	3

<CCD>

MODE PIN NO.	EE
IC5301	
1	-7.3
2	-7.3
3	0
4	0
5	0
6	0
7	11.2
8	14.9
9	0
10	6.9
11	-7.8
12	6.8
13	1.6
14	1.2
Q5301	
E	10.4
C	14.8
B	11.2

<C-VF BL>

MODE PIN NO.	EE
Q7560	
1	0
2	3
3	0
4	4.8
5	0
6	0
Q7562	
1	0.6
2	1.2
3	1.6
4	0.5
5	1.2
6	1.2

<MONITOR>

MODE PIN NO.	EE
IC7501	
1	-
2	-
3	-
4	-
5	-
6	-
7	-
8	-
Q7501	
E	0
C	4.4
B	0.4
Q7502	
E	0
C	4.4
B	0.4
Q7503	
E	4.6
C	4.5
B	0
Q7504	
E	0
C	0
B	0.7
Q7507	
E	3.2
C	0
B	3

<E. VF>

MODE PIN NO.	EE
IC7001	
1	2.1
2	4.9
3	2
4	0
5	2.1
6	1.3
7	2
8	6
9	4.2
10	0
11	1.9
12	4.5
13	2.8
14	1.7
15	1.8
16	1.6
Q7001	
E	0
C	4.4
B	0.5
Q7002	
E	2.8
C	-24.6
B	2.3
Q7003	
E	-24
C	-34.3
B	-24.6