HITACHI

TRK-8190E, E(BS)

SERVICE MANUAL

No. 1328

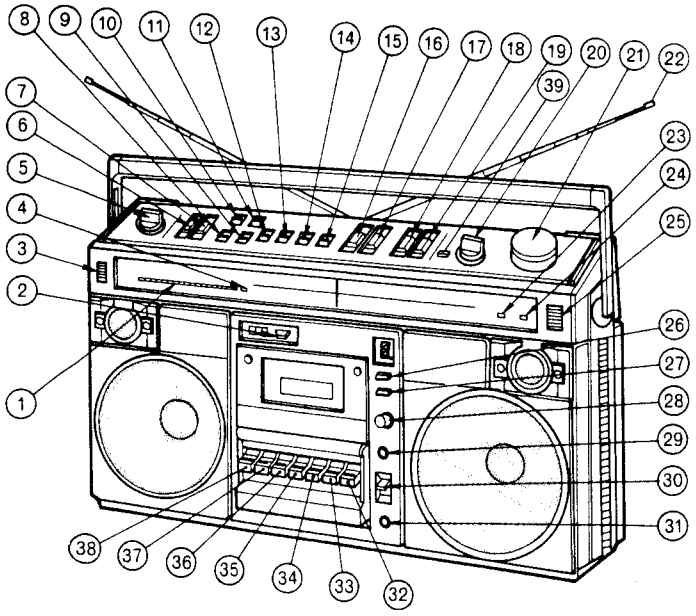

KEY TO ILLUSTRATIONS

1. LED LEVEL INDICATOR
2. TAPE COUNTER
3. BUILT-IN MICROPHONE (LEFT)
4. DOLBY NR INDICATOR
5. FUNCTION SELECTOR
6. RECORDING LEVEL CONTROL (LEFT)
7. RECORDING LEVEL CONTROL (RIGHT)
8. RECORDING MUTE SWITCH
9. DOLBY NR SWITCH
10. AUTO/MANUAL RECORDING CHANGE-OVER SWITCH
11. MODE SWITCH
12. TAPE SELECTOR SWITCH (BIAS)
13. TAPE SELECTOR SWITCH (EQUALIZER)
14. LEVEL INDICATOR SELECTOR
15. RIF/AFC SWITCH
16. BASS CONTROL
17. TREBLE CONTROL
18. VOLUME CONTROL (LEFT)
19. VOLUME CONTROL (RIGHT)
20. BAND SELECTOR
21. TUNING CONTROL
22. TELESCOPIC ANTENNA (AERIAL)
23. FM STEREO INDICATOR
24. OPERATION INDICATOR (For E)
24. AC POWER INDICATOR (For E(BS))
25. BUILT-IN MICROPHONE (RIGHT)
26. PROGRAM SWITCH
27. PROGRAM RESET SWITCH
28. MIXING VOLUME CONTROL
29. MIXING SOCKET
30. TIMER STAND BY BUTTON
31. HEADPHONE SOCKET
32. PAUSE BUTTON
33. STOP BUTTON
34. FAST FORWARD/CUE BUTTON
35. PLAYBACK BUTTON
36. REWIND/REVIEW BUTTON
37. RECORD BUTTON
38. EJECT BUTTON
39. LOUDNESS SWITCH

SPECIFICATIONS

GENERAL SECTION

Semi-conductors :	IC's: 11 Transistors: 33 Diodes: 28 LED: 18 Varicap: 1 Varistors : 2
Power(Mains) Supply:	AC: 220V, 50Hz [For E] 240V, 50Hz [For E (BS)] DC: 13.5V (IEC R20 x 9) Car: Use car battery adaptor
Power (Mains) Consumption:	24W
Dimensions:	540(W) x 304(H) x 166(D) mm
Weight:	7.6 kg (with batteries)
Power output:	8W/CH (Max.), 5W/CH (THD 10%)
Speaker:	16 cm, 3.2 ohms x 2 5 cm, 4 ohms x 2

TUNER SECTION

Circuit System:	FM/SW/MW/LW 4-band superheterodyne
Tuning Range:	FM: 87.5 to 108 MHz SW: 6.0 to 18 MHz MW: 530 to 1605 kHz LW: 150 to 350 kHz
Sensitivity:	FM: 10 dB (pra.) 2dB (max.) SW: 25 dB (pra.) 20 dB (max.) MW: 42 dB (pra.) 30 dB (max.) LW: 52 dB (pra.) 40 dB (max.)
Intermediate Frequency:	FM: 10.7 MHz SW/MW/LW: 468 kHz
Antennas (Aerials):	FM/SW: Telescopic antenna or External antenna MW/LW: Ferrite-core antenna

TAPE RECORDER

Tape:	Cassette tape (C-30, 60, 90)
Tape Speed:	4.75 cm/s
Recording System:	AC bias, 57 kHz
Erasing System:	AC erasing
Frequency Response:	Normal: 50 ~ 12,000 Hz CrO_2 : 50 ~ 14,000 Hz
S/N (Signal to Noise Ratio):	50 dB (Dolby NR OFF) 60 dB (Dolby NR ON)
Cross Talk:	50 dB
Erase Ratio:	65 dB
Input Sensitivity and Impedance:	Microphone: 0.4 mV, 500 ohms Phone: 3 mV , 50 Kohms Record/Playback(DIN): 6mV, 12 Kohms
Output Level and Impedance:	Record/Playback(DIN): 775 mV, 5 Kohms Ext . speaker: 3.2 ohms
Fast Forward or Rewinding Time:	110 sec (Using C-60)
Distortion:	1.5 %
Motor:	DC micromotor

CASSETTE TAPE RECORDER WITH FM/SW/MW/LW RADIO

www.manualscenter.com

SAFETY PRECAUTION

The following precautions should be observed when servicing.

1. Since many parts in the unit have special safety related characteristics, always use genuine Hitachi's replacement parts. Especially critical parts in the power circuit block should not be replaced with other makes.
   Critical parts are marked with ⚠ in the schematic diagram and circuit board diagram.
2. Before returning a repaired unit to the customer, the service technician must thoroughly test the unit to ascertain that it is completely safe to operate without danger of electrical shock.

DISASSEMBLY

1. Head Cover

Lift up the head cover in the direction of arrow.

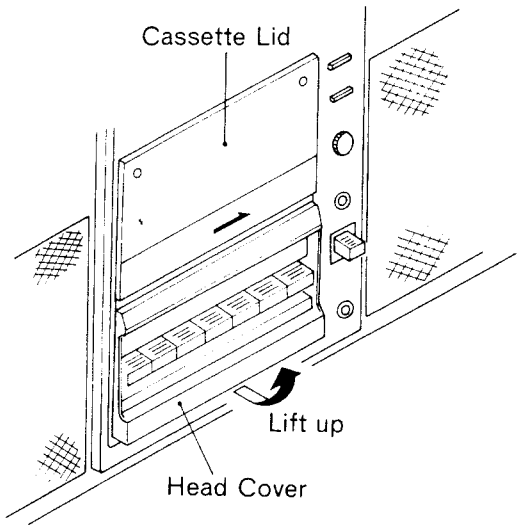

2. Cassette Lid

Press the eject button to release the engagement of the mechanism and cassette lid. Then push the both arms of cassette lid in the direction of arrow.

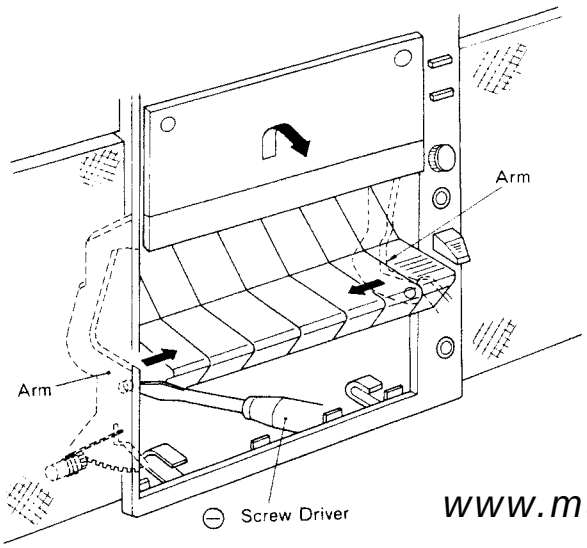

3. Rear Case

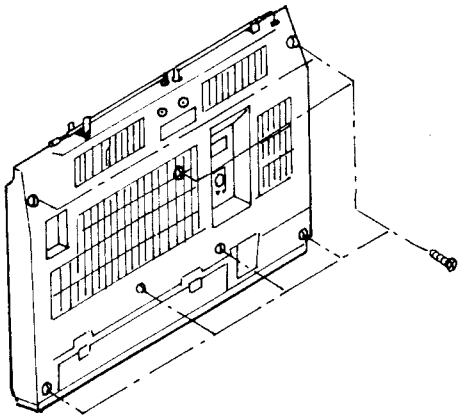

4. Main Chassis

Remove nine knobs (Function, Record level, Bass, Treble, Volume, Band, Tuning).

Press the eject button to release the engagement of the mechanism and cassette lid. Then lift up the battery side of the main chassis.

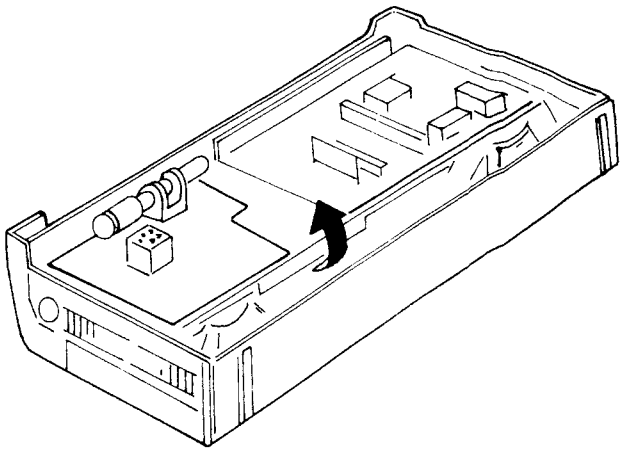

www.manualscenter.com

5. Switch and Control PC Board, Loudness PC Board

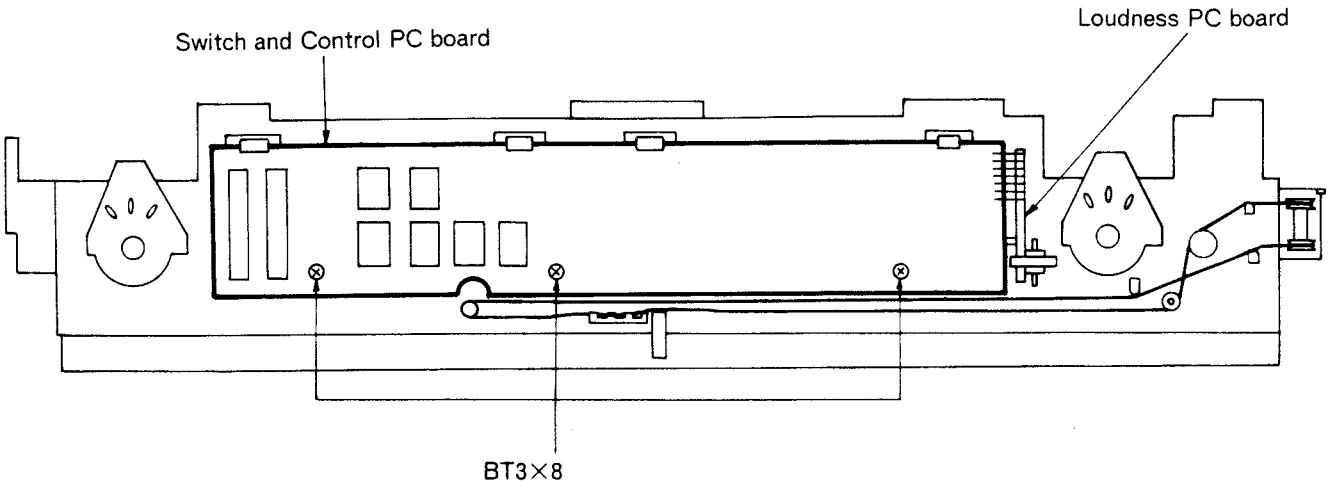

www.manualscenter.com

6. Cassette Chassis, LED Level Indicator PC Board, DRPS PC Board

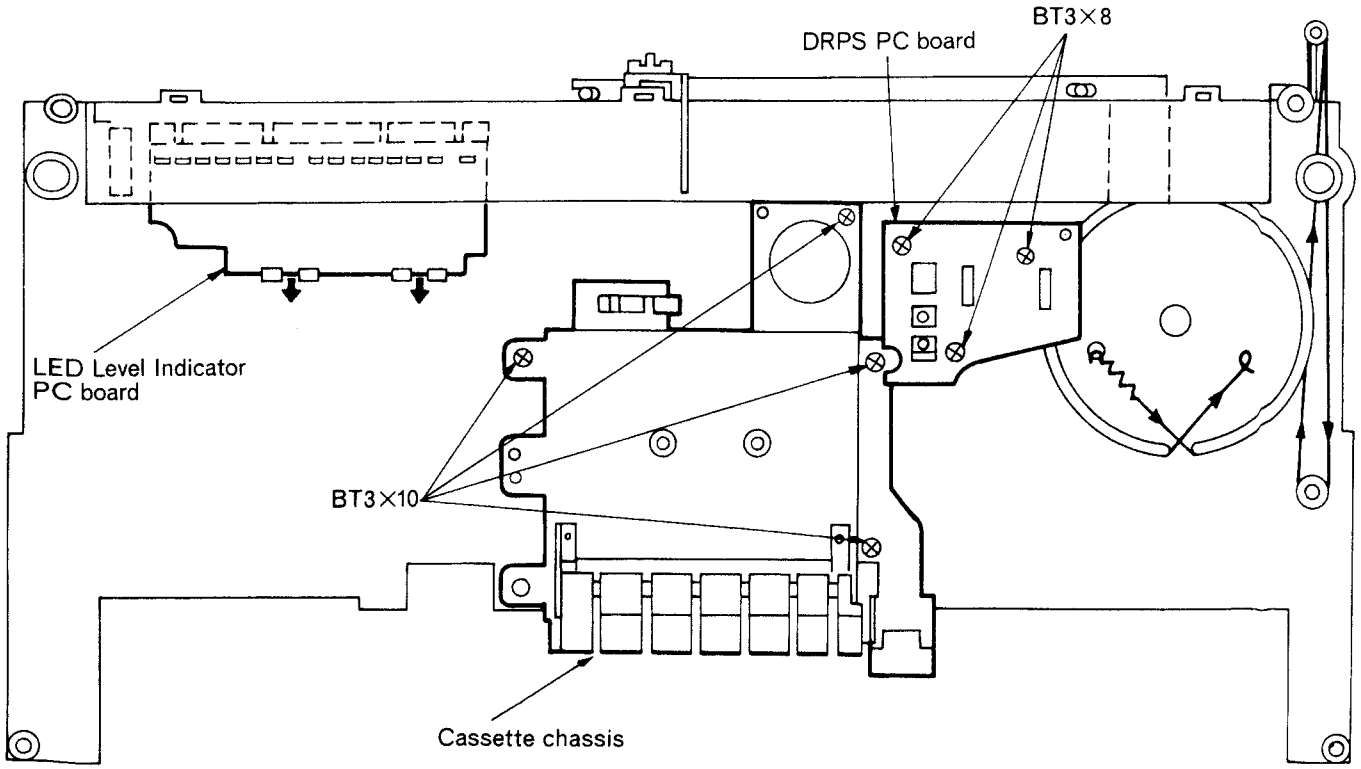

7. Tuner PC Board, Deck/AF/Power PC Board

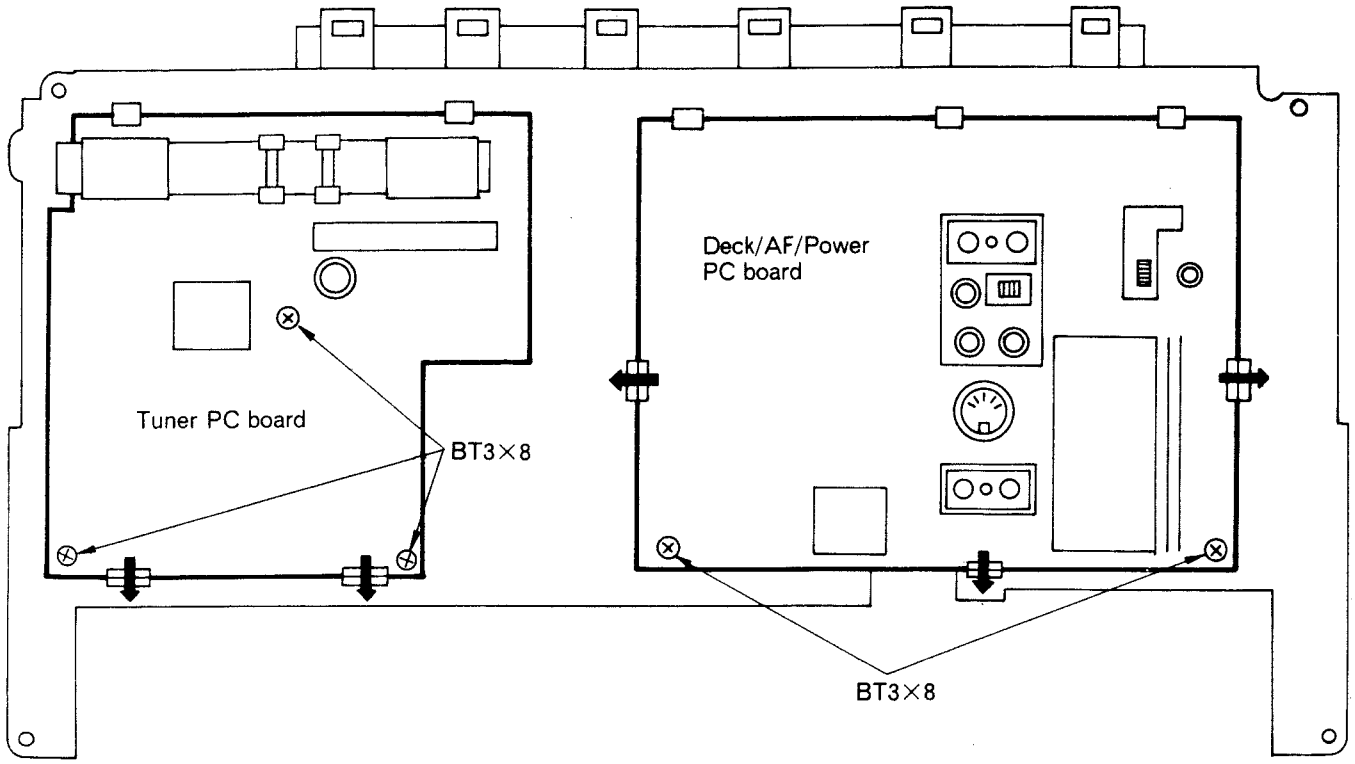

DIAL CORD STRINGING

www.manualscenter.com

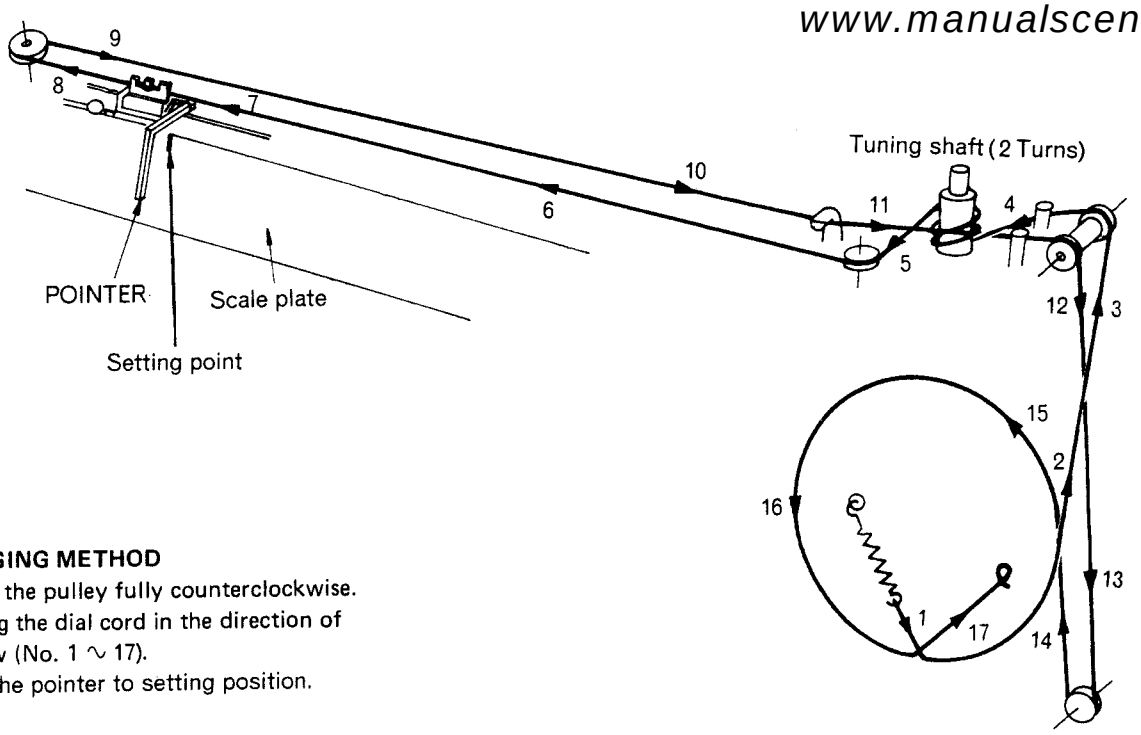

STRINGING METHOD

1. Turn the pulley fully counterclockwise.
2. String the dial cord in the direction of arrow (No. 1 ∿ 17).
3. Set the pointer to setting position.

LUBRICATION

Lubricate one or two drops of machine oil to rotating point or lubricate grease to sliding point. Lubricate the respective parts listed below once every 1000 hours or once a year under normal conditions of use. Avoid oiling them excessively, or rotation may become irregular because of oil splashes.

Lubrication	Oil or grease
Motor shaft bearing	Oil
Capstan shaft bearing	
Pressure roller bearing	

ADJUSTMENT

TUNER SECTION

Dummy antenna (aerial)

Rg : SG's output impedance

1. FM IF adjustment

Setting:

- Function selector: Radio
- Mode switch: Mono
- Band selector: FM

www.manualscenter.com

Connection:

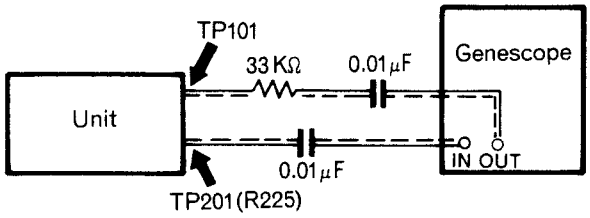

Adjustment:

Genescope	Dial pointer position	Adjust	Reading	Remarks
10.7 MHz	Highest	T202	—	Turn T202 fully counterclockwise.
		T101 T201	Maximum 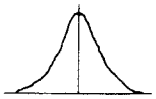 fc	1) fc: Specified center frequency of the ceramic filter. 2) Reduce the level of the genescope to make one waveform.
		T202	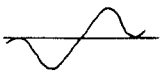	Adjust T202 for a symmetrical sinewave (S curve) output.

2. FM RF (Covering & Tracking) adjustment

Setting:

- Function selector: Radio
- Mode switch: Mono
- Band selector: FM

Connection:

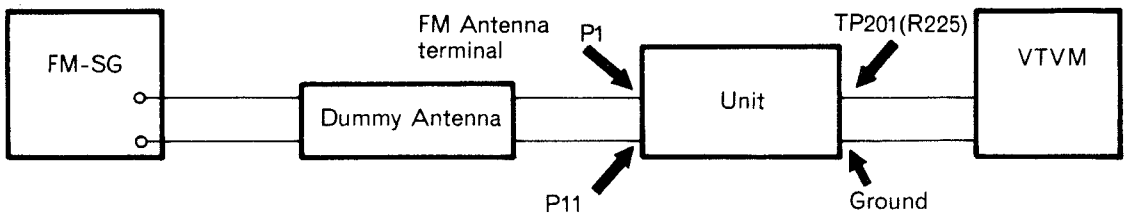

Adjustment:

	Item	Signal generator		Dial pointer position	Adjust	Reading	Remarks
		Frequency	Modulation				
1	Covering	87.25 MHz (87.5 MHz*)	400 Hz 30%	Lowest	L103	Max.	
2		109 MHz		Highest	CT102		
3	Repeat 1 and 2.						—
4	Tracking	90 MHz	400 Hz 30%	90 MHz	L101	Max.	
5		106 MHz		106MHz	CT101		
6	Repeat 4 and 5.						

* For West Germany

3. AM IF adjustment

Setting:

- Function selector: Radio
- Band selector: MW

www.manualscenter.com

Connection:

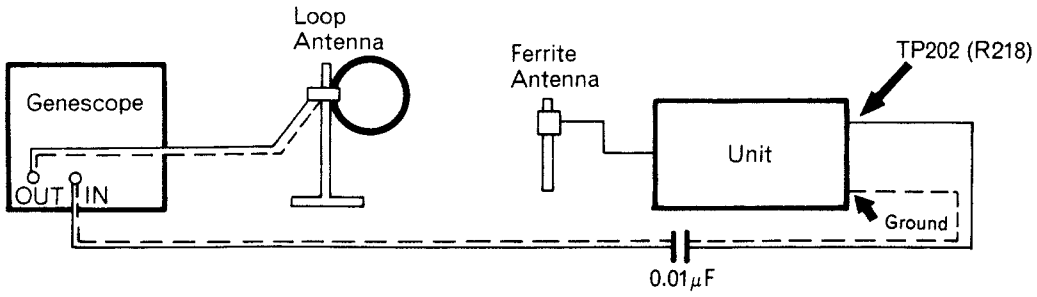

Adjustment:

Genescope		Dial pointer position	Adjust	Reading	Remarks
Frequency	Modulation				
468 kHz	–	Highest	T151, T204	Max.	–

4. SW RF (Covering & Tracking) adjustment

Setting:

- Function selector: Radio
- Band selector: SW

Connection:

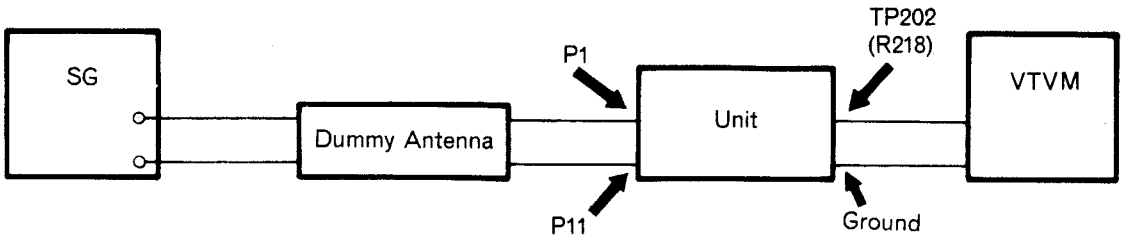

Adjustment:

	Item	Signal generator		Dial pointer position	Adjust	Reading	Remarks
		Frequency	Modulation				
1	Covering	5.8 MHz	400 Hz 30%	Lowest	L154	Max.	
2		18.5 MHz		Highest	CT154		
3	Repeat 1 and 2.						—
4	Tracking	6.5 MHz	400 Hz 30%	6.5 MHz	L151	Max.	
5		16 MHz		16 MHz	CT151		
6	Repeat 4 and 5.						

5. MW/LW RF (Covering & Tracking) adjustment

Setting:

- Function selector: Radio
- Band selector: MW or LW

www.manualscenter.com

Connection:

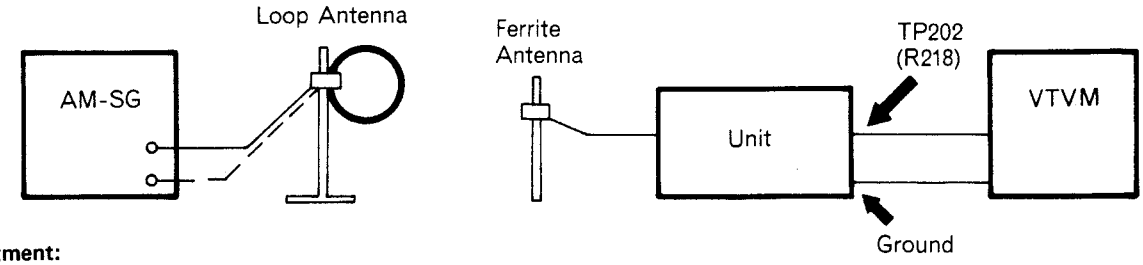

Adjustment:

1) MW

	Item	Signal generator		Dial pointer position	Adjust	Reading	Remarks
		Frequency	Modulation				
1	Covering	515 kHz	400 Hz 30%	Lowest	L155	Max.	
2		1650 kHz		Highest	CT155		
3	Repeat 1 and 2.						—
4	Tracking	600 kHz	400 Hz 30%	600 kHz	L152	Max.	
5		1400 kHz		1400 kHz	CT152		
6	Repeat 4 and 5.						

2) LW

	Item	Signal generator		Dial pointer position	Adjust	Reading	Remarks
		Frequency	Modulation				
1	Covering	145 kHz	400 Hz 30%	Lowest	L156	Max.	
2		360 kHz		Highest	CT156		
3	Repeat 1 and 2.						—
4	Tracking	160 kHz	400 Hz 30%	160 kHz	L153	Max.	
5		330 kHz		330 kHz	CT153		
6	Repeat 4 and 5.						

6. FM MPX (Multiplex) adjustment

Setting:

- Function selector: Radio
- Band selector: FM
- Mode switch: Stereo

Connection:

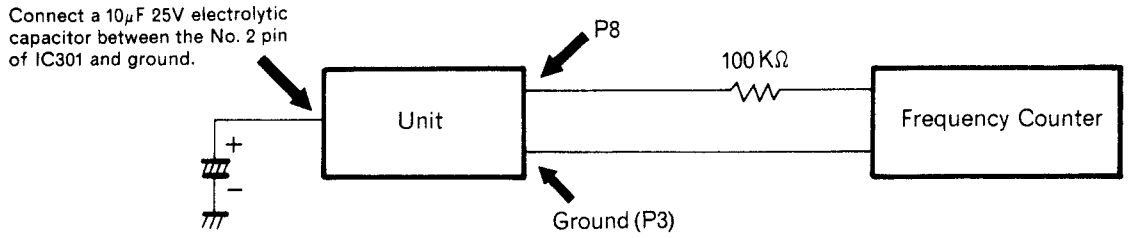

Adjustment:

Adjust	Reading	Remarks
RT302	19 kHz ± 100 Hz	–

7. FM separation adjustment

Setting:

www.manualscenter.com

- Function selector: Radio
- Band selector: FM
- Mode switch: Stereo

Connection:

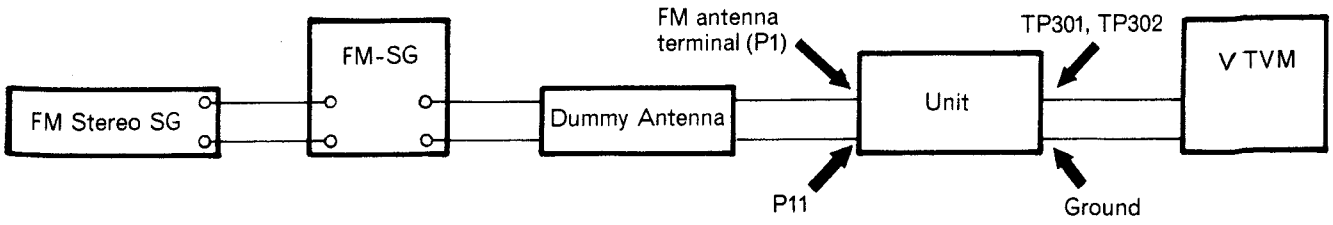

Adjustment:

Signal generator		Dial pointer position	Adjust	Reading	Remarks
Frequency	Modulation				
98 MHz 60 dB	L + R (1kHz): 180mV, 30% mod. Pilot (19kHz): 20mV, 10% mod.	98 MHz	RT301	Min.	1) After feeding in of R channel and pilot signals, adjust RT301 for a minimum L channel output. 2) Optimize RT301 so that the leak level of the L channel signal is equal to that of the R channel signal.

8. FM tuning level adjustment

Connect the VTVM to test point TP203. Supply the sweep signal to FM antenna terminal and adjust T203 so that the output is maximum.

TAPE RECORDER SECTION

The following adjustments shall be performed in the sequence stated after the heads, the pressure roller and the capstan shaft were cleaned with a cleaning stick moistered in alcohol.

www.manualscenter.com

1. Tape speed adjustment (motor speed)

Setting : Playback mode

Connections :

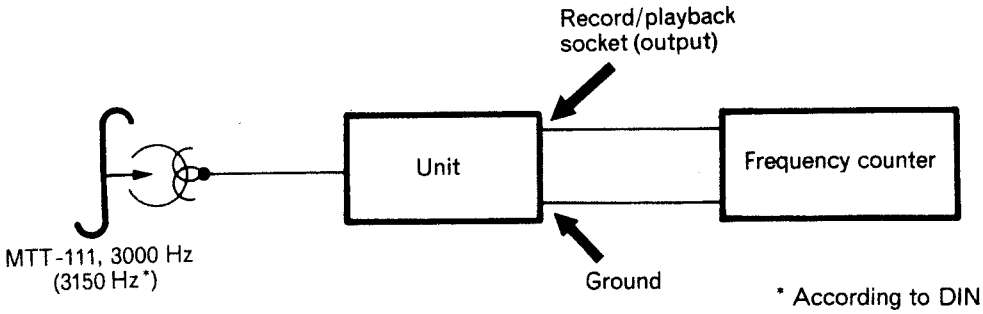

* According to DIN 45 500.

Adjustment : Warm-up the unit for approx. 20 minutes. Then playback the Test Tape MTT-111, 3000 Hz (3150 Hz*) and measure the speed deviation with the frequency counter. If required, adjust the semi-variable resistor in the motor until the frequency counter shows 3000 Hz $^{+90}_{-10}$ Hz (3150 Hz*). The measurement shall be performed at the middle of the tape.

2. Head azimuth adjustment

Setting : Playback mode

Connections :

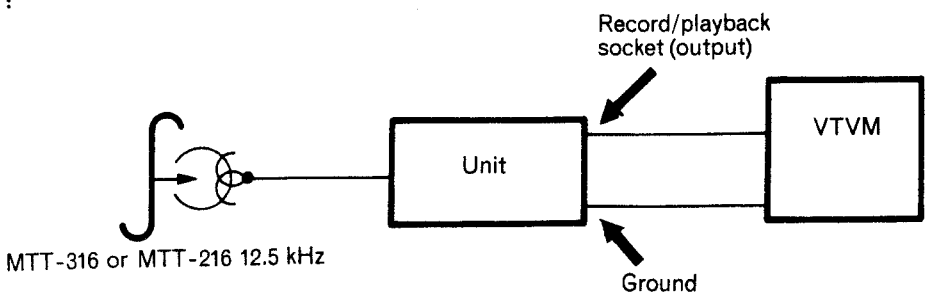

Adjustment : Playback the Test Tape (MTT-316 or MTT-216, 12.5 kHz) and adjust the azimuth adjusting screw until maximum output is obtained.

3. Playback gain and level indicator adjustment

Setting : Playback mode

● Tape selector (EQ) : Normal

Connection :

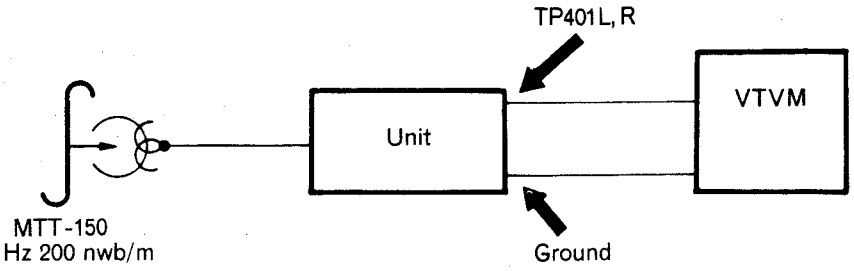

Adjustment : Playback the Dolby Calibration Tape (MTT-150, 400 Hz 200 nwb/m) and adjust RT402 L/R so that the voltage at the test points TP401 L/R is 0.775V (0 dBm). Then adjust RT404 L/R so that the Level Indicator Lamp (0 dB) lights up.

4. Adjustment of bias leakage

Setting : Recording mode

● Tape selector (Bias) : CrO_2

Connection :

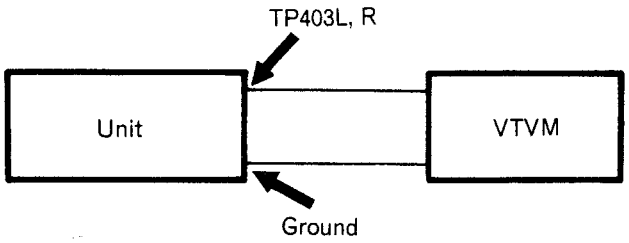

Adjustment : Set the unit to the recording mode. Adjust L401L, R so that outputs at test points TP403L, R are minimum.

5. Adjustment of bias current

Setting : Recording mode

● Tape selector (Bias) : Normal

● Tape selector (EQ) : Normal

● RT403L/R : Center position

www.manualscenter.com

Connection :

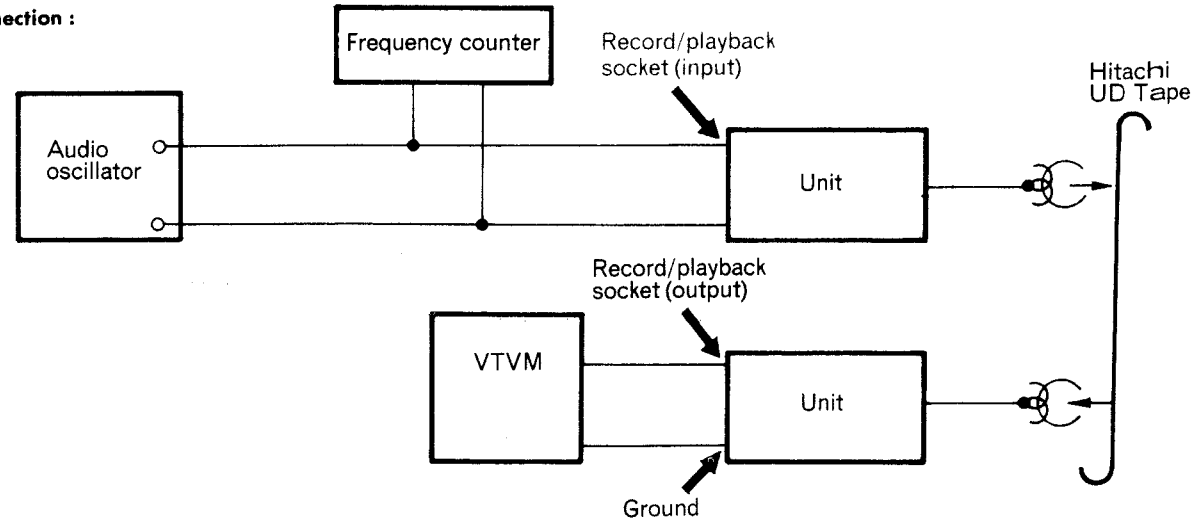

Adjustment :

1) Adjust RT401L/R to center position.
2) Next, turn L402L/R fully clockwise.
3) Record a 1 kHz and a 12.5 kHz signal with a level of 0 dB —20 dB (at test point TP401L/R) on Hitachi UD tape. Then playback this tape and adjust RT401L/R so that the output difference is within ±2 dB.

6. Recording/playback output adjustment

Setting : Recording/playback mode

- Tape selector (Bias) : Normal
- Tape selector (EQ) : Normal

Connection :

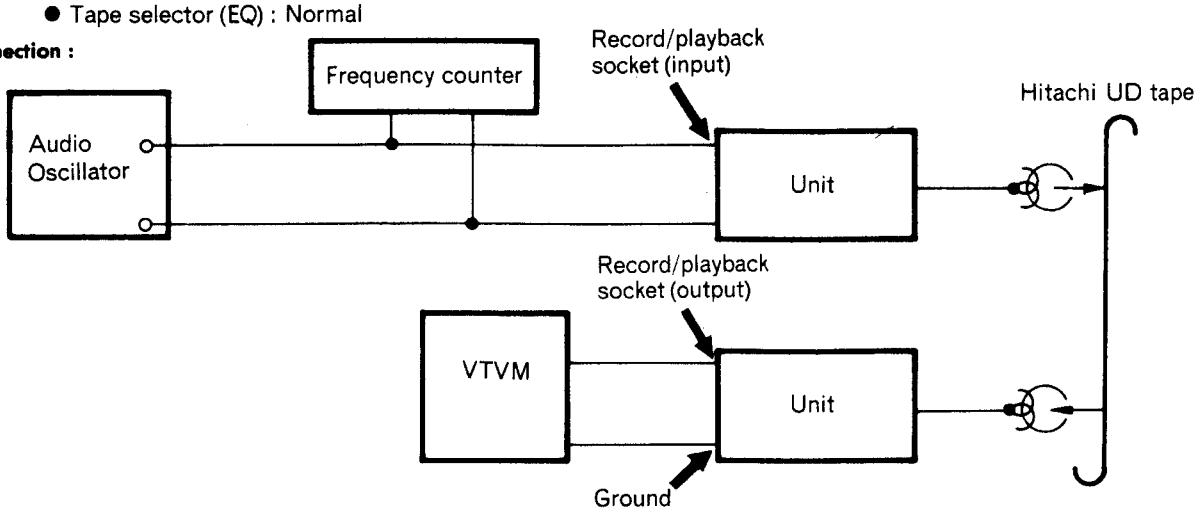

Adjustment : Record a 400 Hz signal (0 dB) on Hitachi UD tape. Then playback this tape and adjust RT403L/R so that the playback output is 0 dB±1 dB.

7. Dolby NR check

Setting : Recording mode

Connection :

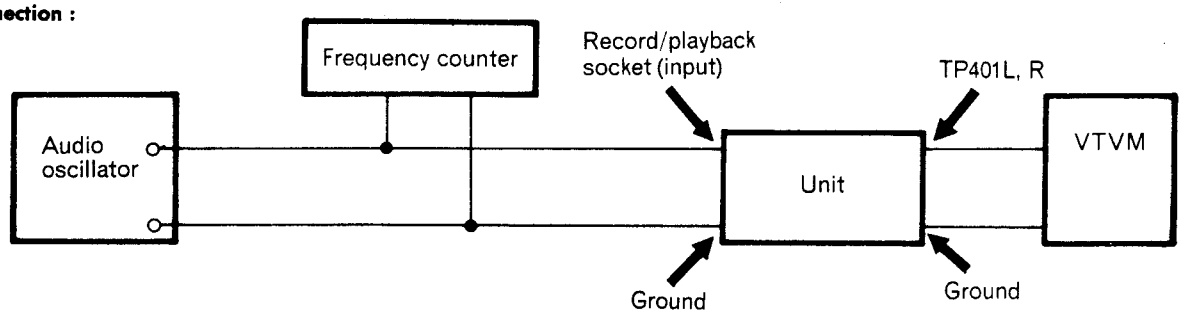

Adjustment :

Set the unit to the recording mode. Supply a 5 kHz signal to the Record/playback socket (input) to obtain the level of −30.4 dBm±0.1 dB at test points TP401L, R. Confirm that the level is boosted by 8±0.2 dB when the Dolby NR switch is set to ON.

8. Adjustment of the DRPS operation level

Setting : Playback mode

www.manualscenter.com

Connection :

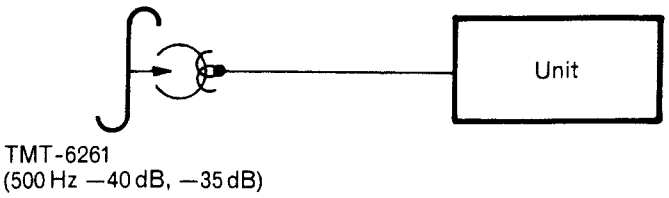

TMT-6261
(500 Hz −40 dB, −35 dB)

Adjustment :

Load the test tape TMT-6261 (500 Hz −40 dB, −35 dB) and set the unit to the DRPS mode from the playback mode. Adjust RT701 so that the number displayed by the program indicator decreases by one when the level of the test tape changes from −35 dB to −40 dB.

INSPECTION

Mode	Item	Pressure or Torque
Playback	Pressure of pressure roller	350g ~ 500g
	Take-up torque	35g-cm ~ 50g-cm
	Supply reel back tension	3.0g-cm ~ 5g-cm
Rewind	Rewind torque	85g-cm ~ 120g-cm
Fast Forward	Fast Forward torque	85g-cm ~ 120g-cm

Microswitch Timing Adjustment

Move the switch holder in the direction of the arrow (⟷) and adjust so that the microswitch is turned ON when the middle idler is pressed against the reel disk during rewind (review) operation.

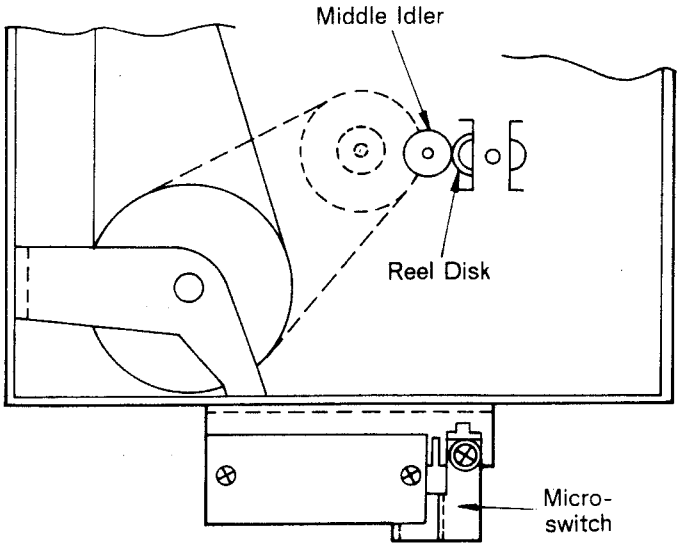

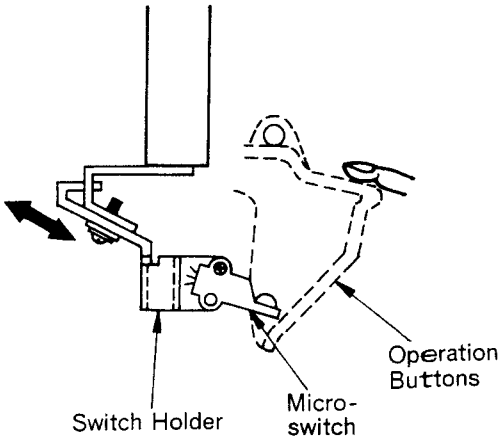

www.manualscenter.com

Adjustment Parts Location

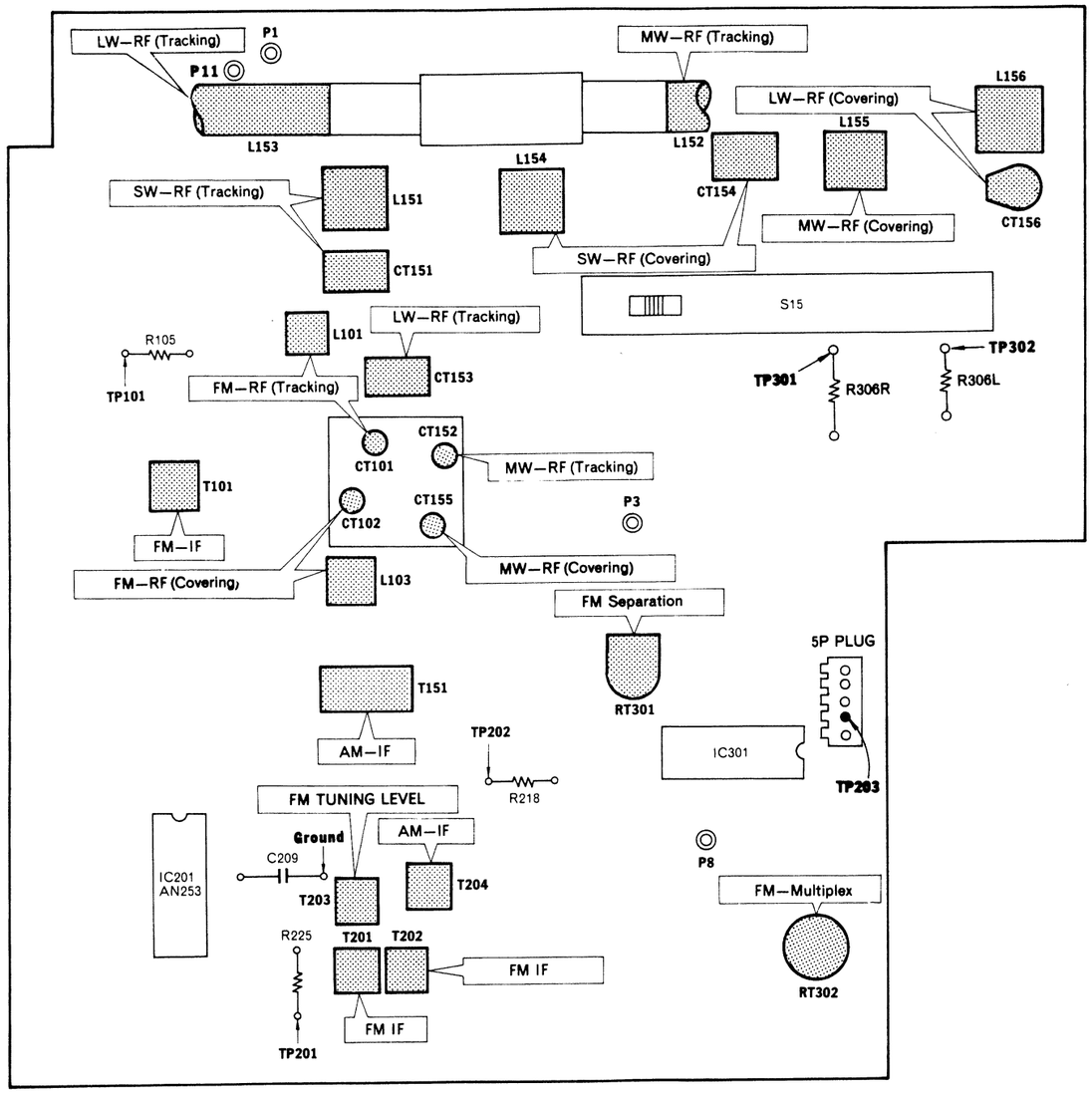

TUNER PC Board

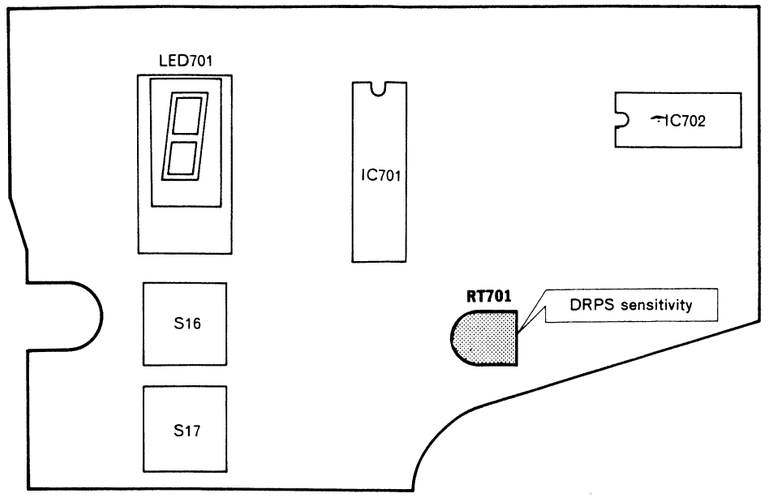

DRPS PC Board

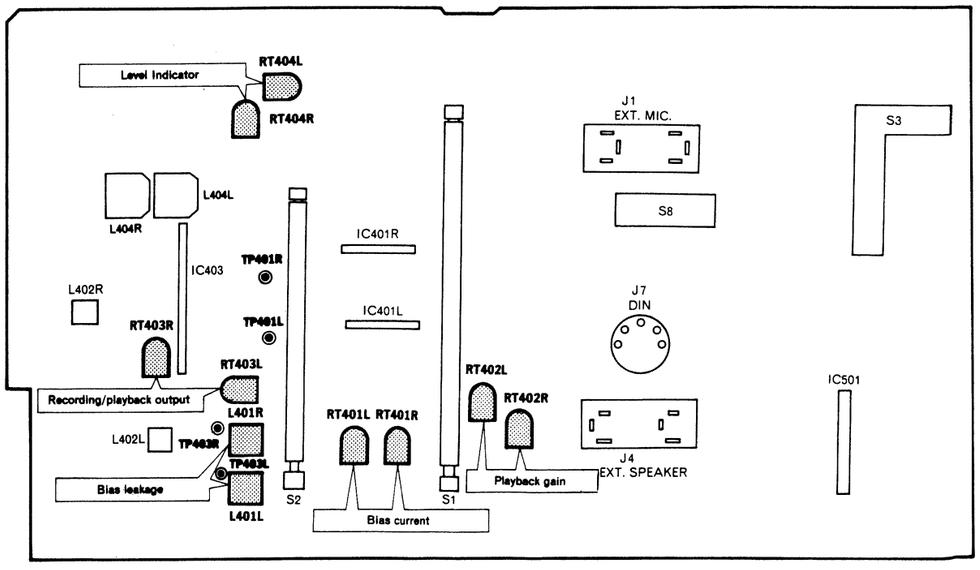

DECK/AF/POWER PC Board

www.manualscenter.com

SCHEMATIC DIAGRAM (TUNER SECTION)

D105 IS2473 FM LIMITER
Q101 2SC1674L FM RF AMP.
D102 IS2473 LIMITER
Q102 2SC1675L FM CONV.
D103 IS2790 AFC
Q103 2SC1675L FM OSC.
D104 IS2473 LIMITER
Q201 2SC1675L FM IF AMP.
IC201 AN253BB FM/AM IF AMP.
D203 1K60R FM METER RECT.
D204 1K60R AM DET.
D205, D206 1K60R METER FOR RECT.
D201, D202 1K60R FM DISCRI.

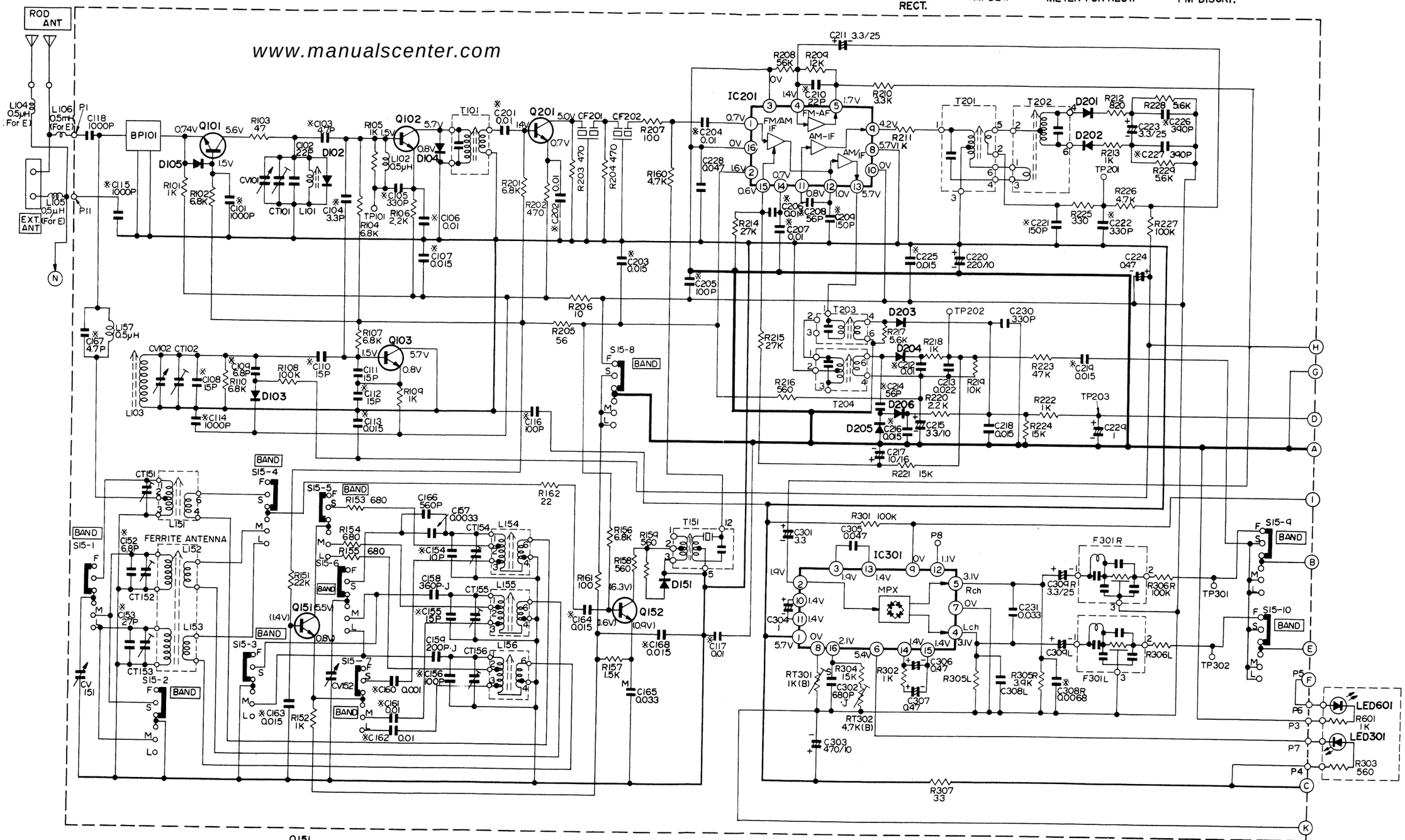

Q151 2SC1675L AM OSC

Q152 2SC1675L AM CONV.

D151 1K60R AGC

IC301 BA1330 MPX

LED601 GL-9PR2 OPERATION INDICATOR

LED301 GL-9PR2 FM STEREO INDICATOR

www.manualscenter.com

SCHEMATIC DIAGRAM (TAPE RECORDER/AF/POWER SECTION)

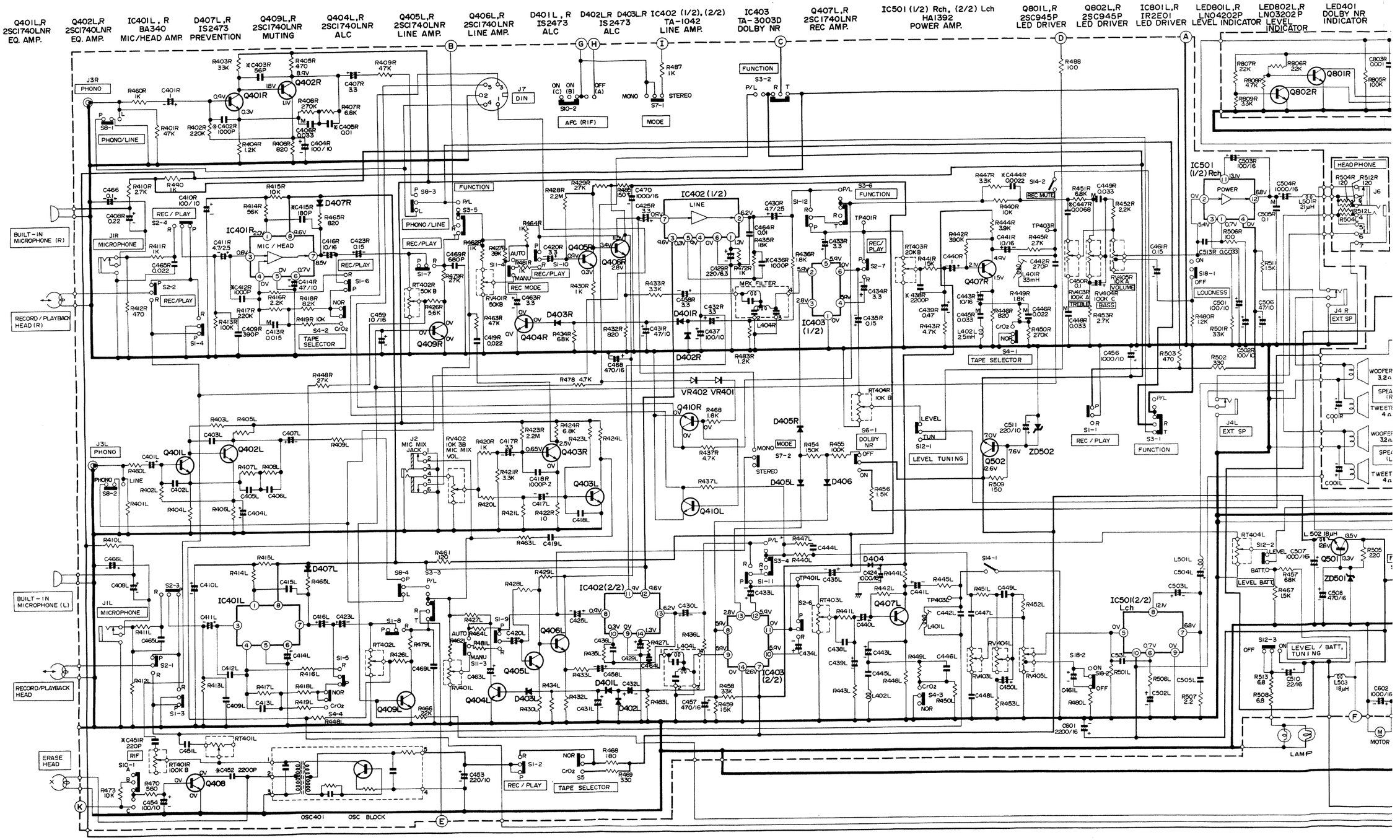

Q408 2SC1740 BIAS OSC.

Q403L,R 2SC1740LNR MIXING AMP.

VR401. VR402 MV-12 MUTING

Q410L,R 2SC1740 MUTING

D405L,R IS2473 SWITCHING

D406 IS2473 SWITCHING

D404 IS2473 VOLTAGE STAB.

Q502 2SC1162 VOLT. STAB.

ZD502 HZ7C VOLT. STAB.

Q501 2SC1162 VOLT. STAB.

ZD501 HZ12C VOLT. STAB.

D601 V0-3C PROTECTOR

LED701 LA4010A PROGRAM INDICATOR

IC701 HA12024 UP/DOWN COUNTER DECODER DRIVER

Q7 2SC SWIT

www.manualscenter.com

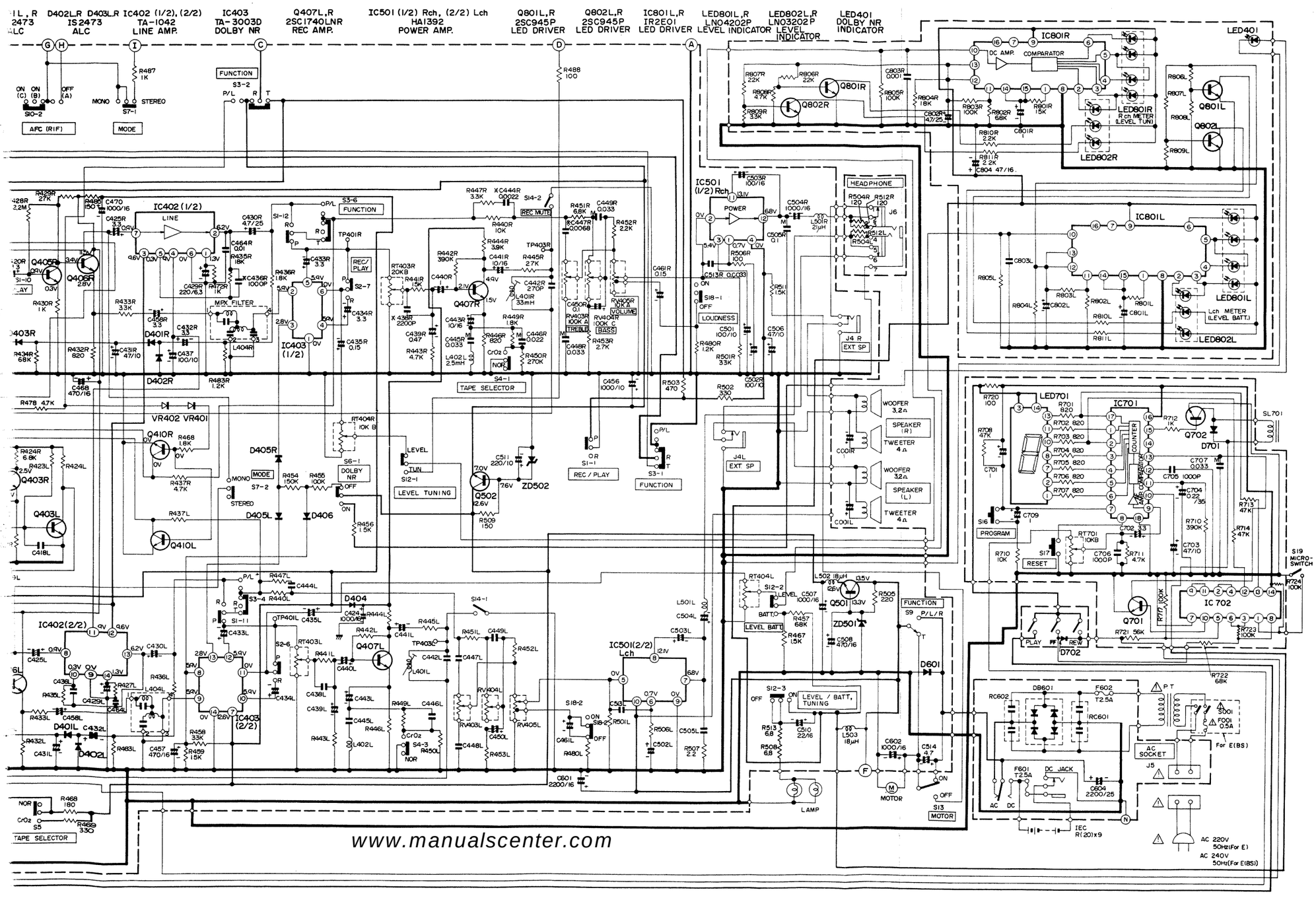

03L,R 740LNR NG AMP.	VR401, VR402 MV-12 MUTING	Q410L,R 2SC1740 MUTING	D405L,R IS2473 SWITCHING	D406 IS2473 SWITCHING	D404 IS2473 VOLTAGE STAB.	Q502 2SC1162 VOLT.STAB.	ZD502 HZ7C VOLT.STAB.	Q501 2SC1162 VOLT.STAB.	ZD501 HZ12C VOLT.STAB.	D601 VO-3C PROTECTOR	LED701 LA4010A PROGRAM INDICATOR	IC701 HA12024 UP/DOWN COUNTER DECORDER DRIVER	Q701 2SC945P SWITCHING	Q702 2SC1741R SWITCHING	D701 1K60R PROTECTOR	IC702 μPD4011 NAND GATE	D702 1K34A BACK CURRENT PROTECTOR	

Note

1. Voltage measured at base of chassis with minimum volume control and no signal.
2. Nomenclature of Resistors and Capacitors.

	Circuit No.	
R101 150 RS·1·K	Value	No indicated Ω(Ohm) M : 1000kΩ
	Tolerance	No indicated ±5% K : ±10% M : ±20%
	Wattage	No indicated ¼W
	Sort	No indicated Carbon film RC : Composition RW : Wire wound RS : Oxide metal film RN : Fixed metal film

	Circuit No.	
C101 0.001·M	Value	No indicated μF P : PF
	Tolerance	No indicated ±10% J : ± 5% M : ±20% Z : +80%, −20% D : ±0.5pF C : ±0.25pF
	Sort	Ceramic
		Electrolitic
		Mylar
		Polyester
		Styrol
C102 0.1/16	Voltage	No indicated 50WV

3. Be sure to make your orders of resistors and capacitors with value, voltage, tolerance and sort.
4. When replacing capacitors marked with ✻, use specified ones stated on parts list since required temperature characteristics.

CIRCUIT BOARD DIAGRAM

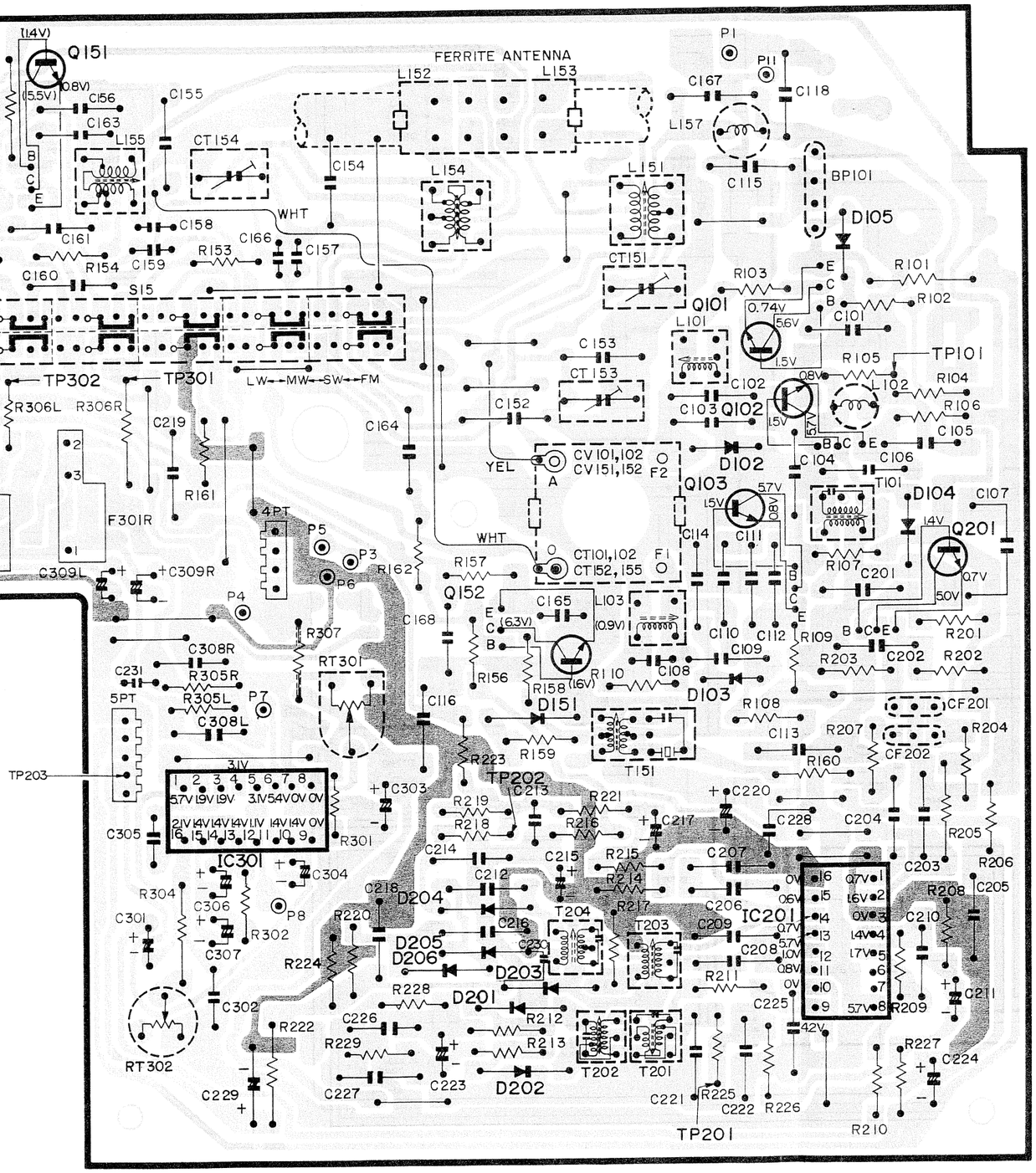

TUNER

www.manualscenter.com

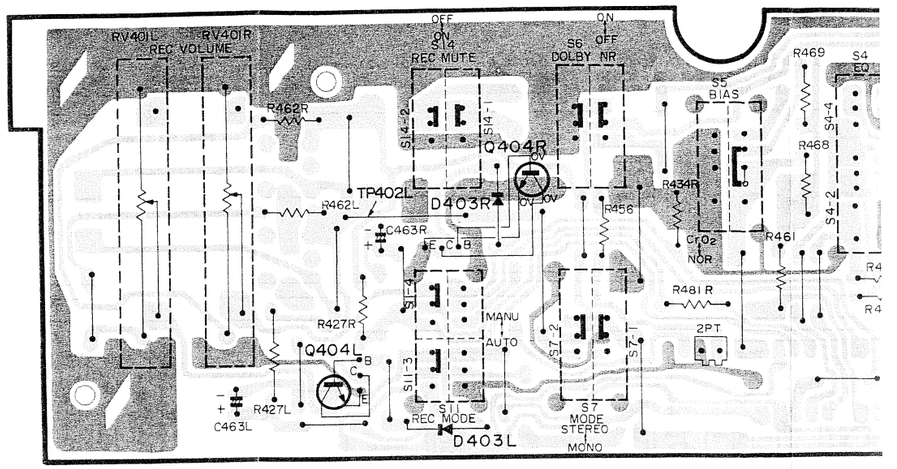

SWITCH/CONTROL

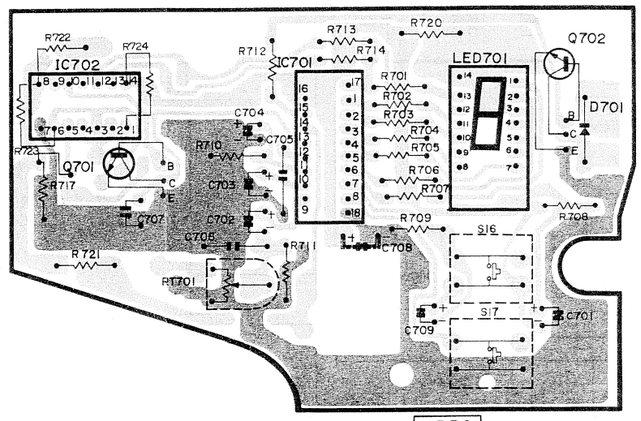

DRPS

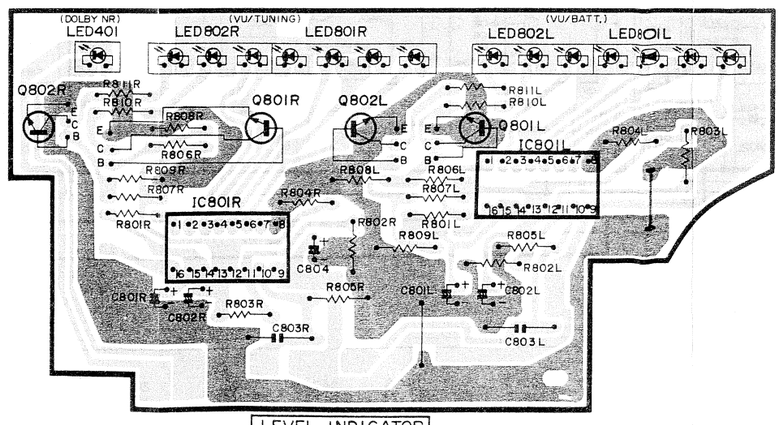

LEVEL INDICATOR

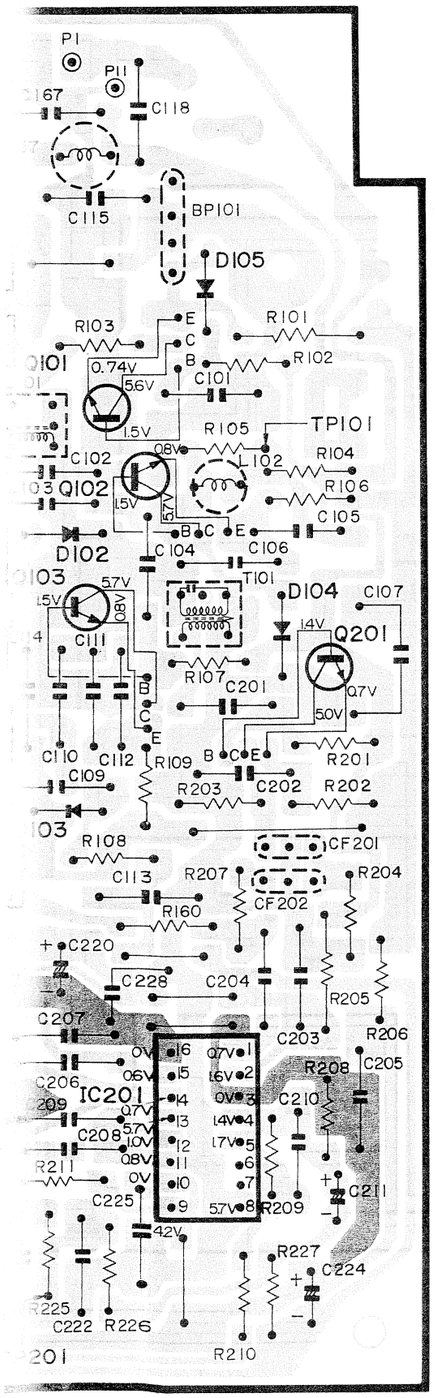

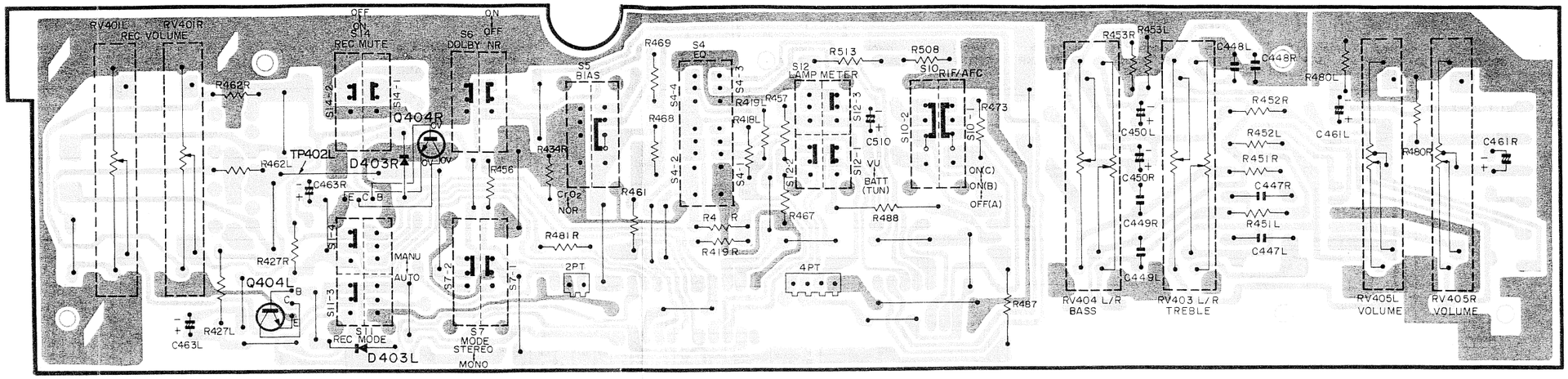

SWITCH/CONTROL

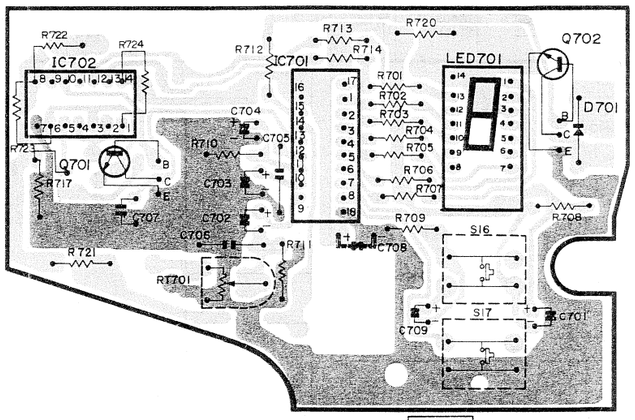

DRPS

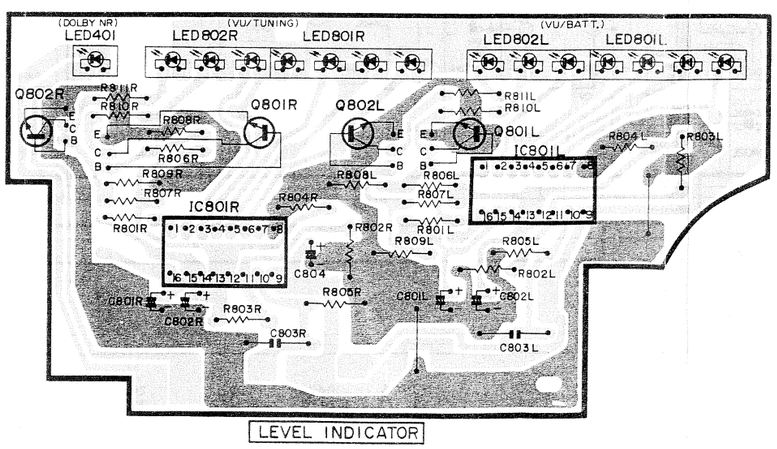

LEVEL INDICATOR

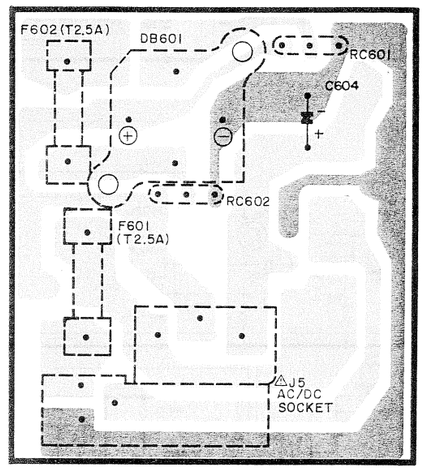

POWER

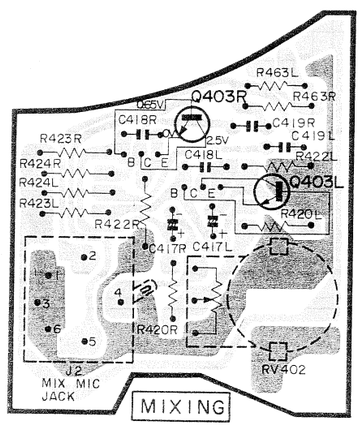

MIXING

www.manualscenter.com

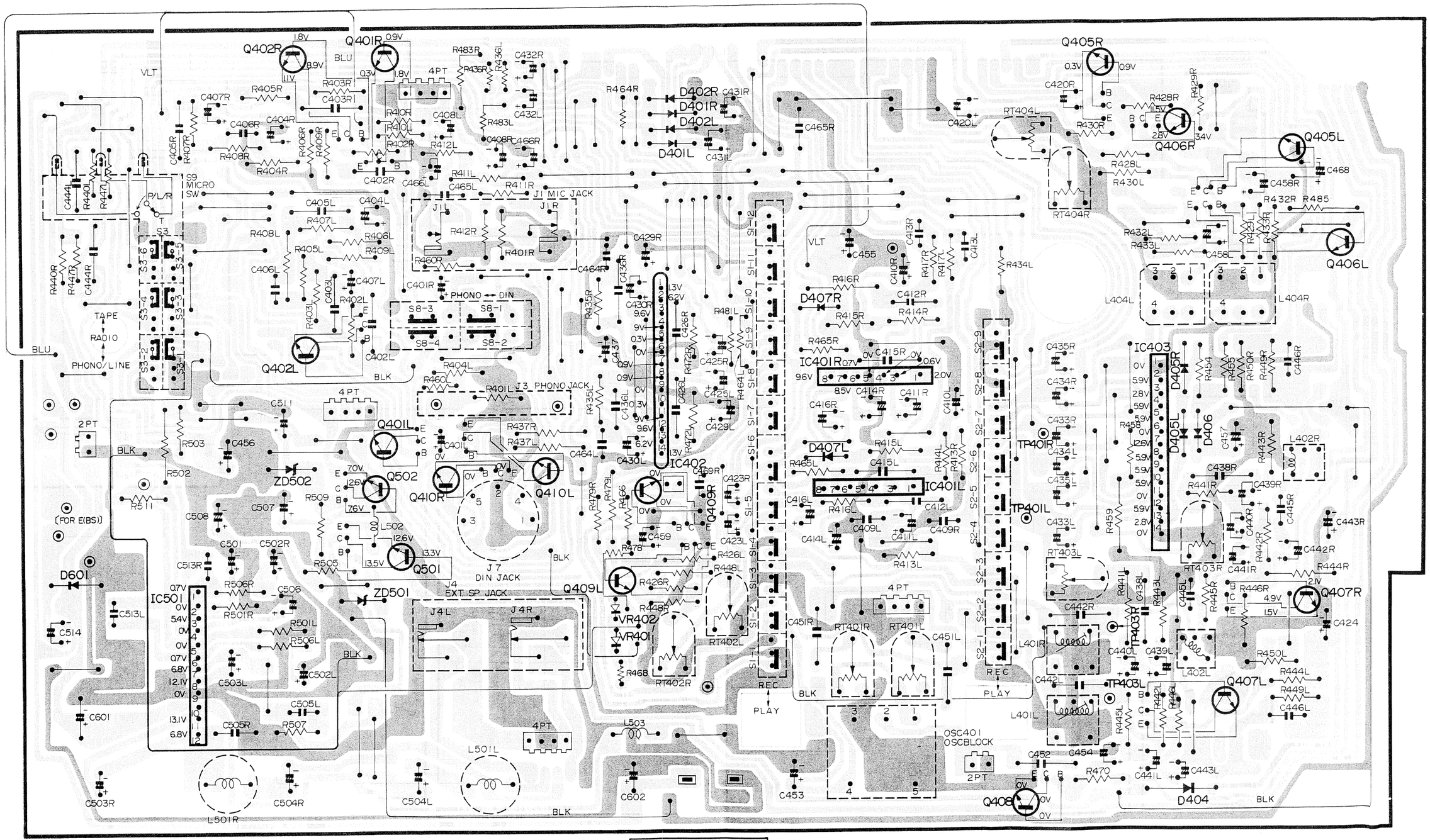

DECK/AF/POWER

www.manualscenter.com

WIRING DIAGRAM

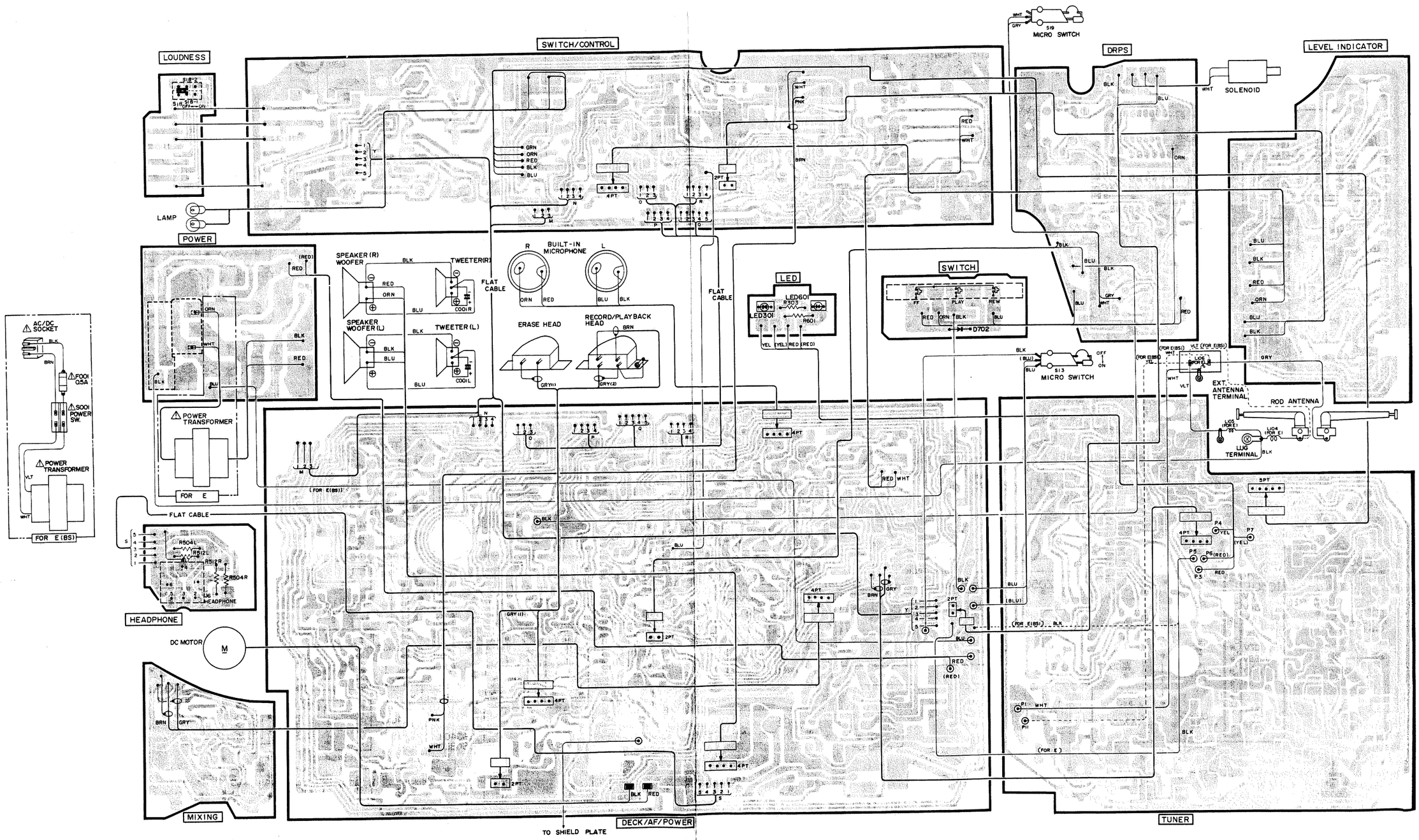

www.manualscenter.com

REPLACEMENT PARTS LIST

SYMBOL-NO	P-NO	DESCRIPTION
		CAPACITORS
CT101-102	5052391	PLASTIC FILM VARIABLE
CT151	5058191	TRIMMER 10PF
CT153-154	5058191	TRIMMER 10PF
CT156	5058102	VARIABLE
CV101-102	5052391	PLASTIC FILM VARIABLE
CV151-152	5052391	PLASTIC FILM VARIABLE
C101	0209010	CERAMIC DISC (RESISTOR SHAPE) 1000P F+-10
C102	0208133	CERAMIC DISC (RESISTOR SHAPE) 22PF+-5%
C103	0208125	CERAMIC (RESISTOR SHAPE) 4.7PF+-5%
C104	0208124	CERAMIC (RESISTOR SHAPE) 3.3PF+-5%
C105	0209004	CERAMIC DISC (RESISTOR SHAPE) 330PF +-10%
C106	0209026	CERAMIC DISC (RESISTOR SHAPE) 0.01M F+-30
C107	0209027	CERAMIC DISC (RESISTOR SHAPE) 0.015 MF+-3
C108	0246444	CERAMIC DISCAL 15PF+-5%
C109	0208157	CERAMIC (RESISTOR SHAPE) 6.8PF+-10% (NP-0
C110	0208161	CERAMIC (RESISTOR SHAPE) 15PF+-10% (NP-0)
C111	0208161	CERAMIC (RESISTOR SHAPE) 15PF+-10% (NP-0)
C112	0208161	CERAMIC (RESISTOR SHAPE) 15PF+-10% (NP-0)
C113	0209027	CERAMIC DISC (RESISTOR SHAPE) 0.015 MF+-3
C114	0209010	CERAMIC DISC (RESISTOR SHAPE) 1000P F+-10
C115	0209010	CERAMIC DISC (RESISTOR SHAPE) 1000P F+-10
C116	0208141	CERAMIC DISC (RESISTOR SHAPE) 100PF +-5%
C117	0209026	CERAMIC DISC (RESISTOR SHAPE) 0.01M F+-30
C118	0209010	CERAMIC DISC (RESISTOR SHAPE) 1000P F+-10
C152	0208125	CERAMIC (RESISTOR SHAPE) 4.7PF+-5%
C153	0208134	CERAMIC (RESISTOR SHAPE) 27PF+-5%
C154	0208129	CERAMIC (RESISTOR SHAPE) 10PF+-5%
C155	0208131	CERAMIC (RESISTOR SHAPE) 15PF+-5%
C156	0208141	CERAMIC DISC (RESISTOR SHAPE) 100PF +-5%
C160	0209010	CERAMIC DISC (RESISTOR SHAPE) 1000P F+-10
C161	0209026	CERAMIC DISC (RESISTOR SHAPE) 0.01M F+-30
C162	0209026	CERAMIC DISC (RESISTOR SHAPE) 0.01M F+-30
C163	0209027	CERAMIC DISC (RESISTOR SHAPE) 0.015 MF+-3
C164	0209027	CERAMIC DISC (RESISTOR SHAPE) 0.015 MF+-3
C167	0208125	CERAMIC (RESISTOR SHAPE) 4.7PF+-5%
C168	0209027	CERAMIC DISC (RESISTOR SHAPE) 0.015 MF+-3
C201	0209026	CERAMIC DISC (RESISTOR SHAPE) 0.01M F+-30
C202	0209026	CERAMIC DISC (RESISTOR SHAPE) 0.01M F+-30
C203	0209027	CERAMIC DISC (RESISTOR SHAPE) 0.015 MF+-3
C204	0209026	CERAMIC DISC (RESISTOR SHAPE) 0.01M F+-30
C205	0208141	CERAMIC DISC (RESISTOR SHAPE) 100PF +-5%
C206	0209026	CERAMIC DISC (RESISTOR SHAPE) 0.01M F+-30
C207	0209026	CERAMIC DISC (RESISTOR SHAPE) 0.01M F+-30
C208	0208138	CERAMIC DISC (RESISTOR SHAPE) 680PF +-16%
C209	0209011	CERAMIC DISC (RESISTOR SHAPE) 150PF +-10%
C210	0208133	CERAMIC DISC (RESISTOR SHAPE) 22PF+-5%
C212	0209026	CERAMIC DISC (RESISTOR SHAPE) 0.01M F+-30
C214	0208138	CERAMIC DISC (RESISTOR SHAPE) 680PF +-16%
C216	0209027	CERAMIC DISC (RESISTOR SHAPE) 0.015 MF+-3
C218	0209027	CERAMIC DISC (RESISTOR SHAPE) 0.015 MF+-3
C219	0209027	CERAMIC DISC (RESISTOR SHAPE) 0.015 MF+-3
C221	0209011	CERAMIC DISC (RESISTOR SHAPE) 150PF +-10%
C222	0209004	CERAMIC DISC (RESISTOR SHAPE) 330PF +-10%
C225	0209027	CERAMIC DISC (RESISTOR SHAPE) 0.015 MF+-3
C226	0209005	CERAMIC DISC (RESISTOR SHAPE) 390PF +-10%
C227	0209005	CERAMIC DISC (RESISTOR SHAPE) 390PF +-10%
C308LR	0209025	CERAMIC DISC (RESISTOR SHAPE) 6800P F+-30
C402LR	0209010	CERAMIC DISC (RESISTOR SHAPE) 1000P F+-10
C403LR	0208138	CERAMIC DISC (RESISTOR SHAPE) 680PF +-16%
C405LR	0209026	CERAMIC DISC (RESISTOR SHAPE) 0.01M F+-30

www.manualscenter.com

SYMBOL-NO	P-NO	DESCRIPTION
		CAPACITORS
C412LR	0209010	CERAMIC DISC (RESISTOR SHAPE) 1000P F+-10
C415LR	0209001	CERAMIC (RESISTOR SHAPE) 180PF+-10%
C422LR	0208128	CERAMIC (RESISTOR SHAPE) 8.2PF+-5%
C426LR	0209010	CERAMIC DISC (RESISTOR SHAPE) 1000P F+-10
C427LR	0209003	CERAMIC DISC (RESISTOR SHAPE) 270PF +-10%
C428LR	0209021	CERAMICDISC(RESISTORSHAPE)1500PF+-10%
C436LR	0209010	CERAMIC DISC (RESISTOR SHAPE) 1000P F+-10
C438LR	0209022	CERAMIC DISC (RESISTOR SHAPE) 0.002 2MF+-
C442LR	0209003	CERAMIC DISC (RESISTOR SHAPE) 270PF +-10%
C444LR	0209026	CERAMIC DISC (RESISTOR SHAPE) 0.01M F+-30
C447LR	0209025	CERAMIC DISC (RESISTOR SHAPE) 6800P F+-30
C451LR	0209002	CERAMIC DISC (RESISTOR SHAPE) 220PF +-10%
C452	0209022	CERAMIC DISC (RESISTOR SHAPE) 0.002 2MF+-
C704	0256362	TANTALUM ELECTROLYTIC 0.22MF+-10% 35V
C705-706	0209010	CERAMIC DISC (RESISTOR SHAPE) 1000P F+-10
C803LR	0209010	CERAMIC DISC (RESISTOR SHAPE) 1000P F+-10
		RESISTORS
RC601-602	0186451	CR PACK
RT301	0151806	SEMI VARIABLE RESISTOR 1KOHM B
RT302	5007185	SEMI VARIABLE RESISTOR 4.7KOHM
RT401LR	0151818	SEMI VARIABLE RESISTOR 100KOHM
RT402LR	0151821	SEMI VARIABLE RESISTOR 50K OHM
RT403LR	0151817	SEMI VARIABLE RESISTOR 20KOHM B
RT404LR	0151808	SEMI VARIABLE RESISTOR 10K OHM RS88
RT701	0151808	SEMI VARIABLE RESISTOR 10K OHM RS88
RV401LR	5020092	VARIABLE RESISTOR 50KOHM(B)
RV402	5000408	VARIABLE 10KOHM(B)
RV403LR	5020082	VARIABLE RESISTOR 100KOHM(B)
RV404LR	5020081	VARIABLE RESISTOR 100KOHM(C)
RV405LR	5020093	VARIABLE RESISTOR 10KOHM(A)

SYMBOL-NO	P-NO	DESCRIPTION
		SEMI-CONDUCTORS
DB601	5331102	DIODE M4B-31-22
D102	5330573	DIODE SILICON 1S2473 300MHZ 300MW
D103	5330661	DIODE SILICON LS2790 200MHZ 80MW
D104-105	5330573	DIODE SILICON 1S2473 300MHZ 300MW
D151	5331052	DIODE 1K60RLF-2
D201-202	5331052	DIODE 1K60RLF-2
D203-206	5331052	DIODE 1K60RLF-2
D401LR	5330573	DIODE SILICON 1S2473 300MHZ 300MW
D402LR	5330573	DIODE SILICON 1S2473 300MHZ 300MW
D405LR	5330573	DIODE SILICON 1S2473 300MHZ 300MW
D406	5330573	DIODE SILICON 1S2473 300MHZ 300MW
D407LR	5330573	DIODE SILICON 1S2473 300MHZ 300MW
D601	5330001	DIODE SILICON V03C 60H
D701	5331052	DIODE 1K60RLF-2
IC201	5351064	IC AN253BB
IC301	5350684	IC HA1330
IC401LR	5350961	IC BA340
IC402	5357001	IC TA1024
IC403	5356832	MODULE TA3003
IC501	5352141	IC HA1392
IC701	5352381	IC HA12024
IC702	5359501	IC MPD4011C
IC801LR	5352401	IC IR2E01
LED301	5380271	LED GL-9PR2
LED401	5380592	LED LN417GP
LED601	5380271	LED GL-9PR2
LED701	5380521	LED LA4010A
LED801LR	5380461	LED LN04202P
LED802LR	5380463	LED LN03202P
Q101	5321271	TRANSISTOR SILICON 2SC1674L 600MHZ
Q102-103	5321281	TRANSISTOR SILICON 2SC1675-L 230MHZ 200M
Q151	5321281	TRANSISTOR SILICON 2SC1675-L 230MHZ 200M
Q152	5321281	TRANSISTOR SILICON 2SC1675-L 230MHZ 200M
Q201	5321281	TRANSISTOR SILICON 2SC1675-L 230MHZ 200M
Q401LR	5321293	TRANSISTOR 2SC1740LN-R
Q402LR	5321293	TRANSISTOR 2SC1740LN-R
Q403LR	5321293	TRANSISTOR 2SC1740LN-R
Q404LR	5321293	TRANSISTOR 2SC1740LN-R

www.manualscenter.com

SYMBOL-NO	P-NO	DESCRIPTION
		SEMI-CONDUCTORS
Q405LR	5321293	TRANSISTOR 2SC1740LN-R
Q406LR	5321293	TRANSISTOR 2SC1740LN-R
Q407LR	5321293	TRANSISTOR 2SC1740LN-R
Q408	5321293	TRANSISTOR 2SC1740LN-R
Q409LR	5321293	TRANSISTOR 2SC1740LN-R
Q501-502	5320643	TRANSISTOR SILICON 2SC1162 150M
Q701	5320813	TRANSISTOR 2SC945P
Q702	5322213	TRANSISTOR 2SC1741R
Q801LR	5320813	TRANSISTOR 2SC945P
Q802LR	5320813	TRANSISTOR 2SC945P
ZD501	5330533	DIODE SILICON HZ-12C 1.0M
ZD502	5330313	DIODE SILICON HZ7C 1.0M
		TRANSFORMERS
⚠ PT	5212682	POWER TRANSFORMER (For E)
⚠ PT	5212683	POWER TRANSFORMER (For E(BS))
T101	5140071	FM IF
T151	5160101	AM IF
T201	5148111	FM DISCRIMINATOR
T202	5148112	FM DISCRIMINATOR
T203	5140072	FM IFT
T204	5130122	AM IFT
		COILS
L101	5126482	FM RF
L102	5150791	CHOKE COIL
L103	5126278	FM OSILLATOR COIL
L104-106	5123271	FM TRAP COILL0.5MH (For E)
L151	5123493	SWITCH ANTENNA
L152-153	5113501	FERRITE CORE ANTENNA
L154	5123494	Sw OSC
L155	5120319	OSCILLATOR COIL
L156	5120465	LW OSC
L157	5123271	FM TRAP COILL0.5MH
L401LR	5260215	TRAP COIL 33HH
L402LR	5120274	CHOKE COIL
L403LR	5260215	TRAP COIL 33HH
L404LR	5161661	DOLBY FILTER
L501LR	5150761	CHOKE COIL
L502	5152123	CHOKE 18MICRO H

SYMBOL-NO	P-NO	DESCRIPTION
		MISCELLANEOUS
⚠	5653242	POWER SOCKET
	5653321	IC SOCKET
	5659121	BACK COVER
	5671661	FM ANTENNA TERMINAL
ANT	5752511	ROD ANTENNA
BP101	5161551	FILTER
CF201-202	5160211	CERAMIC FILTER CF107A
⚠ F001	5720173	FUSE 500MA (For E(BS))
F301LR	5161731	LCR FILTER
F601-602	5721064	FUSE 2.5A
J1	5679442	MIC JACK
J2	5674132	MIC. MIXING JACK
J3	5676241	JACK (PHONO)
J4	5679442	EXT. SP. JACK
J6	5674132	HEADPHONE JACK
J7	5653211	DIN JACK
MIC	5421571	BUILT IN MICROPHONE
OSC401	5260662	OSCILLATOR BLOCK
PL001-002	5762281	LAMP
S 1	5623611	SLIDE SWITCH (REC/P.B.)
S 2	5623431	SLIDE SWITCH (REC/P.B.)
S 3	5624221	SLIDE SWITCH (FUNCTION)
S 4	5604282	LEVER SWITCH (TAPE SELECTOR-EQ)
S 5	5604441	LEVER SWITCH (TAPE SELECTOR-BIAS)
S 6	5604082	LEVER SWITCH (DOLBY NR)
S 7	5604082	LEVER SWITCH (MODE)
S 8	5623871	SLIDE SWITCH (PHONO/LINE)
S 9	5632412	LEAF SWITCH (MICRO SWITCH)
S 10	5604092	LEVER SWITCH (RIF/AFC)
S 11	5604104	LEVER SWITCH (AUTO/MANUAL)
S 12	5604104	LEVER SWITCH (LEVEL/TUNE/BATTERY)
S 14	5604083	LEAF SWITCH (REC. MUTE)
S 15	5625011	SLIDE SWITCH (BAND SELECTOR)
S 16	5633352	PUSH SWITCH (PROGRAM)
S 17	5633352	PUSH SWITCH (RESET)
S 18	5633313	PUSH SWITCH (LOUDNESS)
SP	5401122	SPEAKER-5CM
SP	5407401	SPEAKER-16CM
⚠ S001	5602021	POWER SWITCH (For E(BS))

www.manualscenter.com

SYMBOL-NO	P-NO	DESCRIPTION
		MISCELLANEOUS
S701-703	5603411	LEVER SWITCH (PLAY/F.F./REW)
		FOR ACCESSORIES
⚠	5747321	POWER CORD (For E)
⚠	5746341	POWER CORD (For E(BS))
	5896391	FM ANTENNA (For E(BS))
		FOR CASSETTE DECK ASSEMBLY (A)
1	7325671	PLAY ARM
2	7327741	PLAY ROLLER ARM ASSEMBLY
3	6344301	PLAY ROLLER
4	7786211	POLYESTER WASHER
5	7041513	HEAD PLATE ASSEMBLY
7	6302011	SPRING
8	5444931	RECORD PLAYBACK HEAD
9	5445131	ERASE HEAD
10	7790251	HEAD SPRING
11	7781002	HEAD FIXING SCREW-2MMDX6MM
12	7548741	BALL-4MMD
13	7548742	BALL-2MMD
14	6533741	HEAD PLATE HOLDER
15	7325613	PAUSE LEVER ASSEMBLY
16	7575951	COLLAR
17	6533862	PAUSE LOCK PIECE
18	6546041	SPRING
19	7326961	PICK UP LEVER
20	6546191	PICK UP SPRING
21	7786626	WASHER
22	7327731	F.F ARM ASSEMBLY
23	7326883	F.F LEVER
24	7548732	F.F LEVER SHAFT
25	6344311	F.F ROLLER
26	7327513	EJECT LEVER
27	7326942	EJECT ARM
28	7325681	PRESSURE ROLLER ARM ASSEMBLY
29	6546051	SPRING
30	7325651	AUTO STOP LEVER ASSEMBLY
31	6414002	TAKE UP REEL BASE ASSEMBLY
32	6414012	SUPPLY REEL BASE ASSEMBLY
33	7786217	POLYSLIDER WASHER
34	6305751	SPRING (FOR TAKE UP)
34-1	6320874	SPRING (FOR SUPPLY)
35	7786119	POLYESTER WASHER
36	7786115	POLYESTER WASHER
37	6422141	CLUTCH ASSEMBLY
38	6422131	AUTO STOP PICK UP BLOCK ASSEMBLY
39	7566711	CLUTCH ARM SHAFT
40	7325713	STOP LEVER
41	7325703	PLAY LEVER
42	7326873	REWIND LEVER
43	7325693	RECORDING LEVER
44	7326823	PAUSE ARM
45	7790261	CAPSTAN SCREW
46	6533732	CASSETTE HOLDER SPRING
47	5576723	MOTOR ASSEMBLY
48	6585051	RUBBER CUSHION
49	7790281	SPACER
50	5559247	COUNTER
51	7326891	BRAKE PLATE
52	6579231	RUBBER WASHER
53	7325592	SOLENOID ASSEMBLY
54	6759441	RECORD PREVENTION LEVER
55	6422121	AUTO STOP PULLEY
56	6759451	AUTO STOP CAM
57	6533871	SPRING
58	7778856	POLYESTER WASHER
59	7326951	TIMER STANDBY LEVER
60	6546181	LOCK SPRING
61	7326811	TRANSFER PLATE
62	7786219	POLYESTER WASHER
63	7786117	POLYSLIDER WASHER
64	6373651	FLYWHEEL ASSEMBLY
65	7778856	POLYESTER WASHER
66	7786623	POLYSLIDER WASHER
67	6541151	SPRING
68	6541161	SPRING
69	6541131	SPRING
70	6541101	SPRING
71	6533721	LEAF SPRING
72	6541111	SPRING

www.manualscenter.com

EXPLODED VIEW (Cassette Chassis)

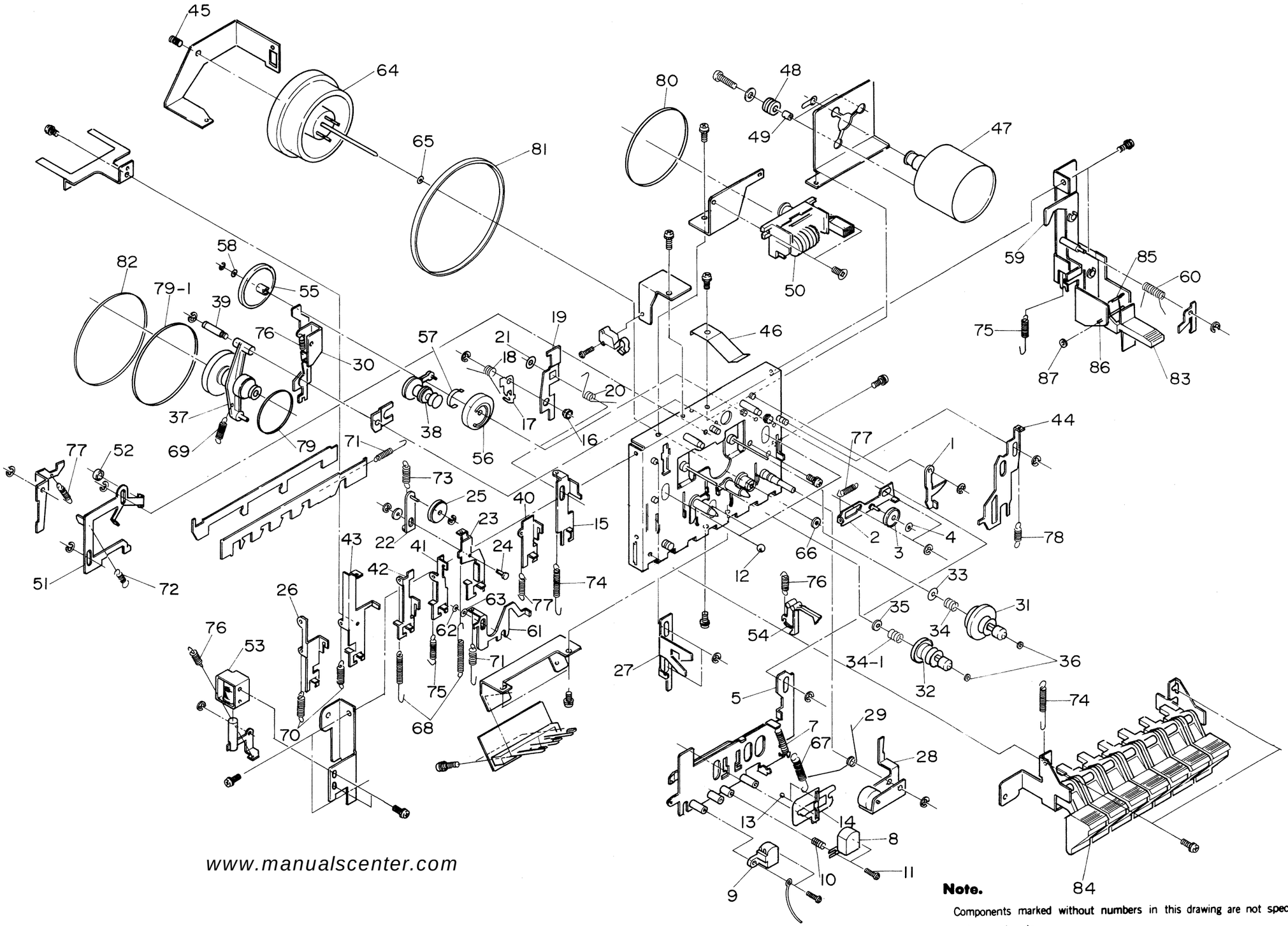

www.manualscenter.com

Note.

Components marked without numbers in this drawing are not specified as replacement parts.

EXPLODED VIEW (Cabinet)

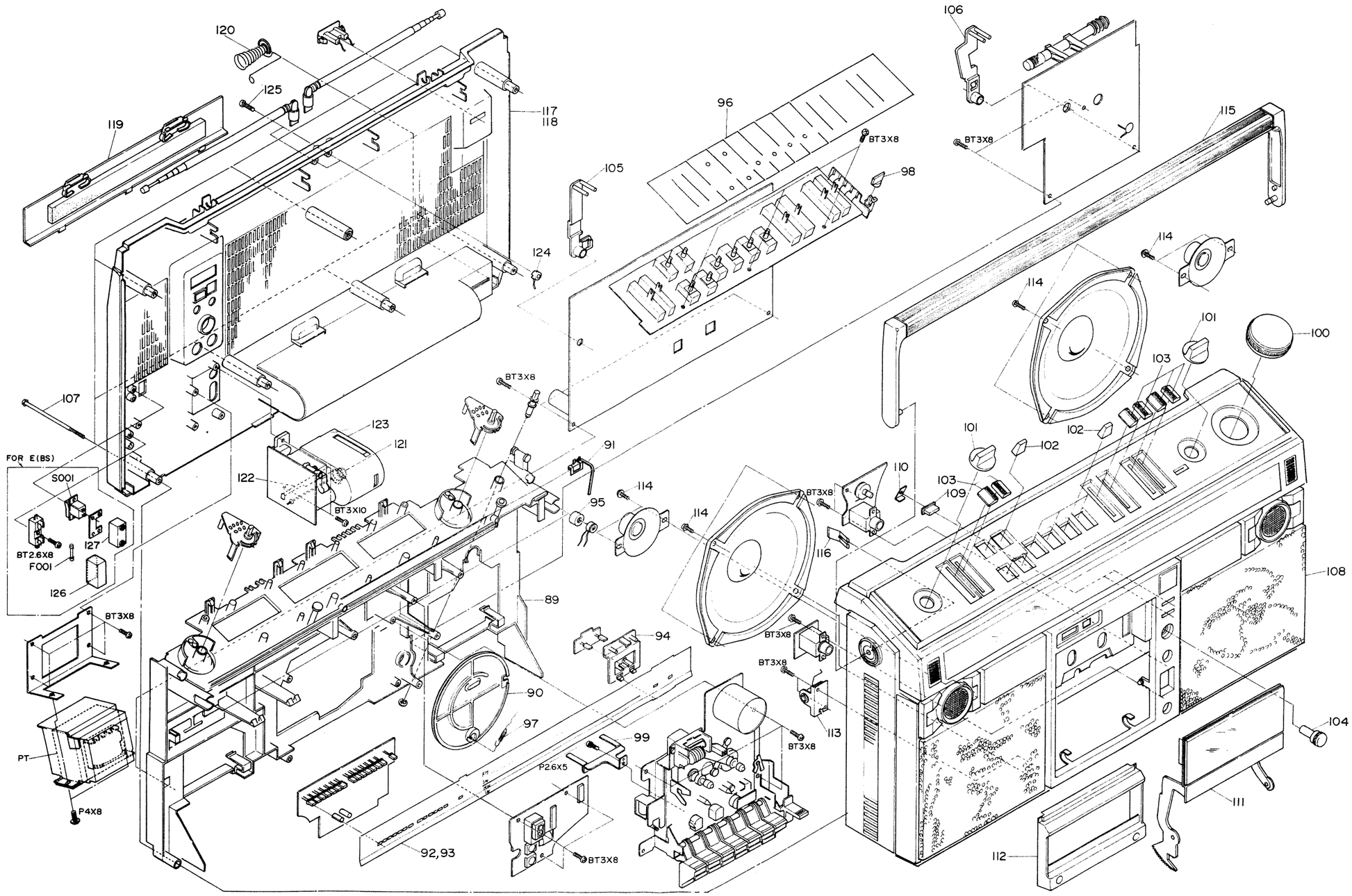

www.manualscenter.com

Note.

Components marked without numbers in this drawing are not specified as replacement parts.

SYMBOL-NO	P-NO	DESCRIPTION
		FOR CASSETTE DECK ASSEMBLY (A)
73	6541291	SPRING
74	7790252	SPRING
75	7790253	SPRING
76	7790254	SPRING
77	7790255	SPRING
78	6318882	SPRING
79	6355111	BELT
79-1	6355131	BELT
80	6355121	COUNTER BELT
81	6357131	FLYWHEEL BELT
82	6355181	BELT
83	6257821	BUTTON (TIMER STANDBY)
84	6257861	FUNCTION BUTTON ASSEMBLY
85	6533881	BUTTON HOLDER SPRING
86	7243353	PIN
87	7786624	POLYSLIDER WASHER
		FOR CHASSIS ASSEMBLY
89	6759121	CHASSIS ASSEMBLY
90	6345672	PULLEY-160MME
91	6394462	POINTER
92	6467794	SCALE PLATE (For E)
93	6467793	SCALE PLATE (For E(BS))
94	6759021	LED HOLDER
95	6570291	MIC COVER
96	7766323	SPACER
97	6316231	SPRING M
98	6053211	PUSH BUTTON (LOUDNESS)
99	7322583	RECORD SPRING ASSEMBLY

SYMBOL-NO	P-NO	DESCRIPTION
		MISCELLANEOUS
100	6283381	TUNING KNOB
101	6283391	KNOB ASSEMBLY (FUNCTION,BAND)
102	6296851	LEVER KNOB
103	6295553	SLIDE KNOB
104	6283451	KNOB-14MMD (MIC VOLUME)
105	6759001	FUNCTION LEVER
106	6759011	BAND SLECT LEVER
107	77H1148	BT SCREW-3MMDX50MM
108	6034411	FRONT CASE ASSEMBLY
109	6053013	PUSH BUTTON
110	6533491	BUTTON SPRING
111	6092693	CASSETTE LID ASSEMBLY
112	6182202	HEAD COVER ASSEMBLY
113	7324884	DAMPER ASSEMBLY
114	7781133	BT SCREW-3MMD
115	6333648	HANDLE ASSEMBLY
116	6531143	SPRING
117	6034431	REAR CASE ASSEMBLY (For E)
118	6034435	REAR CASE ASSEMBLY (For E(BS))
119	6173454	BATTERY LID ASSEMBLY
120	6305691	BATTERY TERMINAL (+,-)
121	6305702	BATTERY SPRING (-)
122	7451491	BATTERY TERMINAL
123	6758591	TERMINAL HOLDER
124	5687142	CAP TERMINAL
125	8744414	BIND SCREW-3MMDX14MM
126	6746881	FUSE COVER (For E(BS))
127	6746902	SWITCH COVER (For E(BS))

www.manualscenter.com

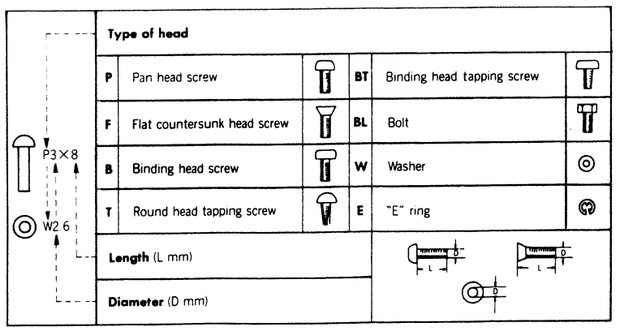

When ordering hardware excluding stated on these lists, be sure to make your orders **with type and size.**

MEMO
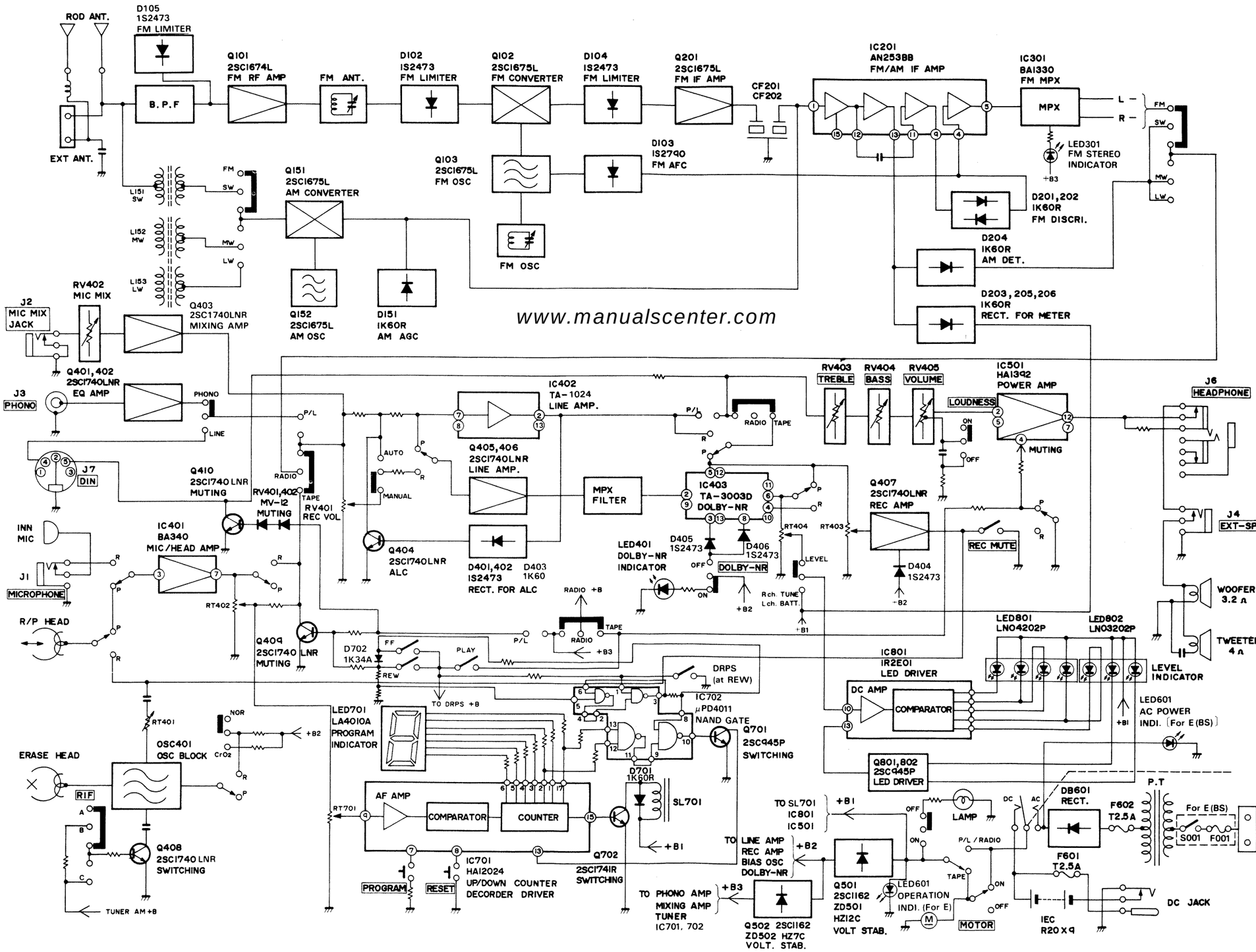
BLOCK DIAGRAM