PIONEER

Service Manual

CIRCUIT DESCRIPTIONS
REPAIR & ADJUSTMENTS

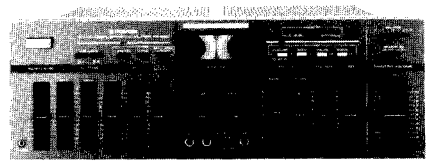

ORDER NO.
ARP-484-0

STEREO AMPLIFIER

SA-055

MODEL SA-055 COMES IN SEVEN VERSIONS DISTINGUISHED AS FOLLOWS:

Type	Voltage	Remarks
KU	AC120V only	U.S.A. model
HE	AC220V, 240V (switchable)	European continent model
HB	AC220V, 240V (switchable)	United Kingdom model
S	AC110V, 120V, 220V, 240V (switchable)	General export model
S/G	AC110V, 120V, 220V, 240V (switchable)	U.S. Military model
YP	AC240V only	Australia model
HEZ	AC220V, 240V (switchable)	West Germany model

- **This service manual is applicable to the KU, HE, HB, YP, S, S/G types.**
- **As to the HE, HB, YP, S and S/G types, please refer to pages 36~38.**
- **As to the HEZ type, please refer to the additional service manual.**
- **Ce manuel d'instruction se refère au mode de réglage, en français.**
- **Este manual de servicio trata del método de ajuste escrito en español.**

CONTENTS

1. SAFETY INFORMATION 2
2. FRONT PANEL FACILITIES 3
3. SPECIFICATIONS 5
4. DISASSEMBLY 6
5. PARTS LOCATION 7
6. BLOCK DIAGRAM 9
7. CIRCUIT DESCRIPTIONS 11
8. PACKING 17
9. EXPLODED VIEW AND PARTS LIST 18
10. P.C. BOARDS CONNECTION DIAGRAM 21
11. SCHEMATIC DIAGRAM 26
12. ELECTRICAL PARTS LIST 29
13. ADJUSTMENTS 33
    RÉGLAGE 34
    AJUSTE 35
14. FOR HE, HB AND YP TYPES 36
15. FOR S AND S/G TYPES 38

PIONEER ELECTRONIC CORPORATION 4-1, Meguro 1-Chome, Meguro-ku, Tokyo 153, Japan
PIONEER ELECTRONICS (USA) INC. P.O. Box 1760, Long Beach, California 90801 U.S.A.
TEL: (800) 421-1404, (800) 237-0424
PIONEER ELECTRONIC (EUROPE) N.V. Keetberglaan 1, 2740 Beveren, Belgium TEL: 03/775-28-08
PIONEER ELECTRONICS AUSTRALIA PTY. LTD. 178-184 Boundary Road, Braeside, Victor a 3195, Australia
TEL: (03) 580-9911

YX © JULY 1984 Printed in Japan

www.manualscenter.com

1. SAFETY INFORMATION

1. SAFETY PRECAUTIONS

The following check should be performed for the continued protection of the customer and service technician.

LEAKAGE CURRENT CHECK

Measure leakage current to a known earth ground (water pipe, conduit, etc.) by connecting a leakage current tester such as Simpson Model 229-2 or equivalent between the earth ground and all exposed metal parts of the appliance (input/output terminals, screwheads, metal overlays, control shaft, etc.). Plug the AC line cord of the appliance directly into a 120V AC 60Hz outlet and turn the AC power switch on. Any current measured must not exceed 0.5mA.

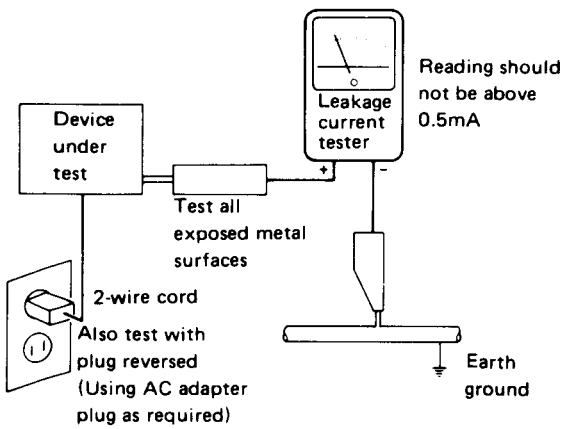

AC Leakage Test

ANY MEASUREMENTS NOT WITHIN THE LIMITS OUTLINED ABOVE ARE INDICATIVE OF A POTENTIAL SHOCK HAZARD AND MUST BE CORRECTED BEFORE RETURNING THE APPLIANCE TO THE CUSTOMER.

2. PRODUCT SAFETY NOTICE

Many electrical and mechanical parts in the appliance have special safety related characteristics. These are often not evident from visual inspection nor the protection afforded by them necessarily can be obtained by using replacement components rated for voltage, wattage, etc. Replacement parts which have these special safety characteristics are identified in this Service Manual.

Electrical components having such features are identified by marking with a ⚠ on the schematics and on the parts list in this Service Manual.

The use of a substitute replacement component which dose not have the same safety characteristics as the PIONEER recommended replacement one, shown in the parts list in this Service Manual, may create shock, fire, or other hazards.

Product Safety is continuously under review and new instructions are issued from time to time. For the latest information, always consult the current PIONEER Service Manual. A subscription to, or additional copies of, PIONEER Service Manual may be obtained at a nominal charge from PIONEER.

QUESTIONNAIRE

MODEL _____

One Model per questionnaire

Dear Servicer,

Thank you for your cooperation in the post-sale service of Pioneer products.

This questionnaire is used as a tool to improve the serviceability of our products and service manuals. Please evaluate this model and service manual by answering the following questions. Your ideas may be realized in our future products. Your answers will be appreciated. Thank you.

PIONEER ELECTRONIC CORP.

T. Nakagawa, Manager, Service Section, International Division

1. SERVICING EVALUATION	Circle applicable number:	Good		Fair		Poor
a. Disassembly/Re-assembly:		1	2	3	*4	*5
b. Circuit Checks:		1	2	3	*4	*5
c. Replacement of Parts:		1	2	3	*4	*5
d. Adjustment (s):		1	2	3	*4	*5

* If (4) or (5) was circled, please be specific.

www.manualscenter.com

e. Your advice, opinion or ideas related to servicing this product.

2. SERVICE MANUAL EVALUATION

a. Circuit & Mechanism Description

b. Circuit Diagram

3. OTHER

Please describe other areas of servicing which you may find difficult.

Completed by : Date :

Company Name :

Address :

City/State/Zip :

Please send this form filled to the distributor in your country.

2. FRONT PANEL FACILITIES

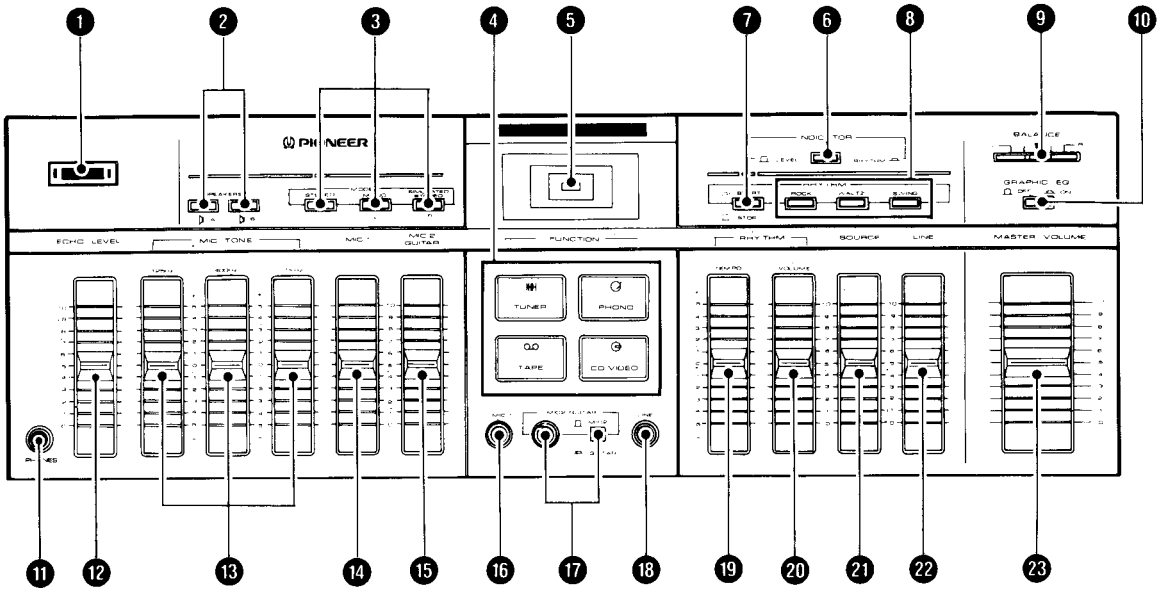

❶ POWER SWITCH (POWER)

This switch turns the component ON and OFF.
Press position (ON): Power is supplied to the component.
Released position (OFF): Power is turned off.

❷ SPEAKERS SELECTOR SWITCHES (SPEAKERS)

Selects the speaker system which is playing.
When these switches are pressed, sound is heard from the corresponding speakers selected.

"A" — Sound is heard from the speaker system connected to SPEAKERS A terminals.
"B" — Sound is heard from the speaker system connected to SPEAKERS B terminals.

NOTE:
When only one set of speakers are connected (to the SPEAKERS A terminals), no sound will be produced if both switches "A" and "B" are depressed together.

❸ MODE SELECTOR SWITCHES (MODE)

These switches are used to select the playback and recording mode.

"STEREO" — Press for ordinary stereo playback (indicator lights).
The L channel (or signal connected to the L terminals on the rear panel) is heard from the left speaker system, and the R channel (or signal connected to the R terminals on the rear panel) is heard from the right speaker system.

"MONO" — The sound from the L channel and R channel is mixed, and heard from both left and right speaker systems. Apart from playing back monaural sources, this switch is useful for checking the phase of the speaker system and volume balance.

"SIMULATED STEREO" — Converts signals from the L channel only into sounds with concert-hall presence similar to that of stereo. The sound is then heard from both left and right speaker systems.
With this switch, a "live" effect is obtained even when playing back monaural sound. Use it when listening to the sound from a VIDEO cassette recorder with monaural specifications, or when listening to FM or AM broadcasts in monaural.

NOTE:
The sound from the right channel cannot be converted to simulated stereo.
When connecting components with monaural specifications, plug them into the L channel terminals.

❹ FUNCTION SWITCHES (FUNCTION)/INDICATOR

These switches are used to select the component played back.

"PHONO" — Press this switch to listen to records on a stereo turntable.
"TUNER" — Press this switch to listen to FM/AM broadcasts on a radio tuner.
"CD/VIDEO" — Press this switch to listen to the component connected to the CD/VIDEO terminals.
"TAPE" — Press this switch to listen to tapes on a tape deck.

❺ LEVEL/RHYTHM INDICATOR (LEVEL/RHYTHM INDICATOR)

The output level and rhythm pattern are displayed according to the position of the display selector switch.
*The dots in the indicator indicate the appropriate level for making recordings (when the 3 dots to the right and left are lighted, the recording level is optimum).

❻ DISPLAY SELECTOR SWITCH (INDICATOR)

"LEVEL" — When released, the level/rhythm indicator functions as an output level indicator.

www.manualscenter.com

"RHYTHM" — When pressed in, the level/rhythm indicator functions as a rhythm indicator. (The display will not be produced when the PHYTHM switch is set to the "STOP" position.

❼ RHYTHM SWITCH (RHYTHM)/ INDICATOR

"START" — When pressed in, rhythm playback begins (the indicator lights). Press the rhythm switch and select the type of rhythm desired.

"STOP" — When released, rhythm playback stops (the indicator goes out).

❽ RHYTHM SELECTOR SWITCHES

"ROCK" — Plays back rock rhythm
"WALTZ" — Plays back waltz rhythm
"SWING" — Plays back swing rhythm

❾ BALANCE CONTROL (BALANCE)

This control should normally be set to the center position. If the stereo balance does not seem to be correct, use this control to adjust it. If the right channel is too much emphasized, turn the control to the left (L); if the left channel is too much emphasized, turn the control to the right (R).

❿ GRAPHIC EQUALIZER SWITCH (GRAPHIC EQ)

Used when a graphic equalizer (sold separately) is connected.

"OFF" — Release the switch when a graphic equalizer (sold separately) is not used.

"ON" — Press in when a graphic equalizer (sold separately) is used.
The tonal coloration of instruments connected to the LINE terminals or components connected to the rear panel (tuner, tape deck or turntable) can then be varied.

NOTE:
When not using a graphic equalizer (sold separately), be sure to set this switch to the "OFF" position (if it is set to the "ON" position, no sound will be heard).

⓫ HEADPHONES JACK (PHONES)

When using headphones, plug them into this jack.

NOTE:
This jack is intended for a mini plug (dia = 3.5 mm) If you have headphones with a standard plug (dia = 6.5 mm), use the accessory mini-standard 2-way plug adaptor.

⓬ ECHO LEVEL CONTROL (ECHO LEVEL)

This control is for adding echo effects to a microphone or electric guitar plugged into the MIC 1 or MIC 2/GUITAR terminals. At position "0", no effects are added; at position "10" the echo effect is maximum.

⓭ MIC TONE CONTROLS (MIC TONE)

These controls can be used to compensate the frequency response and thus control the tonal coloration of a microphone and/or electric guitar connected to the MIC1 and MIC2/GUITAR terminals. The controls operate at the frequencies 125 Hz, 400 Hz and 1 kHz, and have a compensation range at each frequency of +10 dB ∿ −10 dB.
For all controls, the center "0" position is the standard (flat) setting. If the control is moved upward, the level increases, if moved downward, the level decreases.

NOTE:
These controls cannot be used to adjust the sound of components connected to the rear panel, or instruments connected to the LINE terminals. In such cases, use a graphic equalizer (sold separately, e.g. Pioneer SG-05). When connected to the amplifier, you can enjoy adjusting or creating sound quality as above.

⓮ MIC 1 VOLUME CONTROL (MIC 1)

Adjusts the volume of a microphone plugged into the MIC 1 terminal. In position "0" no sound is heard, and in position "10" sound volume is maximum.

⓯ MIC 2/GUITAR VOLUME CONTROL (MIC 2/GUITAR)

Adjusts the volume of a microphone or electric guitar plugged into the MIC 2/GUITAR terminal. In position "0" no sound is heard, and in position "10" sound volume is maximum.

⓰ MIC 1 TERMINAL (MIC 1)

When using a microphone, plug it into this terminal.

⓱ MIC 2/GUITAR TERMINAL and SELECTOR SWITCH (MIC 2/GUITAR)

When using a microphone or electric guitar, plug it into this terminal. Be sure to set the selector switch to match the item being used.

"MIC 2" — Release to this position when a microphone is plugged in.

"GUITAR" — Press in to this position when an electric guitar is plugged in.

⓲ LINE TERMINAL (LINE)

When using keyboard, synthesizer or electric guitar (e.g. bass guitar), plug into this terminal.

⓳ RHYTHM TEMPO CONTROL (TEMPO)

Adjusts the tempo of the rhythm. The center "0" position is the standard setting. When the control is moved upward the tempo increases, when moved downward the tempo decreases.

⓴ RHYTHM VOLUME CONTROL (VOLUME)

Adjusts the volume of the rhythm. In position "0" no sound is heard, and in position "10" sound volume is maximum.

㉑ SOURCE VOLUME CONTROL (SOURCE)

Adjusts the volume of components connected to the rear panel (tuner, tape deck, turntable, compact disc player or video deck). In position "0" no sound is heard, and in position "10" sound volume is maximum.

3. SPECIFICATIONS

Amplifier Section

Continuous average power output is 70 watts* per channel, min., at 8ohms from 20Hertz to 20,000Hertz with no more than 0.09% total harmonic distortion.

DIN, Continuous Power Output at 1kHz (both channels driven)
- T.H.D. 0.09%, 8Ω . . . . . 75W per channel
- T.H.D. 1%, 1kHz . . . . . 80W per channel

Total Harmonic Distortion (20Hz to 20kHz, 8Ω, from CD/VIDEO)
- continuous rated power output . . . No more than 0.05%
- 35W per channel power output . . . No more than 0.07%

Damping Factor (20Hz to 20kHz, 8Ω) 50

Input (Sensitivity/Impedance) – at a volume of –6dB, max. value in parentheses
- PHONO . . . . . 2.5mV (1.25mV)/47kΩ
- TUNER . . . . . 150mV (75mV)/47kΩ
- CD/VIDEO . . . . . 150mV (75mV)/47kΩ
- TAPE PLAY . . . . . 150mV (75mV)/47kΩ
- MIC 1 . . . . . 1mV (0.5mV)/10kΩ
- MIC 2/GUITAR . . . . 1mV (0.5mV)/6mV (3mV)/10kΩ
- LINE . . . . . 150mV (75mV)/47kΩ

Phono Overload Level (T.H.D. 0.1%, 1kHz) 150mV

Output (Level/Impedance)
- TAPE REC 150mV/2.2kΩ

Frequency Response
- PHONO (RIAA Equalization) . . . 20Hz to 20kHz±0.5dB
- MIC . . . . . 150Hz to 15kHz $^{+0}_{-6}$ dB
- TUNER, CD/VIDEO, TAPE PLAY, LINE . . . . . 10Hz to 50kHz $^{+0}_{-3}$ dB

Hum and Noise (IHF, short circuited, A network) – at a volume of –6dB
- PHONO 70dB
- CD/VIDEO, TUNER, TAPE PLAY 76dB

Hum and Noise (DIN, continuous power 150mW)
- PHONO 66dB
- CD/VIDEO, TUNER, TAPE PLAY 67dB

MIC TONE Range
- 125Hz, 400Hz, 1kHz . . . . . ±10dB

Miscellaneous

Power Requirements
- HE, HB models . . . . . a.c. 220V~, 50/60Hz
- YP model . . . . . a.c. 240V~, 50/60Hz
- S, S/G models . . . . . ~AC 110V/120V/220V/240V (switchable), 50/60Hz
- KU, KC models . . . . . AC 120V, 60Hz

Power Consumption
- HE, HB models 380W
- YP model 380W
- S, S/G models 150W
- KU, KC models 180W

Dimensions . . . . . 420(W) x 150(H) x 279(D) mm
16-9/16(W) x 5-5/8(H) x 10-5/8(D) in

Weight (without package) . . . . . 7.8kg (17 lb 3 oz)

Furnished Parts

- Cord Holder 1
- Mini-Standard 2-way Plug Adaptor 1
- Operating Instructions 1

NOTES:
- *Specifications and the design subject to possible modification without notice due to improvements.*
- **Measured pursuant to the Federal Trade Commission's Trade Regulation rule on Power Output Claims for Amplifier.*

www.manualscenter.com

4. DISASSEMBLY

- **AF Ass'y Disassembly**

1. Remove the bonnet. (Removal of the front panel is not necessary.)
2. Undo the screws ❶ , and pull the heat sink upwards to be removed.
3. Undo the screws ❷ , and ❸ , pull the AF ass'y forward, and lift the front edge of the ass'y.

- **Volume and Complex Ass'y Disassembly**

1. Remove the bonnet and front panel ass'y.
2. Undo the screws ❶ .
3. Slide up the front stay slightly and pull forward. Front stay can be removed together with P.C. boards.
4. Remove the nylon rivet on the rear side of the front stay to remove the P.C. boards (volume and complex ass'y).

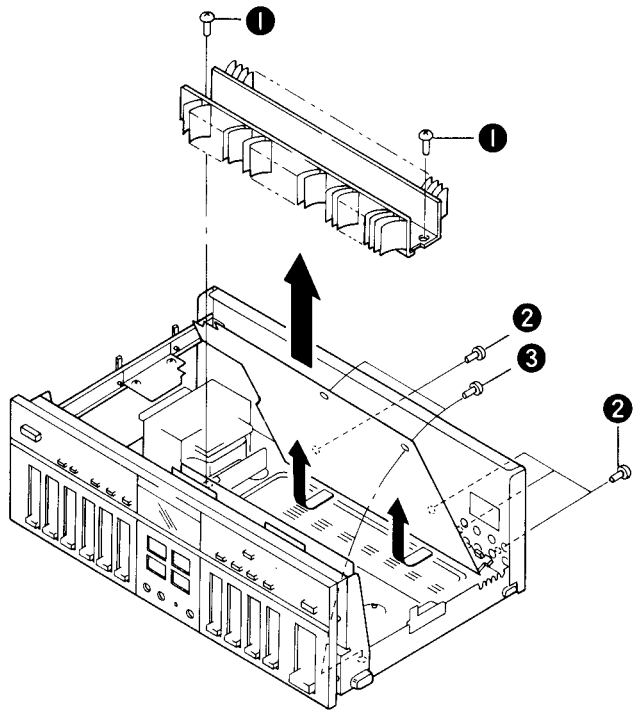

AF ass'y Disassembly

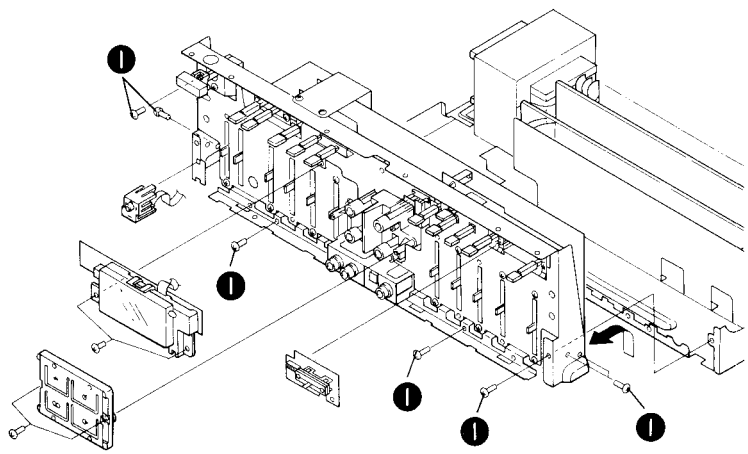

Volume and complex ass'y disassembly

5. PARTS LOCATION

- *Parts without part number cannot be supplied.*
- *The ⚠ mark found on some component parts indicates the importance of the safety factor of the part. Therefore, when replacing, be sure to use parts of identical designation.*
- *For your Parts Stock Control, the fast moving items are indicated with the marks ★★ and ★.*
  ★★ GENERALLY MOVES FASTER THAN ★.
  This classification shall be adjusted by each distributor because it depends on model number, temperature, humidity, etc.

Front Panel View

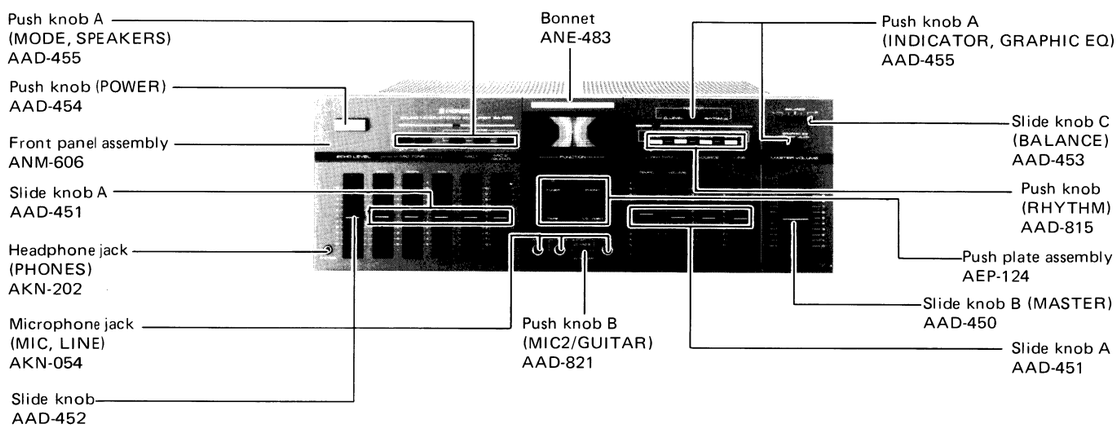

Rear Panel View

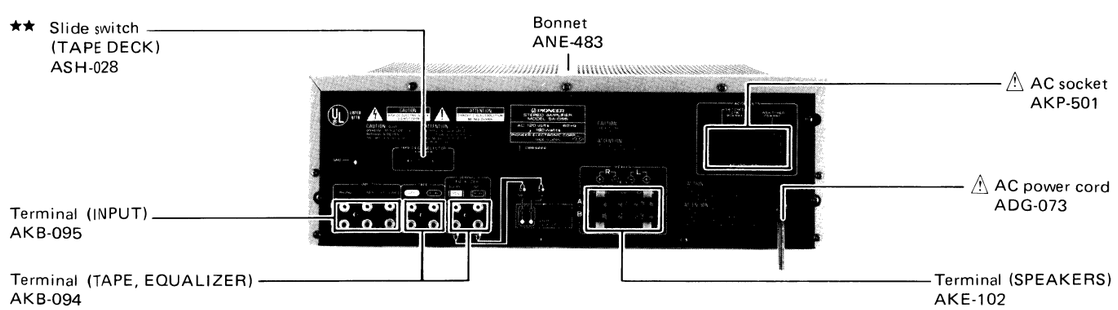

Front View with Front Panel Removed

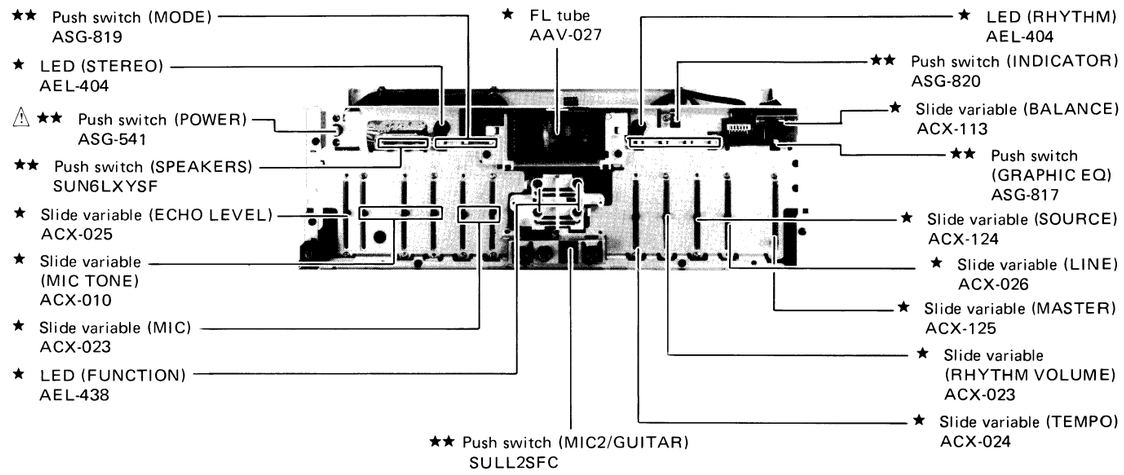

Top View

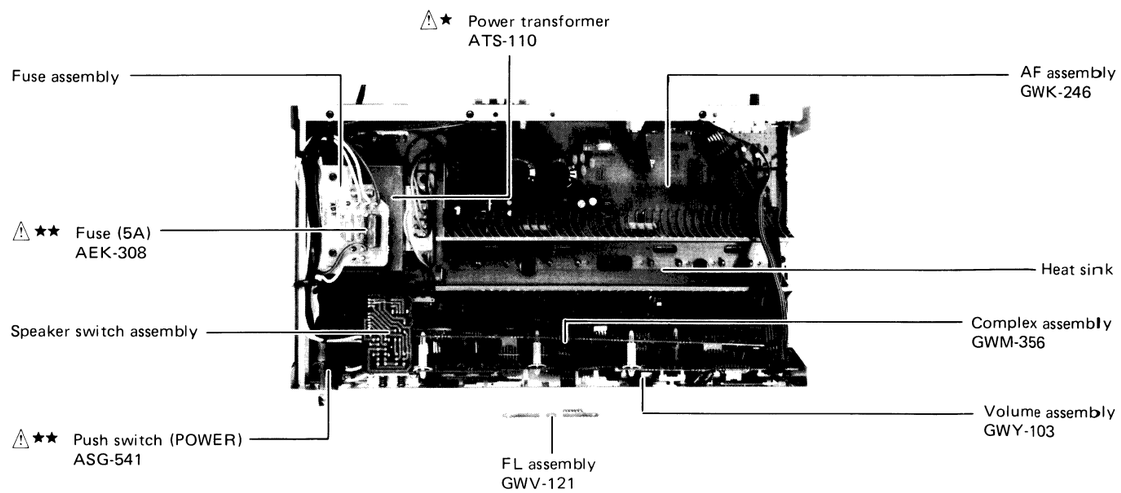

www.manualscenter.com

6. BLOCK DIAGRAM

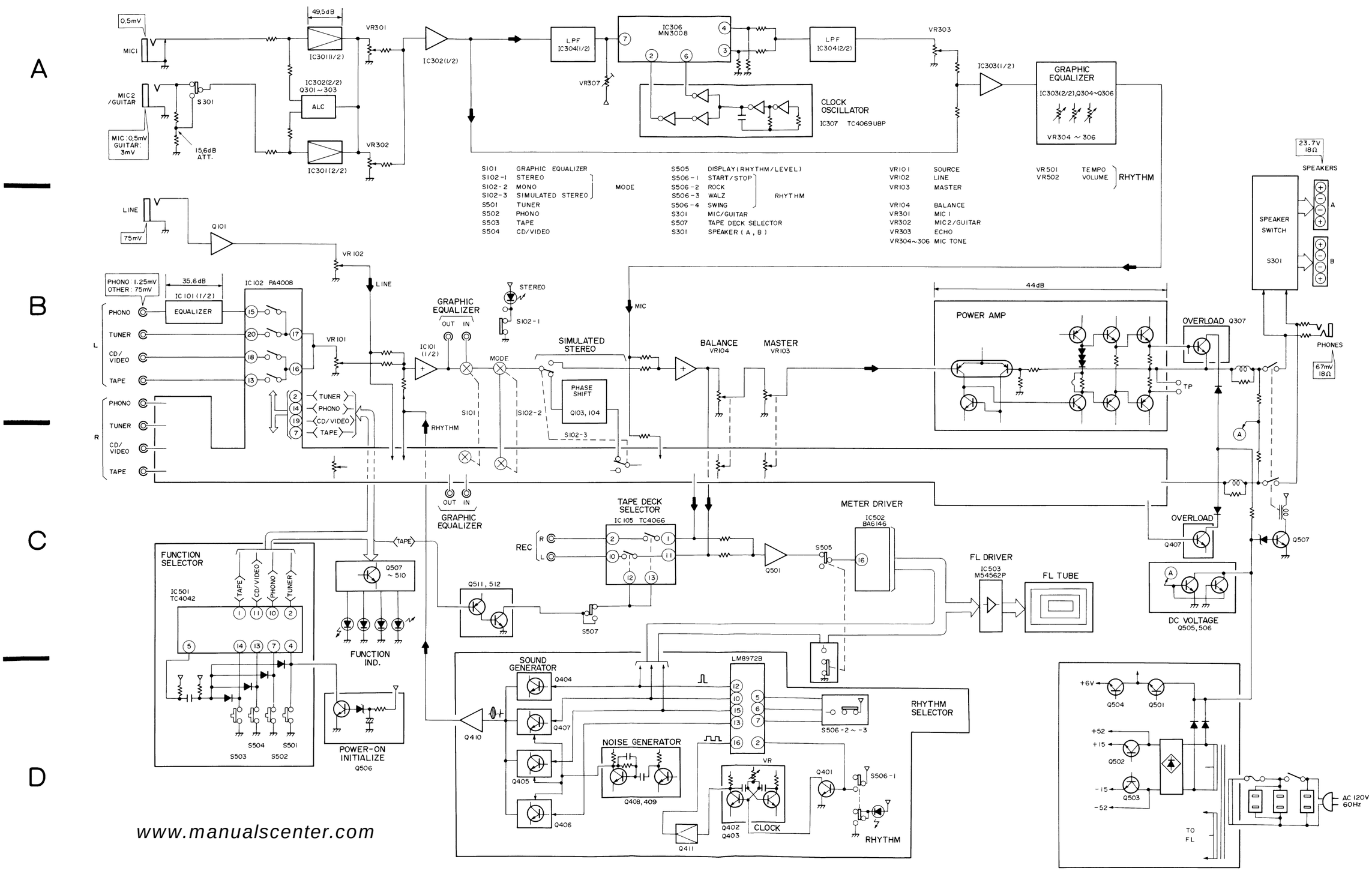

www.manualscenter.com

7. CIRCUIT DESCRIPTIONS

In addition to the regular source and tape inputs, the SA-055 also features line and mic/guitar inputs with independent level adjustment for each input. Other leading features include;

- Rhythm box generation of three separate rhythms (rock, waltz, and swing).
- Simulated stereo where stereo effect is obtained from a monaural source.
- Echo and three-element equalizer (mic/guitar only).
- FL display used as level meter and for rhythm pattern display purposes.

7.1 SIGNAL ROUTES (See Block Diagram)

- **Source Signal Route**

  Source signals selected by the function switching IC (PA4008), are passed to the mixing amplifier via the source level control (VR101) and are mixed in that amplifier with the line signal passed via the line level control (VR102). The rhythm box sound is also added at this stage. If an external adaptor (such as a graphic equalizer) is selected by the GRAPHIC EQUALIZER switch, the output is passed to that adaptor for mixing of the mic/guitar signal. The mixed output is then passed via the mode selector with simulated stereo circuit, the balance control, and the master volume control before being passed to the main amplifier. To prevent the formation of a signal loop when a single tape deck is used, output signals are prevented from appearing at the REC OUT terminals when TAPE FUNCTION is selected with the TAPE DECK switch in the B (single) position.

- **Mic/guitar Signal Route**

  Input signals applied to the MIC1 and MIC2/GUITAR terminals are mixed after being passed through the respective amplifiers and level controls (VR301 and VR302). After being passed via an echo circuit and the echo level control (VR303), the output is mixed with a signal to which echo has not been applied, and is then passed to the three-element graphic equalizer for mixing with the source signal. The input stage also includes an ALC (Automatic Level Control) circuit used to prevent signal clipping when very large inputs are applied.

7.2 CIRCUIT DESCRIPTION

- **Equalizer Amplifier**

  This consists of an RIAA element included in the NFB loop of an operational amplifier (NJM4558).

- **Function Switch**

  The function switch consists of an electronic switching IC (PA4008) and a control IC (TC-4042). When one of the switches (S501 thru S504) is pressed, PA4008 is switched by an L level output from TC4042. When the power is first switched on, the tuner is selected automatically. For further details, refer to the sections on operation charts.

- **Simulated Stereo Circuit**

  Left channel signal is input to the phase shifter, which changes the signal phase at different frequencies, and its output is sent to the right channel. Thereby a "simulated" stereo effect from a monaural input signal is obtained.

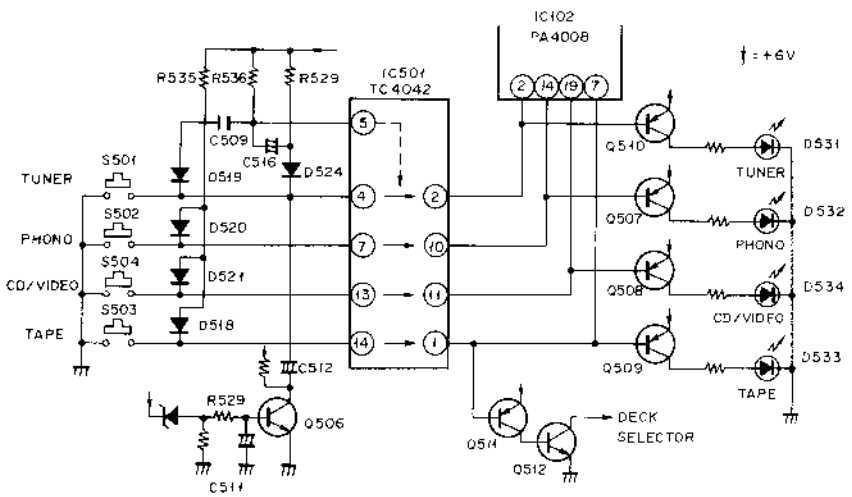

Fig. 7-1 Function control

www.manualscenter.com

- **Power Amplifier**

  With the same circuit configuration as the SA-05, a differential input circuit and a constant current load pre-driver are used in obtaining an output of 70W + 70W (8 ohms).

- **Rhythm Box**

  The rhythm box circuit consists of a rhythm pattern generator IC (LM8972B) and a sound source circuit. LM8972B generates rhythm pulse outputs from pins ⑩, ⑫, ⑬, and ⑮ synchronized with externally supplied input clock pulses. Eight separate rhythms can be generated, the desired rhythm being selected by selector signals from pins (③) thru (⑦). (See Table 7-1). In the SA-055, the three rhythms generated are rock, waltz, and swing. The respective rhythm pulse patterns are outlined in Fig. 7-2. The clock pulses are generated by an astable multivibrator, and the generator frequency (which controls the rhythm tempo) is varied by changing the charging voltage applied to the time constant circuit. (See Fig. 7-3). The variation range is about 1 to 10Hz.

  The generated rhythm pulse is passed to the sound source circuit where sound is generated. Then after the respective rhythm pulse for cymbals (pin ⑯), high-hat (pin ⑮), and snare drums (pin ⑩) is passed via an integrating circuit, the relevant transistors are triggered and the corresponding signal is passed to the output together with noise generated by Q408 and Q409. In addition, a sound is formed with a peak added to the frequency response curve by the output LC circuit. The rhythm pulse from the bass drum output (pin ⑫) is passed via an integrating circuit to trigger the oscillator circuit and subsequently change the generator output envelope.

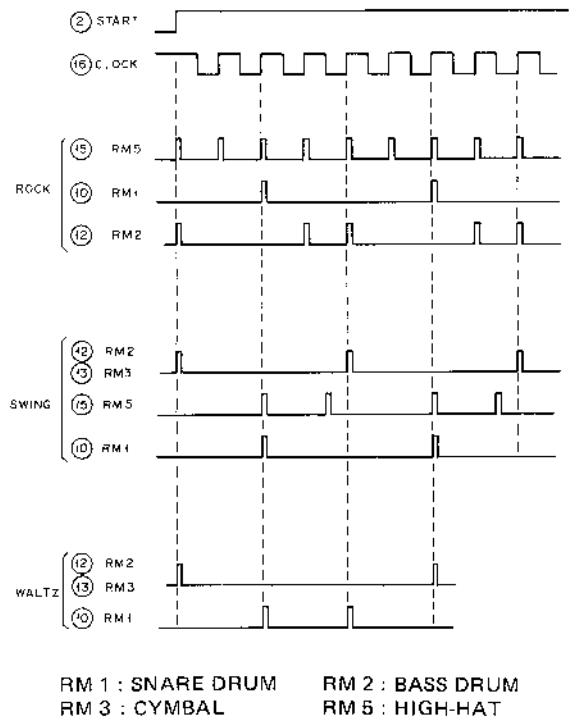

Fig. 7-2 Rhythm pulse

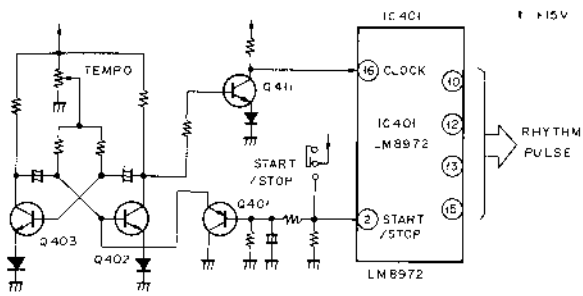

Fig. 7-3 Clock oscillator

Rhythm Pattern	Pin No. ③	④	⑤	⑥	⑦	
ROCK	L	L	H	L	L	
WALTZ	L	L	L	L	H	
SWING	L	L	H	H	L	
BEGUINE	H	L	L	L	L	NOT USED
BOSSA-NOVA	L	H	L	L	L	NOT USED
MARCH	L	L	L	H	L	NOT USED
BOSSA-ROCK	L	H	H	L	L	NOT USED
WALTZ-ROCK	L	L	L	H	H	NOT USED

Table 7-1 Rhythm selection

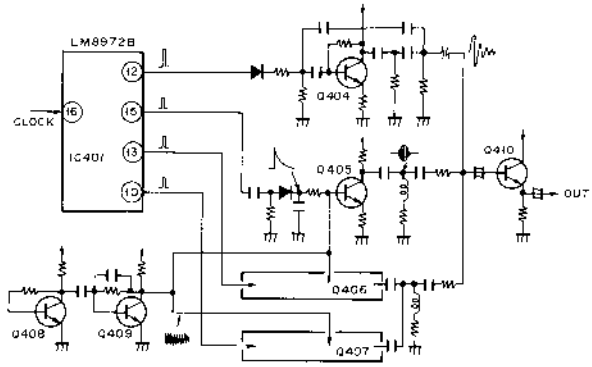

Fig. 7-4 Sound generator

- **ALC (Automatic Level Control) Circuit**

The basic configuration of the ALC circuit is outlined in Fig. 7-5. The output signal is rectified by D1, D2 and C2 and then smoothed to obtain a DC component used to drive Q1 and Q2. The input signal is thus attenuated by R1 and R2, thereby limiting any excessively large input signals.

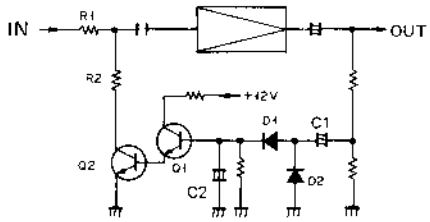

Fig. 7-5 ALC circuit

- **Graphic Equalizer**

This circuit is identical to the graphic equalizer used in the SG-05 (see circuit outlined in Fig. 7-6). The equalizer element consists of a semiconductor inductance type LC series resonance circuit. Cutting and boosting involves varying the equalizer amplifier gain at the center frequency.

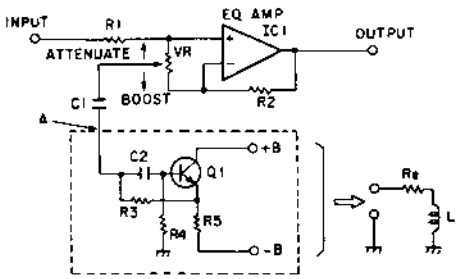

Fig. 7-6 Graphic equalizer

- **Echo Circuit**

Identical to the echo circuit used in CA-X7 and CA-100, this circuit makes use of a BBD (Bucket Brigade Device) IC (MN3008) and the clock pulse generator (TC4069). The echo effect is obtained by feedback of signals delayed by the BBD and subsequent repetition of the delay.

- **Display Circuit**

The FL (fluorescent tube) display circuit is shown in Fig. 7-7. S505 is the level meter and rhythm pattern display selector switch. In level meter display mode, an input signal is applied to pin (⑯) of IC502, and following logarithmic compression, an FL drive voltage corresponding to the input level is generated, thereby indicating that level in the FL display.

In rhythm pattern display mode, the rhythm pulse output from LM8972B is passed to the FL display where the rhythm pattern is desplayed.

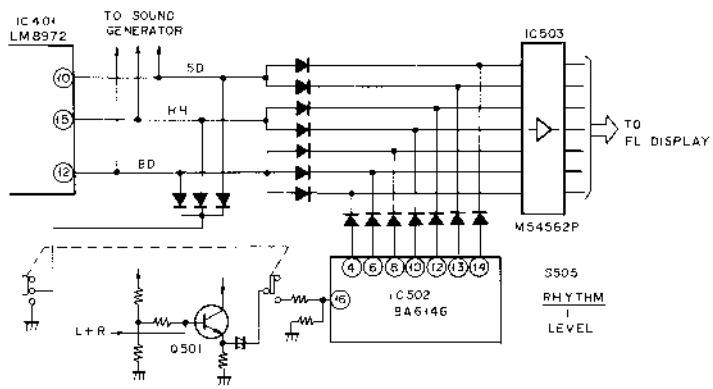

Fig. 7-7 Display circuit

www.manualscenter.com

7.3 IC DESCRIPTIONS

• LM8972B

Pin No.	Voltage	Pin Name	I/O	Description
1	O	V_{GG}	–	Ground connection.
2	H : 15 L : 0	START	I	Rhythm pulse output start and stop instruction input. H: Start, L: Stop
3	O	RS1	I	Rhythm pattern selector signal input. RS1 and RS2 are not used (connected to ground). RS3 RS4 RS5 ROCK H L L WALTZ L L H SWING H H L
4		RS2		
5	H : 15 L : 0	RS3		
6		RS4		
7		RS5		
8	15	Vss	–	Power supply voltage (+15V).
9	–	TL	O	Tempo output. Not used (left open).
10	0.5/14.5	RM1		Output of rhythm pulse. (Snare drums)
11	15	TEST		Not used (pulled up).
12	0.5/14.5	RM2		Output of rhythm pulse. (Bass drums)
13		RM3		(Cymbals)
14		RM4		(Not used – left open)
15		RM5		(High-hat)
16	15/1	CLOCK	I	Tempo setting clock input. 1 to 10Hz.

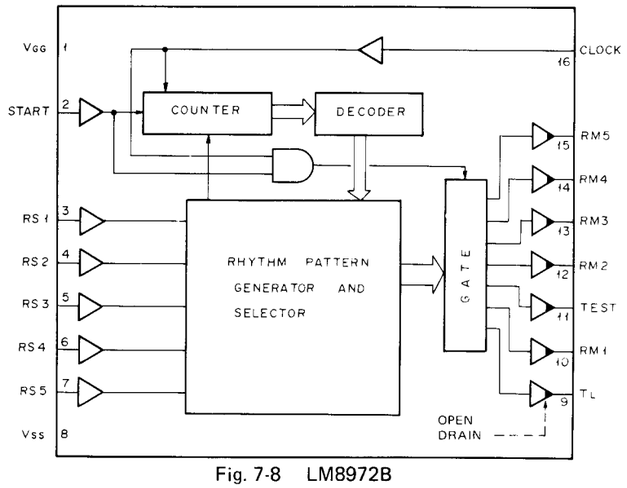

Fig. 7-8 LM8972B

Rhythm Pattern	Pin No. ③	④	⑤	⑥	⑦
ROCK	L	L	H	L	L
WALTZ	L	L	L	L	H
SWING	L	L	H	H	L
BEGUINE	H	L	L	L	L
BOSSA-NOVA	L	H	L	L	L
MARCH	L	L	L	H	L
BOSSA-ROCK	L	H	H	L	L
WALTZ-ROCK	L	L	L	H	H

NOT USED

Table 7-2 Rhythm selection

• BA6146

Pin No.	Voltage	Pin Name	I/O	Description
1	–	DET	–	Connection to the CR used in determining the FL "on" status hold time.
2	0	GND	–	Ground connection.
3	10	−20	O	H output generated and the corresponding FL segments switched on if the input voltage exceeds the vlaue indicated in the column to the left. (in mV units).
4	18	−15		Ditto
5	32	−10		Ditto
6	45	−7		Ditto
7	56	−5		Ditto
8	70	−3		Ditto
9	90	−1		Ditto
10	100	0		Ditto
11	110	+1		Ditto
12	140	+3		Ditto
13	180	+5		Ditto
14	250	+8		Ditto
15	15	Vcc	–	Power supply voltage (+15V).
16	–	IN	I	Signal voltage input.

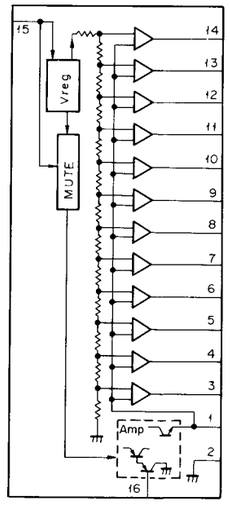

Fig. 7-9 BA6146

7.4 OPERATION CHARTS

• Power ON

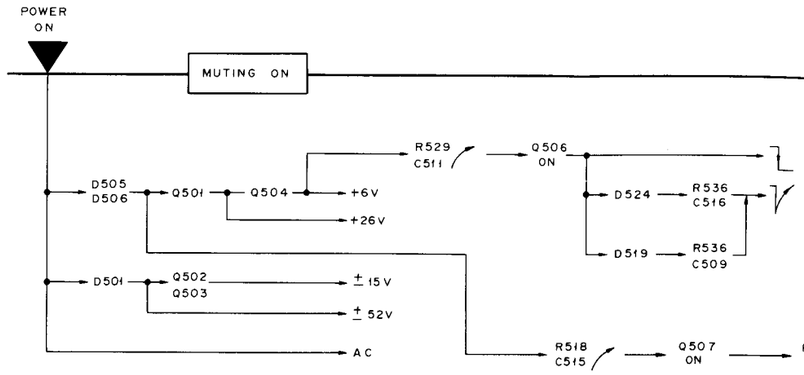

• Function (TAPE)

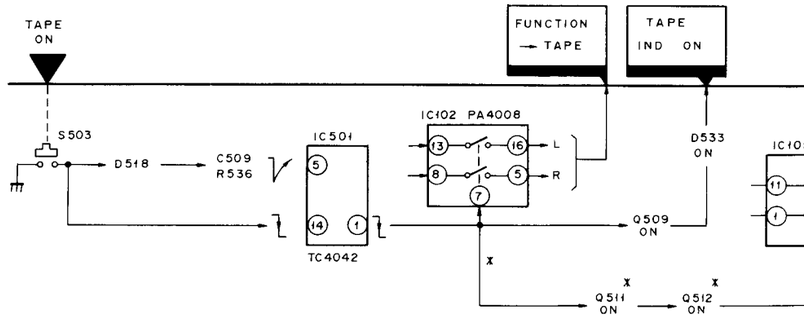

www.manualscenter.com

Pin Name	I/O	Description
DET	–	Connection to the CR used in determining the FL "on" status hold time.
GND	–	Ground connection.
-20	O	H output generated and the corresponding FL segments switched on if the input voltage exceeds the vlaue indicated in the column to the left. (in mV units).
-15		Ditto
-10		Ditto
-7		Ditto
-5		Ditto
-3		Ditto
-1		Ditto
0		Ditto
+1		Ditto
+3		Ditto
+5		Ditto
+8		Ditto
Vcc	–	Power supply voltage (+15V).
IN	I	Signal voltage input.

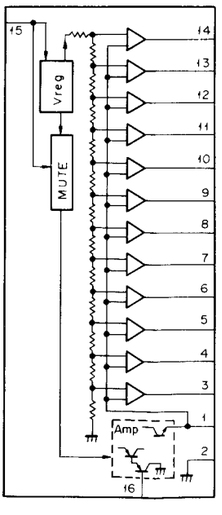

Fig. 7-9 BA6146

7.4 OPERATION CHARTS

• Power ON

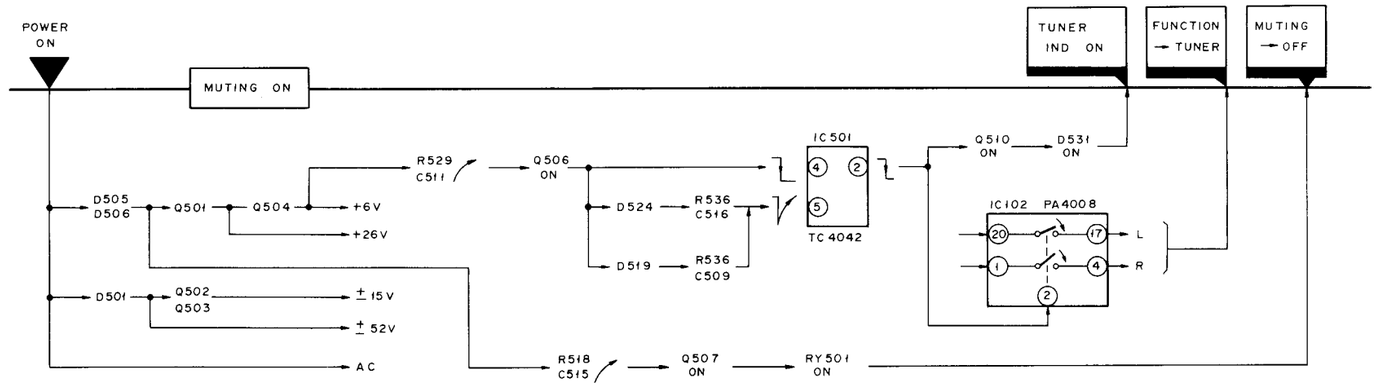

• Function (TAPE)

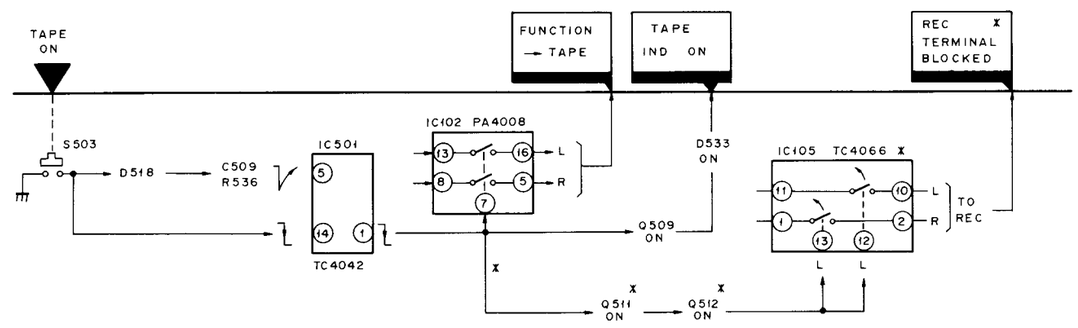

*Note: Operations with * mark does not take place if PHONO, TUNER or CD/VIDEO is selected.*

www.manualscenter.com

8. PACKING

Parts List

Mark	No.	Part No.	Description
	1.	AHA-377	Side pad
	2.	ARB-603	Operating instructions (English)
	3.	AKX-082	Plug adaptor
	4.	ANR-809	Cord holder
	5.	AHE-329	Packing case

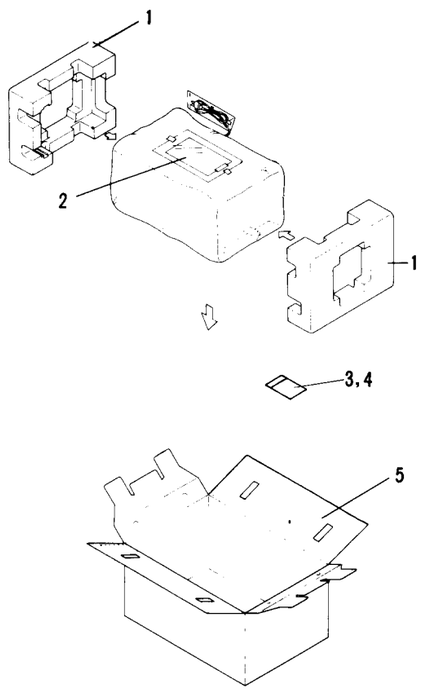

9. EXPLODED VIEW AND PARTS LIST

NOTES:
- *Parts without part number cannot be supplied.*
- *The ⚠ mark found on some component parts indicates the importance of the safety factor of the part. Therefore, when replacing, be sure to use parts of identical designation.*
- *For your Parts Stock Control, the fast moving items are indicated with the marks ★★ and ★.*
  ★★ GENERALLY MOVES FASTER THAN ★.
  This classification shall be adjusted by each distributor because it depends on model number, temperature, humidity, etc.

Mark	No.	Part No.	Description
	1.	ANE-483	Bonnet
	2.	AAD-454	Push knob (POWER)
	3.	AEC-800	Flexible ring
	4.	ANM-606	Front panel assembly
	5.	AAD-451	Slide knob A
	6.	AAD-821	Push knob B (MIC2/GUITAR)
	7.	AAD-450	Slide knob B (MASTER)
	8.	AAD-453	Slide knob C (BALANCE)
	9.	AAD-455	Push knob A
	10.	AAD-815	Push knob (RHYTHM)
	11.	GWV-121	FL assembly
	12.	AEP-124	Push plate assembly (FUNCTION)
⚠ ★★	13.	AEK-308	Fuse (5A)
	14.	AEC-471	Nylon rivet
⚠ ★★	15.	ASG-541	Push switch (POWER)
	16.	GWY-103	Volume assembly
	17.	GWY-104	Microphone jack assembly
	18.	GWM-356	Complex assembly
⚠ ★	19.	ATS-110	Power transformer (120V)
⚠	20.	AKP-501	AC socket
⚠	21.	ADG-073	AC power cord
	22.	AEC-756	Insulating sheet
⚠ ★★	23.	2SC3546-O* (2SC3546-R*)	Power transistor
⚠ ★★	24.	2SA1389-O* (2SA1389-R*)	Power transistor
	25.	ABA-258	Screw
	26.	GWK-246	AF assembly
	27.	AEC-784	Cabinet bumper
	28.	BBZ30P080FZK	Screw (3 x 8)
	29.	VMZ30P060FMC	Screw (3 x 6)
	30.	VMZ30P060FZB	Screw (3 x 6)
	31.	VBZ30P060FZK	Screw (3 x 6)
	32.	VBZ30P080FZK	Screw (3 x 8)
	33.	AAD-452	Slide knob

Mark	No.	Part No.	Description
	51.		Slider
	52.		Slide shaft
	53.		Knob base A
	54.		Front panel
	55.		Knob base B
	56.		Slider
	57.		Knob guide
	58.		Panel stay
	59.		Headphone jack assembly
	60.		Jack holder
	61.		Push plate
	62.		Tact sheet
	63.		Mounting plate
	64.		Speaker switch assembly
	65.		Shield cover
	66.		Cushion
	67.		Balance volume assembly
	68.		Fuse assembly
	69.		Bind
	70.		Side frame
	71.		PCB spacer
	72.		Nylon rivet
	73.		Rear panel
	74.		Heat sink
	75.		Switch stopper
	76.		Terminal (GND)
	77.		Tape deck switch assembly
	78.		Switch spacer
	79.		Transformer frame
	80.		Chassis

*The value of hfe must be the same.

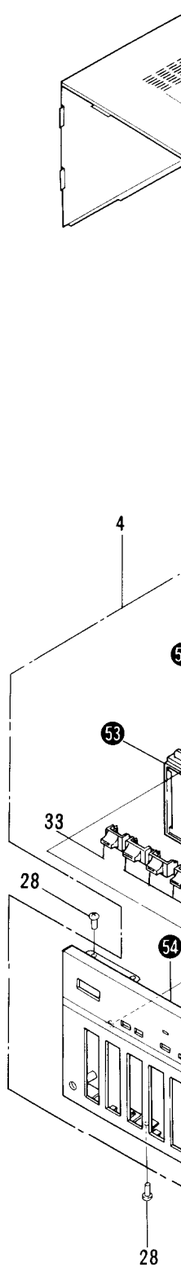

www.manualscenter.com

portance of the
parts of identical
with the marks
pends on model

n

A
el
B
e
e jack assembly
r
plate
witch assembly
er
lume assembly
nbly
r
t
pper
GND)
switch assembly
cer
er frame

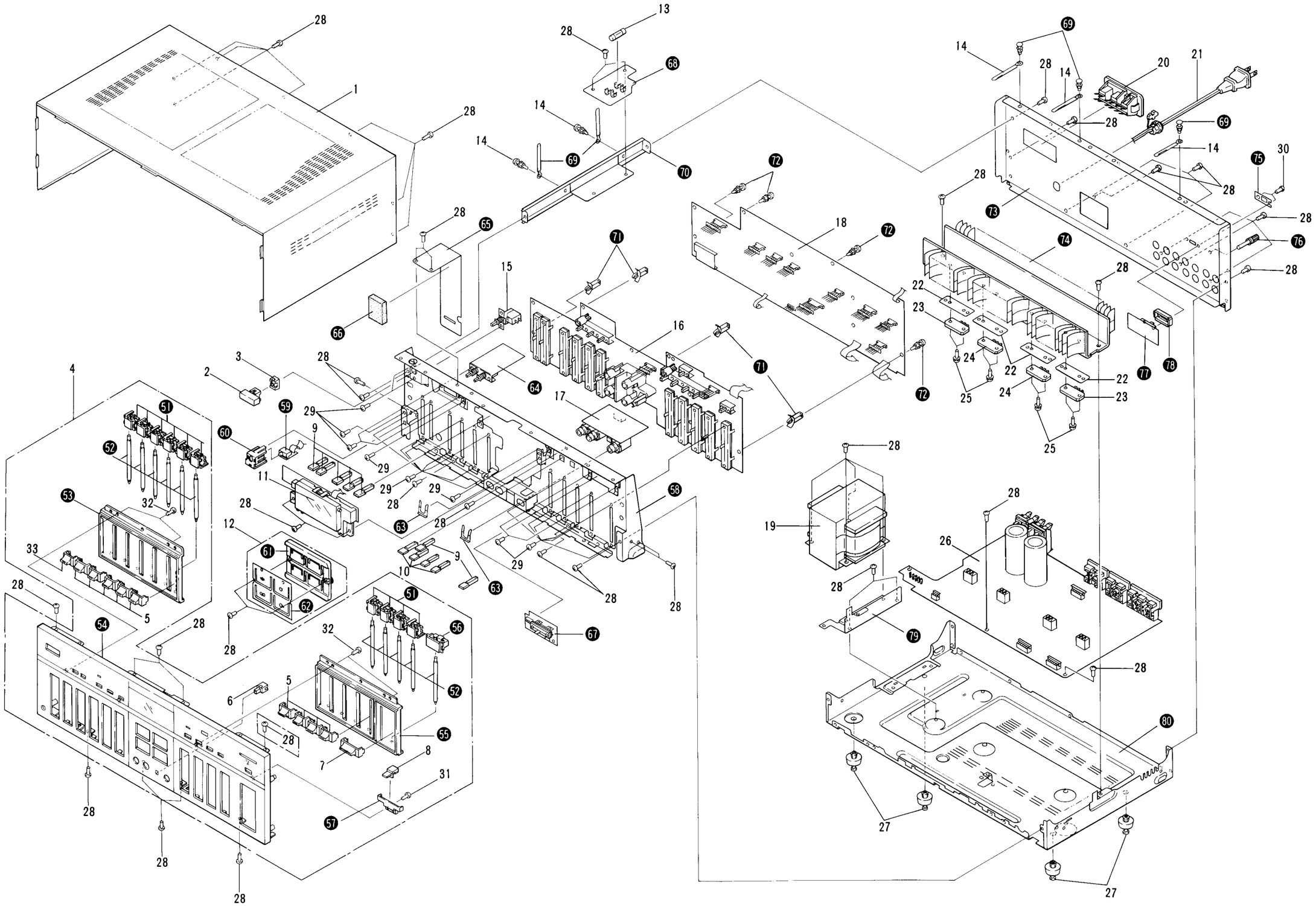

www.manualscenter.com

10. P.C.BOARDS CONNECTION DIAGRAM

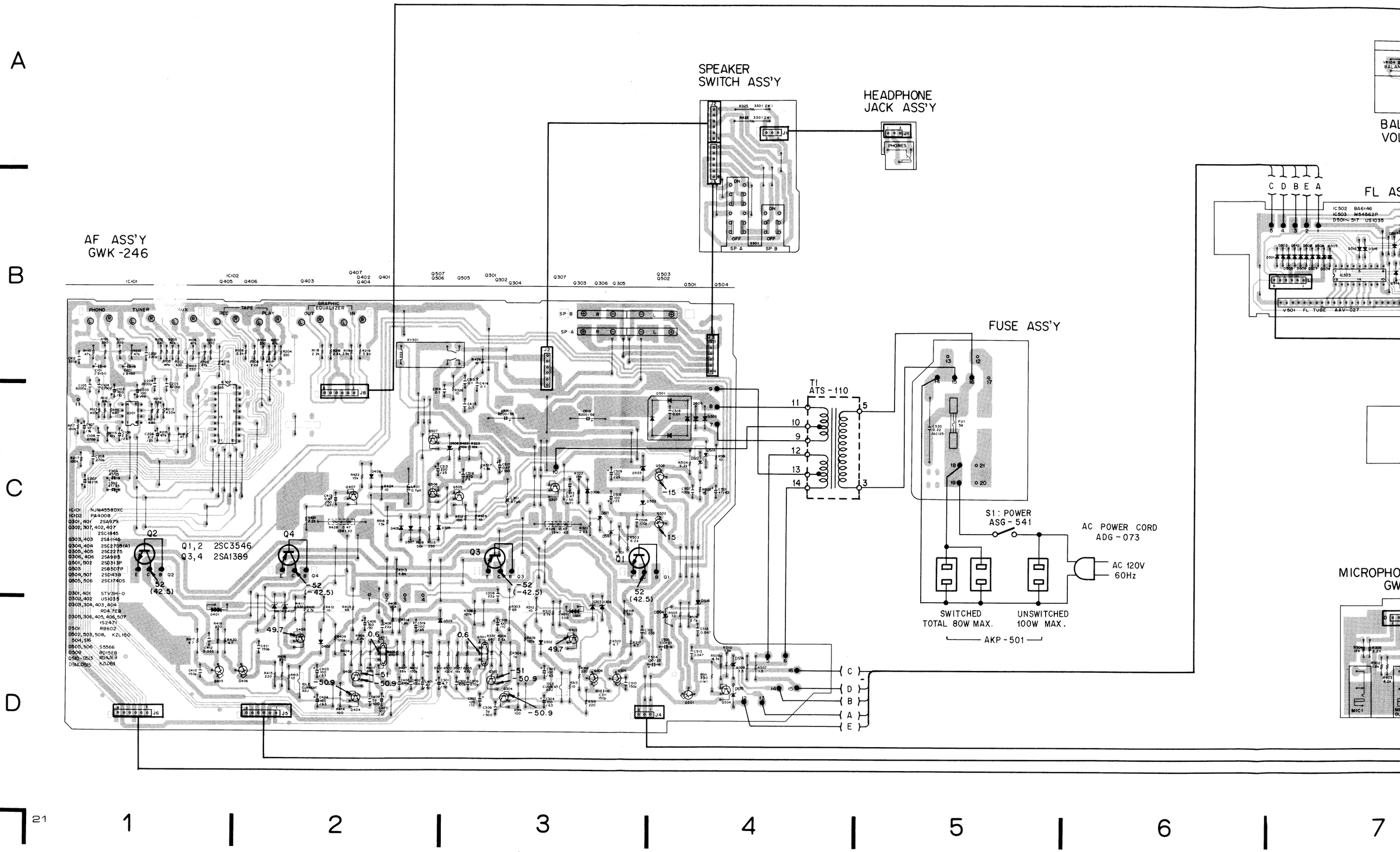

www.manualscenter.com

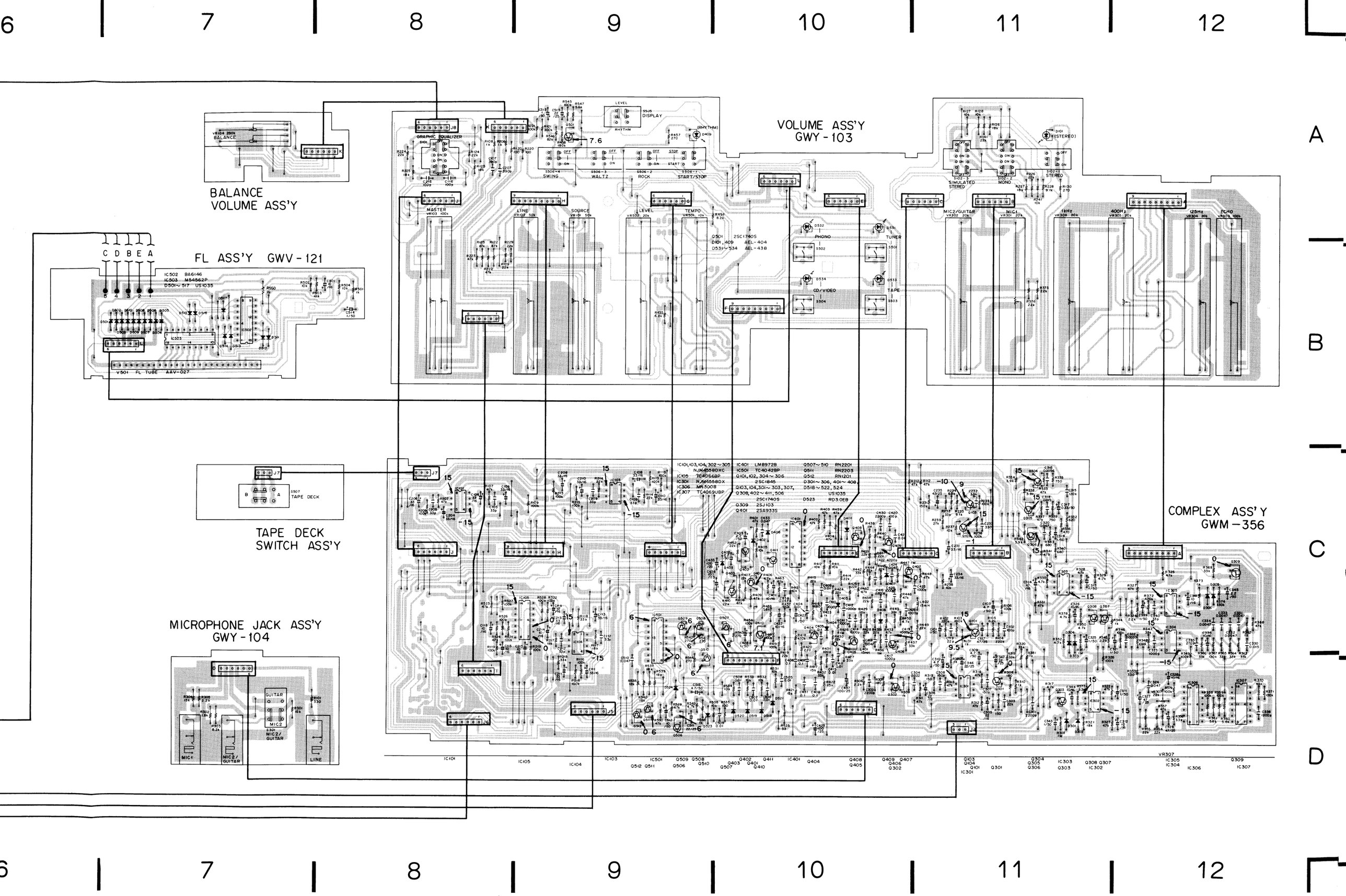

www.manualscenter.com

11. SCHEMATIC DIAGRAM

- **External Appearances of Transistors and IC's**

2SD313P

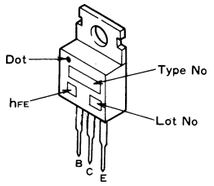

2SA1389
2SC3546

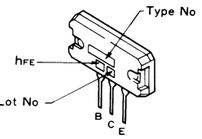

LM8972B
TC4042BP
BA6146

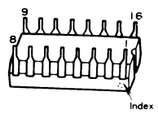

2SB507P

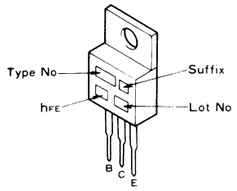

2SA985
2SC2275

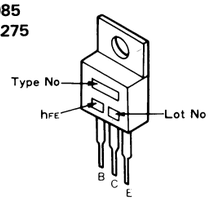

NJM4558DX
NJM4558DXC

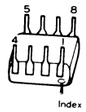

2SC1845
2SD438

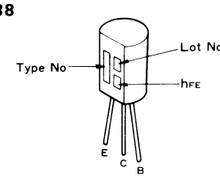

2SA985

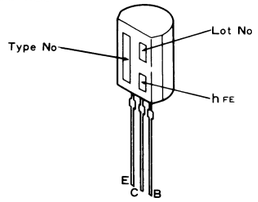

M54562P

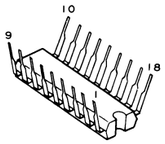

2SJ103

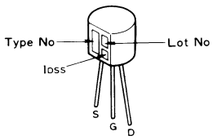

2SA933S
2SC1740S

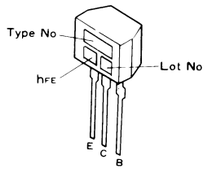

PA4008

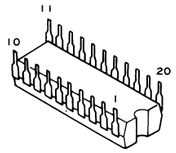

2SA1145

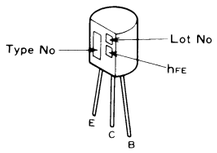

2SA1048
2SC2458

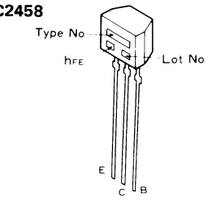

RN2201
RN2203
RN1201

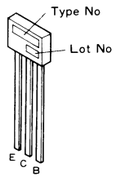

2SA979

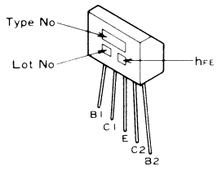

TC4066BP
TC4069UBP

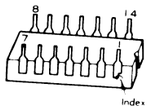

MN3008

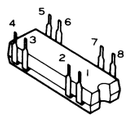

2SC2705/A/

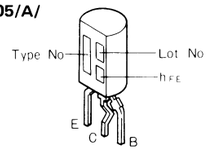

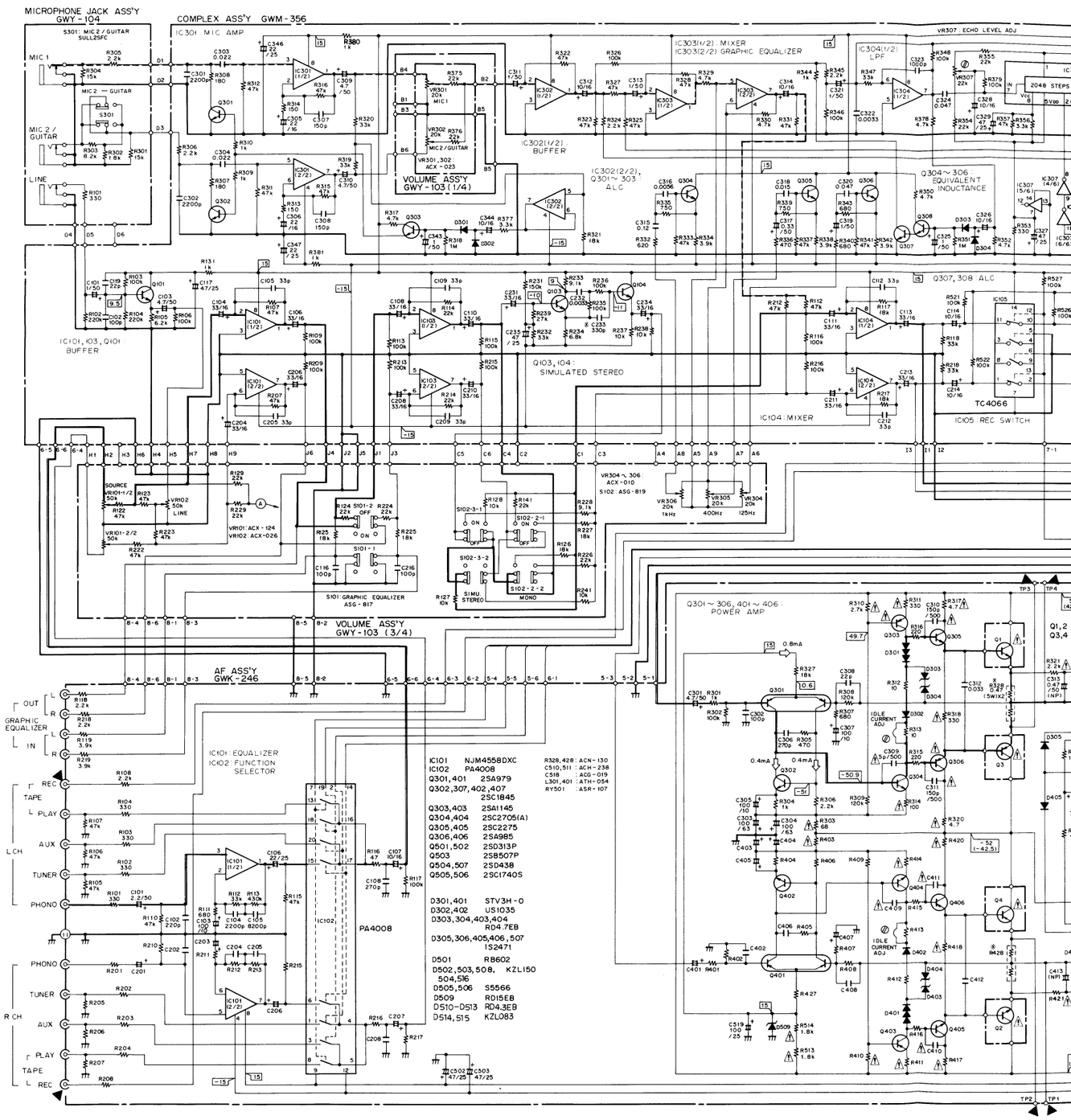

www.manualscenter.com

NOTE:
The indicated semiconductors are representative ones only. Other alternative semiconductors may be used and are listed in the parts list.

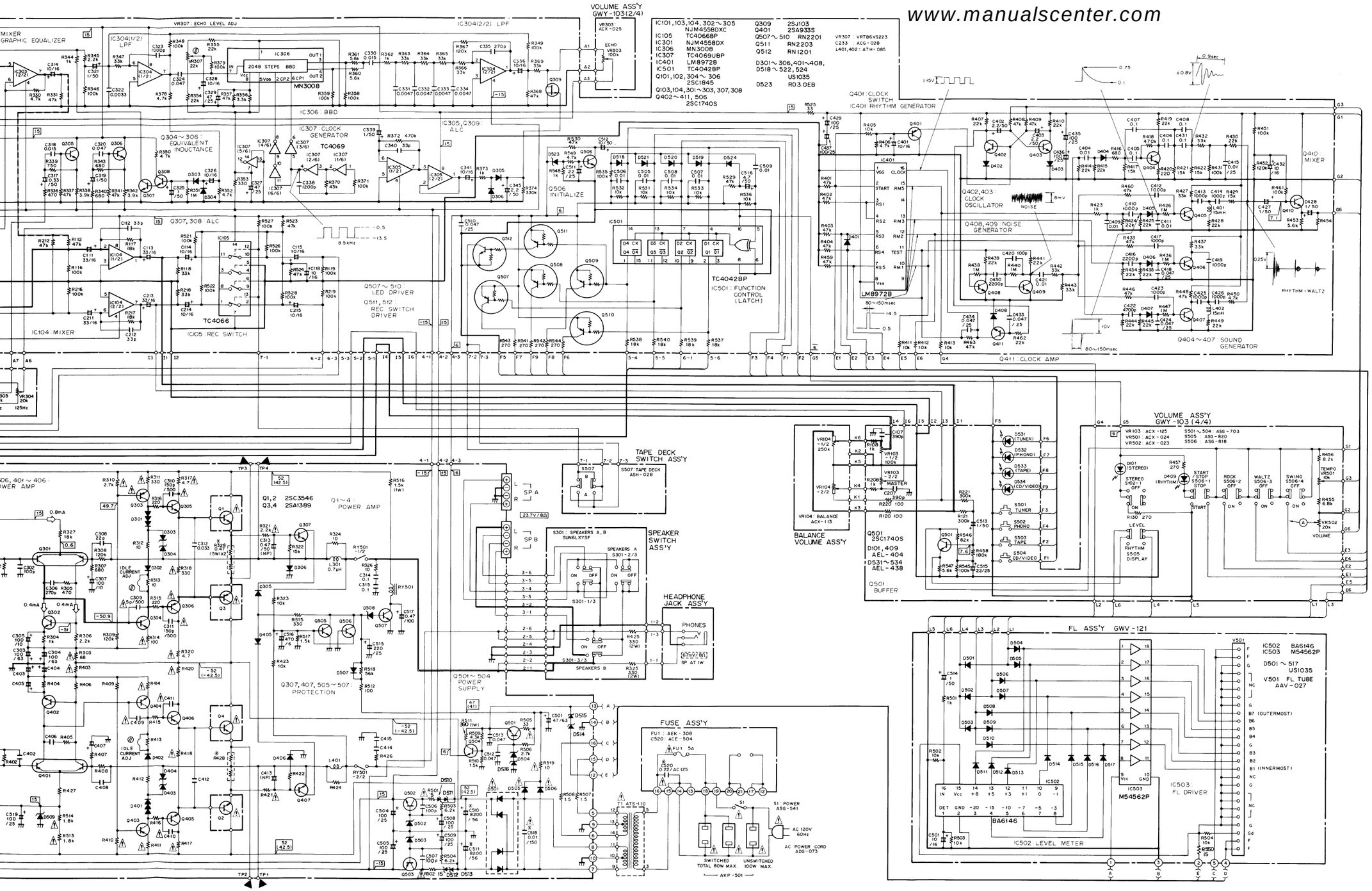

www.manualscenter.com

1. RESISTORS:
Indicated in Ω, ¼W, ⅙W,±5% tolerance unless otherwise noted k; kΩ, M; MΩ, (F); ±1%, (G); ±2%, (K), ±10%, (M); ±20% tolerance

2. CAPACITORS:
Indicated in capacity (μF)/voltage (V) unless otherwise noted p; pF. Indication without voltage is 50V except electrolytic capacitor.

3. VOLTAGE CURRENT.
V; Signal voltage at (W+ W, 8Ω) output (1kHz)
; DC voltage (V) at no input signal
Value in ( ) is DC voltage at rated power.
mA; DC current at no input signal

4. OTHERS:
; Signal route.
; Adjusting point.
The ⚠ mark found on some component parts indicates the importance of the safety factor of the part. Therefore, when replacing, be sure to use parts of identical designation.
※ marked capacitors and resistors have parts numbers.

This is the basic schematic diagram, but the actual circuit may vary due to improvements in design.

SWITCHES:

VOLUME ASS'Y		
S101 : GRAPHIC EQUALIZER		ON – OFF
S102-1 : STEREO		ON – OFF
S102-2 : MONO		ON – OFF
S102-3 : SIMULATED STEREO		ON – OFF
S501 : TUNER		ON – OFF
S502 : PHONO		ON – OFF
S503 : TAPE		ON – OFF
S504 : CD / VIDEO		ON – OFF
S505 : DISPLAY		LEVEL – RHYTHM
S506-1 : START / STOP		START – STOP
S506-2 : ROCK		ON – OFF
S506-3 : WALTZ		ON – OFF
S506-4 : SWING		ON – OFF
MICROPHONE JACK ASS'Y		
S301 : MIC 2 / GUITAR		MIC 2 – GUITAR
TAPE DECK SWITCH ASS'Y		
S507 : TAPE DECK		A(DOUBLE) – B(SINGLE)
SPEAKER SWITCH ASS'Y		
S301-1,2 : SPEAKERS A		ON – OFF
S301-3 : SPEAKERS B		ON – OFF
OUTSIDE OF PC BOARD		
S1 : POWER		ON – OFF

The underlined indicates the switch position.

www.manualscenter.com

12. ELECTRICAL PARTS LIST

NOTES:

- *When ordering resistors, first convert resistance values into code form as shown in the following examples.*

  Ex. 1 When there are 2 effective digits (any digit apart from 0), such as 560 ohm and 47k ohm (tolerance is shown by J = 5%, and K = 10%).

560Ω	*56 x 10^1*	*561*	*RD¼PS 5 6 1 J*
47kΩ	*47 x 10^3*	*473*	*RD¼PS 4 7 3 J*
0.5Ω	*0R5*		*RN2H 0 R 5 K*
1Ω	*010*		*RS1P 0 1 0 K*

  Ex. 2 When there are 3 effective digits (such as in high precision metal film resistors).

5.62kΩ	*562 x 10^1*	*5621*	*RN¼SR 5 6 2 1 F*

- *The ⚠ mark found on some component parts indicates the importance of the safety factor of the part. Therefore, when replacing, be sure to use parts of identical designation.*
- *For your Parts Stock Control, the fast moving items are indicated with the marks ★★ and ★.*

  ★★ GENERALLY MOVES FASTER THAN ★.

  This classification shall be adjusted by each distributor because it depends on model number , temperature, humidity, etc.

Miscellaneous

P.C. BOARD ASSEMBLIES

Mark	Symbol & Description	Part No.
	AF assembly	GWK-246
	Complex assembly	GWM-356
	FL assembly	GWV-121
	Volume assembly	GWY-103
	Microphone jack assembly	GWY-104
	Speaker switch assembly	Non supply
	Fuse assembly	Non supply
	Headphone jack assembly	Non supply
	Tape deck switch assembly	Non supply
	Balance volume assembly	Non supply

SEMICONDUCTORS

Mark	Symbol & Description	Part No.
⚠ ★★	Q1, Q2	2SA1389-O* (2SA1389-R*)
⚠ ★★	Q3, Q4	2SC3546-O* (2SC3546-R*)

*The value of hfe must be the same.

TRANSFORMER

Mark	Symbol & Description		Part No.
⚠ ★	T1	Power transformer (120V)	ATS-110

SWITCH

Mark	Symbol & Description		Part No.
⚠ ★★	S1	Push switch (POWER)	ASG-541

FUSE

Mark	Symbol & Description		Part No.
⚠ ★★	FU1	Fuse (5A)	AEK-308

OTHERS

Mark	Symbol & Description	Part No.
⚠	AC socket	AKP-501
⚠	AC power cord	ADG-073

Complex Assembly (GWM-356)

SEMICONDUCTOR

Mark	Symbol & Description	Part No.
★★	IC306	MN3008
★★	IC101, IC103, IC104, IC302 – IC305	NJM4558DXC
★★	IC501	TC4042BP
★★	IC105	TC4066BP
★★	IC307	TC4069UBP
★★	IC301	NJM4558DX
★★	IC401	LM8972B
★★	Q401	2SA933S
★	Q103, Q104, Q301 – Q303, Q307, Q308, Q402 – Q407, Q410, Q411, Q506	2SC1740S
★★	Q512	RN1201
★★	Q507 – Q510	RN2201
★★	Q511	RN2203
★★	Q101, Q102, Q304 – Q306	2SC1845
★★	Q309	2SJ103
★★	Q408, Q409	2SC2389
★	D523	RD3.0EB
★	D301 – D306, D401 – D408, D518 – D524	US1035

COILS

Mark	Symbol & Description	Part No.
	L401, L402 (15mH)	ATH-085

CAPACITORS

Mark	Symbol & Description	Part No.
	C233 Ceramic (330p/50V)	ACG-028
	C102, C420	CCDSL 101J 50
	C307, C308	CCDSL 151J 50
	C119	CCDSL 220J 50
	C335	CCDSL 271J 50
	C105, C109, C112, C205, C209, C212, C340	CCDSL 330J 50
	C317	CEA R33M 50L
	C101, C311, C313, C319, C321, C325, C339, C343, C427, C428	CEA 010M 50L
	C114	CEA 100M 16L
	C115, C118, C214, C215, C312, C314, C326, C328, C336, C341	CEA 100M 16L
	C344, C401, C432	CEA 100M 16L
	C512	CEA 100M 50L
	C435	CEA 101M 25L
	C429, C436, C437	CEA 101M 25L
	C345, C402, C403	CEA 2R2M 50L
	C305, C306, C346, C347, C511	CEA 220M 25L
	C104, C106, C108, C110, C111, C113, C204, C206, C208, C210, C211, C213, C231, C234	CEA 330M 16L
	C103, C309, C310, C516	CEA 4R7M 50L
	C117	CEA 470M 25L
	C235, C327, C329	CEA 470M 25L
	C422	CKDYB 472K 50
	C506 – C508	CKDYF 103Z 50
	C418, C424, C433, C434, C510	CKDYX 473M 25
	C323, C410, C412, C413, C414, C417, C419, C423, C425, C426	CQMA 102J 50
	C404, C409, C411, C421, C505 – C509	CQMA 103K 50
	C405 – C408, C431	CQMA 104K 50
	C338	CQMA 122K 50
	C315	CQMA 124K 50
	C318, C330	CQMA 153K 50
	C301, C302, C416, C430	CQMA 222J 50
	C303, C304	CQMA 223K 50
	C232, C322	CQMA 332K 50
	C331 – C334	CQMA 472K 50
	C320, C324	CQMA 473K 50
	C316	CQMA 562K 50
	C415	CQMA 103K 50

RESISTORS

Note: When ordering resistors, convert the resistance value into code form, and then rewrite the part no. as before.

Mark	Symbol & Description	Part No.
★	VR307 Semi-fixed (22k)	VRTB6VS223
	Other resistors	RD1/8PM □□□J

Tape Deck Switch Assembly

SWITCH

Mark	Symbol & Description	Part No.
★★	S507 Slide switch (TAPE DECK SELECTOR)	ASH-028

FL Assembly (GWV-121)

SEMICONDUCTOR

Mark	Symbol & Description	Part No.
★★	IC502	BA6146
★★	IC503	M54562P
★	D501 – D517	US1035

CAPACITORS

Mark	Symbol & Description	Part No.
	C514	CEA 010M 50L
	C501	CEA 100M 16L

RESISTORS

Note: When ordering resistors, convert the resistance value into code form, and then rewrite the part no. as before.

Mark	Symbol & Description	Part No.
	R501 – R504	RD1/8PM □□□J

OTHER

Mark	Symbol & Description	Part No.
★	V501 FL tube	AAV-027
	Socket	AKP-075

Volume Assembly (GWY-103)

SEMICONDUCTORS

Mark	Symbol & Description	Part No.
★	D101, D409	AEL-404
★	D531 – D534	AEL-438
★★	Q501	2SC1740S

SWITCHES

Mark	Symbol & Description	Part No.
★★	S101 Push switch (GRAPHIC EQUALIZER)	ASG-817

www.manualscenter.com

★★	S102	Push switch (MODE)	ASG-819
★★	S501 – S504	Tact switch (FUNCTION)	ASG-703
★★	S505	Push switch (DISPLAY)	ASG-820
★★	S506	Push switch (RHYTHM)	ASG-818

CAPACITORS

Mark	Symbol & Description	Part No.
	C116, C216	CCDSL 101J 50
	C513	CEA 010M 50L
	C515	CEA 220M 25L
	C107, C207	CKDYB 391K 50

RESISTORS

Note: When ordering resistors, convert the resistance value into code form, and then rewrite the part no. as before.

Mark	Symbol & Description	Part No.
★	VR101 Slide variable 50k (SOURCE)	ACK-124
★	VR102 Slide variable 50k (LINE)	ACX-026
★	VR103 Slide variable 100k (MASTER)	ACX-125
★	VR301, VR302, VR502 Slide variable 20k (MIC1, MIC2, RHYTHM)	ACX-023
★	VR303 Slide variable 100k (ECHO LEVEL)	ACX-025
★	VR304, VR305, VR306 Slide variable 20k (MIC TONE)	ACX-010
★	VR501 Slide variable 10k (RHYTHM TEMPO)	ACX-024
	Other resistors	RD1/8PM □□□J

Microphone Jack Assembly (GWY-104)

SWITCH

Mark	Symbol & Description	Part No.
★★	S301 Push switch (MIC2/GUITAR)	SULL2SFC

RESISTORS

Mark	Symbol & Description	Part No.
	All resistors	RD1/8PM □□□J

OTHERS

Mark	Symbol & Description	Part No.
	Mic jack (MIC1, MIC2/GUITAR, LINE)	AKN-054
	6P socket	AKP-045

Balance Volume Assembly (GWY-105)

RESISTOR

Mark	Symbol & Description	Part No.
★	VR104 Slide variable 250k	ACX-113

SOCKET

Mark	Symbol & Description	Part No.
	6P socket	AKP-075

AF Assembly (GWK-246)

SEMICONDUCTORS

Mark	Symbol & Description	Part No.
★★	IC101	NJM4558DXC
★★	IC102	PA4008
★★	Q303, Q403	2SA1145/A/
★★	Q301, Q401	2SA979
★★	Q306, Q406	2SA985
★★	Q503	2SB507P
★★	Q505, Q506	2SC1740S (2SC2458)
★★	Q302, Q307, Q402, Q407	2SC1845
★★	Q305, Q405	2SC2275
★★	Q304, Q404	2SC2705/A/
★★	Q501, Q502	2SD313P
★★	Q504, Q507	2SD438
★	D514, D515	KZL083
★	D502, D503, D508	KZL150
⚠ ★	D501	RB602
★	D509	RD15EB
★	D504, D516	KZL150
★	D510 – D513	RD4.3EB
★	D303, D304, D403, D404	RD4.7EB
★	D301, D401	STV3H
⚠ ★	D505, D506	S5566
★	D302, D402	US1035
★	D305, D306, D405, D406, D507	1S2471

RELAY

Mark	Symbol & Description	Part No.
★★	RY501 Relay	ASR-107

COILS

Mark	Symbol & Description	Part No.
	L301, L401 AF choke coil (0.7μH)	ATH-054

www.manualscenter.com

CAPACITORS

Mark	Symbol & Description	Part No.
	C518	ACG-019
	C510, C511	ACH-238
⚠	C309, C409	CCDSL 050C 500
	C302, C402, C506, C507	CCDSL 101J 50
	C310, C311, C410, C411	CCDSL 151K 500
	C308, C408	CCDSL 220J 50
	C102, C202	CCDSL 221J 50
	C108, C208, C306, C406	CCDSL 271J 50
	C101, C201	CEANL 2R2M 50
	C413	CEANP R47M 50
	C313	CEANP R47M 50
	C517	CEA R47M 100L
	C107, C207	CEA 100M 16L
⚠	C103, C203, C305, C307, C405, C407	CEA 101M 10L
	C504, C505, C508, C509, C519	CEA 101M 25L
	C303, C304, C403, C404	CEA 101M 63L
	C106, C206	CEA 220M 25L
	C515	CEA 221M 25L
	C301, C401	CEA 4R7M 50L
	C502, C503	CEA 470M 25L
	C501	CEA 470M 63L
	C516	CEA 471M 6L
	C512	CKDYF 473Z 50
	C314, C315, C414, C415	CQMA 104J 50
	C104, C204	CQMA 222J 50
	C312, C412	CQMA 333J 50
	C105, C205	CQMA 822J 50

RESISTORS

Note: When ordering resistors, convert the resistance value into code form, and then rewrite the part no. as before.

Mark	Symbol & Description	Part No.
	R328, R428 Wire wound (0.47/5W x 2)	ACN-130
	R512	RD1/4PMF101J
⚠	R310, R321, R410, R421, R505, R513 – R515, R519	RD1/4PMF □□□J
	R315, R316, R415, R416	RFA1/4PS221J
⚠	R303, R311, R314, R317, R318, R320, R403, R411, R414, R417, R418, R420, R501, R502	RFA1/4PS □□□J
	R116, R216, R309, R312, R313, R322 – R324, R326, R409, R412, R413, R423, R424, R426, R503, R504, R506 – R510, R517, R518	RD1/4PM □□□J
	R516	RS1LMF152J
	R511	RS1LMF391J
	Other resistors	RD1/8PM □□□J

OTHERS

Mark	Symbol & Description	Part No.
	Terminal (TAPE, GRAPHIC EQUALIZER)	AKB-094
	Terminal (PHONO, TUNER, CD/VIDEO)	AKB-095
	Terminal (SPEAKERS)	AKE-102
	Transistor socket	AKH-017
	Screw (3 x 6)	PBZ30P060MFC

Fuse Assembly

CAPACITOR

Mark	Symbol & Description	Part No.
	C520 Metalized polyester (0.22/AC125V)	ACE-504

Headphone Jack Assembly

OTHER

Mark	Symbol & Description	Part No.
	Headphone jack (PHONES)	AKN-202

Speaker Switch Assembly

SWITCH, RESISTORS

Mark	Symbol & Description	Part No.
	R325, R425	RS2LMF331J
★★	S301 Push switch (SPEAKERS)	SUN6LXYSF

www.manualscenter.com

13. ADJUSTMENTS

Idle Current Adjustment

1. Disconnect the speakers, set the MASTER volume to minimum position, and let the amplifier warm up for 10 minutes after switching the power on.
2. Using a DC voltmeter, check that the voltage readings between TP4 (+) and TP3 (-) (for left channel) and between TP1 (+) and TP2 (-) (for right channel) lie in the 1.9mV to 54.5mV range. If the voltage is below 2.2mV, cut the relevant jumper wire (jumper wire L for the left channel, and jumper wire R for the right channel).

Note: A voltage above 54.5mV indicates probable circuit failure which will have to be properly checked.

Echo Level Adjustment

1. Remove the front panel.
2. Set the ECHO LEVEL volume (VR303) and MIC1 volume (VR301) to maximum position.
3. Connect an audio generator to MIC1 jack, and an oscilloscope to REC terminal.
4. Apply a 1kHz, 20~30mV sine wave signal to MIC1 jack.
5. Adjust VR307 to obtain symmetrical clipping of the output waveform at REC terminal.

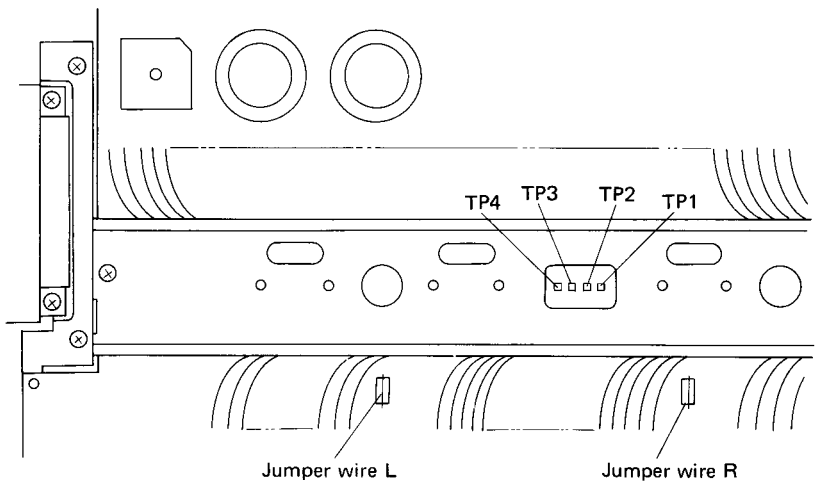

Fig. 12-1 Idle current adjustments

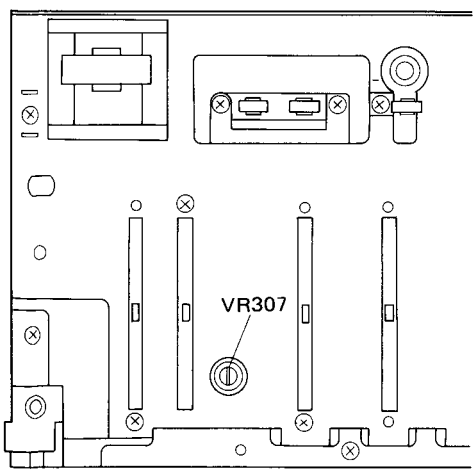

Fig. 12-2 Echo level adjustment 1

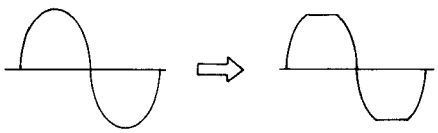

Fig. 12-3 Echo level adjustment 2

www.manualscenter.com

www.manualscenter.com

13. RÉGLAGE

Réglage de courant déwatté

1. Débrancher les haut-parleurs, placer la commande de volume principale MASTER en position minimum et laisser les circuits de l'amplificateur chauffer pendant 10 minutes après avoir mis sous tension.
2. Utiliser un voltmètre à courant continu et s'assurer que les indications de tension entre les bornes TP4 (+) et TP3 (-) (pour le canal de gauche) et entre les bornes TP1 (+) et TP2 (-) (pour le canal de droite) se trouvent entre les limites de 1,9mV et 54,5mV. Si la tension relevée est inférieure à 2,2mV, couper le fil de liaison correspondant (fil de liaison L pour le canal de gauche et fil de liaison R pour le canal de droite).

REMARQUE:
Une indication de tension supérieure à 54,5mV indique une panne probable d'un circuit qui doit être contrôle en détail.

Réglage du niveau d'écho

1. Déposer la plaque de façade.
2. Placer le potentiomètre de volume ECHO LEVEL (VR303) et le potentiomètre de volume MIC1 (VR301) en position maximum.
3. Raccorder un générateur de signaux audio à la prise MIC1 et un oscilloscope à la borne REC.
4. Injecter un signal de 1kHz à onde sinusoïdale de 20 à 30mV à la prise MIC1.
5. Régler VR307 pour obtenir un écrêtage symétrique des oscillogrammes de sortie obtenus à la borne REC.

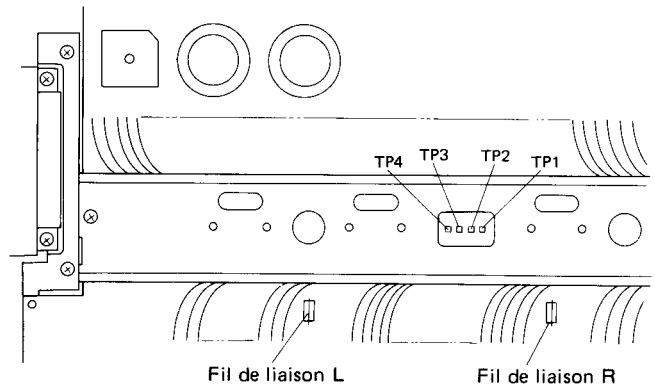

Fig. 12-1 Réglages de courant déwatté

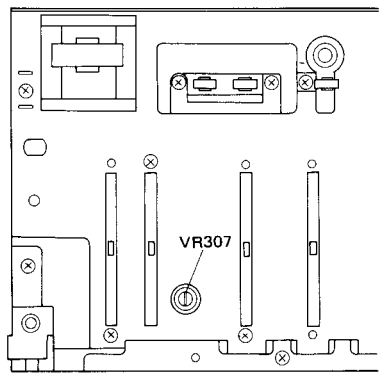

Fig. 12-2 Réglage du niveau d'écho 1

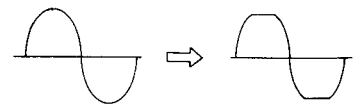

Fig. 12-3 Réglage du niveau d'écho 2

13. AJUSTE

Ajuste de la corriente devatiada

1. Dexconectar los altavoces, regular el control de volumen (MASTER) a su mínima posición, y dejar que el amplificador se caliente por unos 10 minutos despues de la puesta en ON.
2. Usando un voltímetro de CC, comprobar que el voltaje entre TP4 (+) y TP3 (-) (para el canal izq.) y el voltaje entre TP1 (+) y TP2 (-) (para el canal der.) están dentro del margen de 1,9mV y 54,5mV. Si el voltaje es inferior a 2,2mV, corte el correspondiente alambre conector (alambre conector L para el canal izq., y alambre conector R para el canal der).

Nota: Un voltaje mayor a 54,5mV indica posible falla del circuito, por lo que debe ser revisado.

Ajuste del nivel del eco

1. Quitar el panel delantero.
2. Regular el volumen ECHO LEVEL (VR303), y el volumen MIC1 (VR301) a la máxima posición.
3. Conectar un generador de audio a la toma MIC1 y un osciloscopio al terminal REC.
4. Aplicar una señal de onda sinusoidal de 1kHz, 20~30mV, a la toma MIC1.
5. Ajustar el VR307 para obtener fijación simétrica de la forma de onda en el terminal REC.

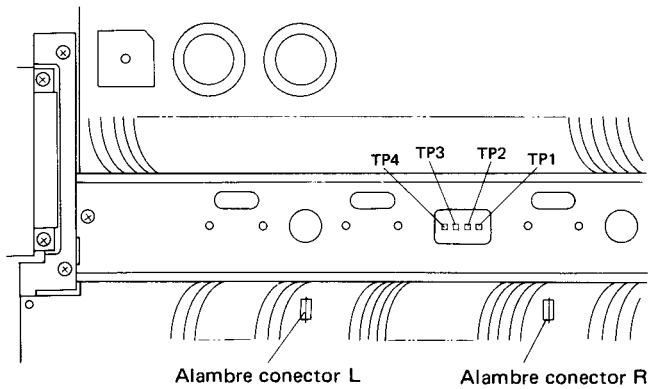

Fig. 12-1 Ajustes de la corriente devatiadá

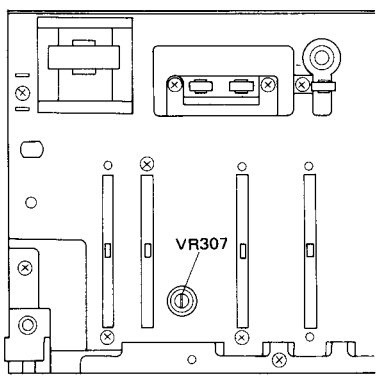

Fig. 12-2 Ajuste del nivel de eco 1

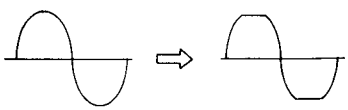

Fig. 12-3 Ajuste del nivel de echo 2

www.manualscenter.com

14. FOR HE, HB AND YP TYPES

Miscellaneous

- **SA-055/HE, HB and YP types are same as the KU type except for following sections.**

Mark	Symbol & Description	Part No.				Remark
		KU type	HE type	HB type	YP type	
	Fuse assembly	Non supply	Non supply	Non supply	Non supply	
⚠ ★	T1 Power transformer (120V)	ATS-110	.....	.....	.....	
	(220, 240V)	.....	ATS-131	ATS-131	ATS-131	
⚠★★	FU1 Fuse (5A)	AEK-308	.....	.....	.....	
⚠★★	FU1 Fuse (T2A)	.....	AEK-017	AEK-017	AEK-017	
⚠★★	FU2 Fuse (T2.5A)	.....	AEK-403	AEK-403	.....	
⚠	AC socket	AKP-501	AKP-502	AKP-505	.....	
⚠	AC power cord	ADG-073	ADG-041	ADG-051	ADG-043	
⚠	Strain relief	.....	AEC-327	AEC-327	AEC-327	
⚠★★	S1 Push switch (POWER)	ASG-541	ASG-541	ASG-541	ASG-541	
			(ASG-539)	(ASG-539)	(ASG-539)	
	Operation instructions					
	(English)	ARB-603	.....	ARB-603	ARB-603	
	(English, French, German, Italian)	.....	ARE-108	.....	.....	
	Packing case	AHE-329	AHE-386	AHE-329	AHE-329	

Fuse Assembly

- **Fuse assembly for HE, HB and YP is the same as the KU type except for following sections.**

Mark	Symbol & Description	Part No.				Remark
		KU type	HE type	HB type	YP type	
⚠	C520 (0.22/AC125V)	ACE-504	.....	.....	.....	
	(0.22/AC250V)	.....	ACE-505	ACE-505	ACE-505	

Power Supply Circuit for HE and HB Types

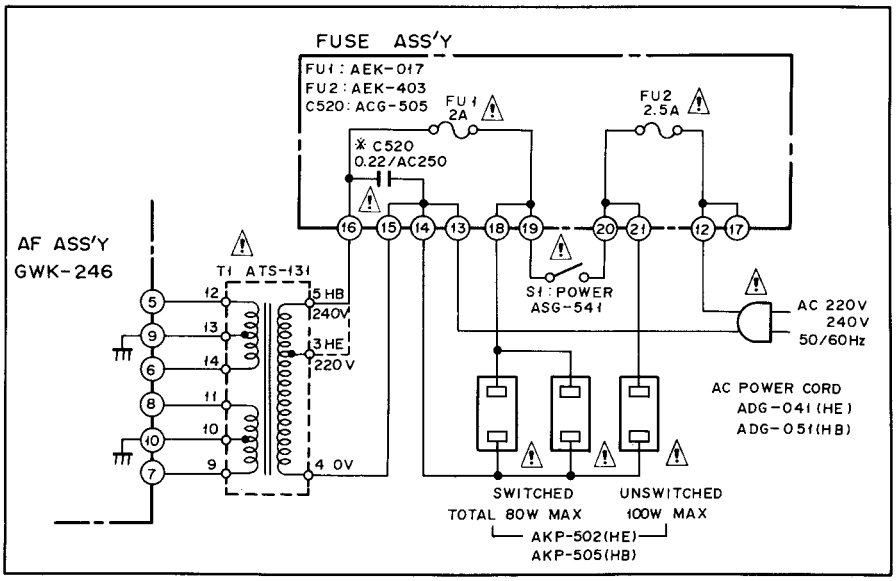

Power Supply Circuit for YP Type

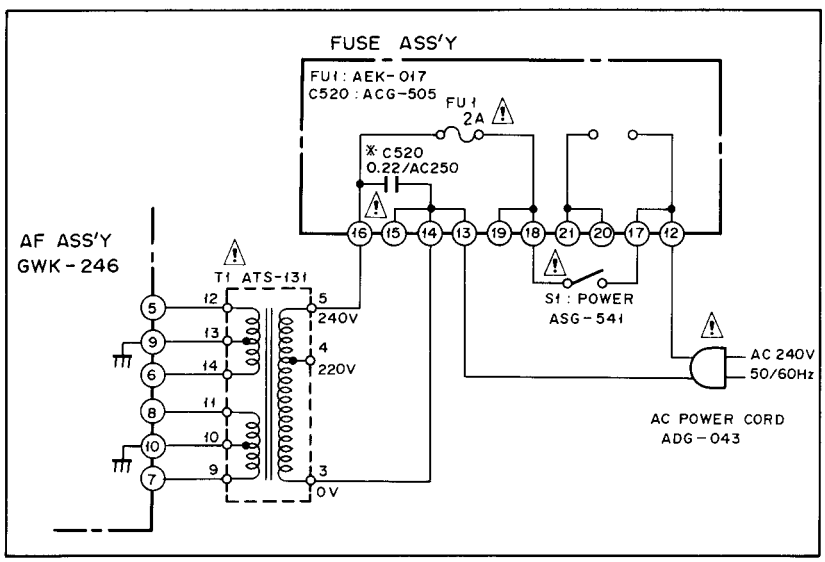

www.manualscenter.com

15. FOR S AND S/G TYPS

Miscellaneous

- **SA-055/S and S/G types are same as the KU type except for following sections.**

Mark	Symbol & Description	Part No.			Remark
		KU type	S/G type	S type	
	Fuse assembly	Non supply	Non supply	Non supply	
⚠ ★	T1 Power transformer (120V)	ATS-110	.....	.....	
	(110, 120, 220, 240V)	.....	ATS-130	ATS-130	
⚠ ★★	FU1 Fuse (5A)	AEK-308	.....	.....	
	(2.5A)	.....	AEK-123	AEK-123	
⚠ ★★	S2 Line voltage selector	.....	AKX-504	AKX-504	
⚠	AC power cord	ADG-073	ADG-060	ADG-060	
	Screw (3 x 10)	.....	VTZ30P100FZK	VTZ30P100FZK	Line voltage selector

Fuse Assembly

- **Fuse assembly for S and S/G type is the same as the KU type except for following sections.**

Mark	Symbol & Description	Part No.			Remark
		KU type	S/G type	S type	
⚠	C520 (0.22/AC125V)	ACE-504	.....	.....	
	(0.22/AC250V)	.....	ACE-505	ACE-505	
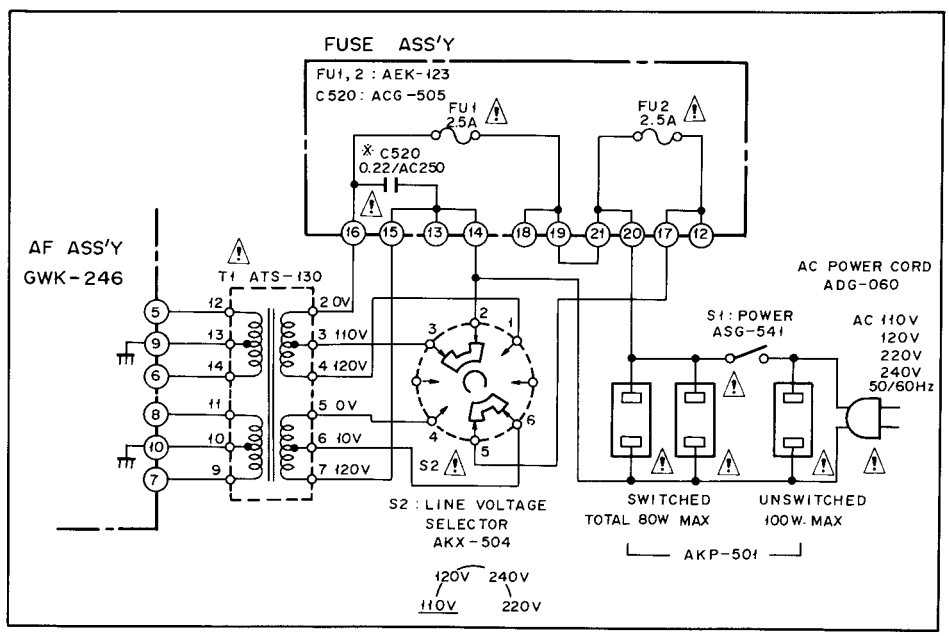
Power Supply Circuit for S and S/G Types