STR-VX30L

AEP Model

FM STEREO/FM-AM RECEIVER

SPECIFICATIONS

Amplifier section

Continuous RMS power output
(Less than 0.008% THD, both channels driven simultaneously)
At 20 Hz – 20 kHz
40 + 40 watts (8 ohms)
According to DIN 45500
40 + 40 watts (8 ohms)

Dynamic headroom 1.4 dB ('78 IHF)

Harmonic distortion Less than 0.008% at rated output

Intermodulation (IM) distortion
(60 Hz : 7 kHz = 4 : 1) Less than 0.008% at rated output

Frequency response PHONO : RIAA equalization curve ±0.5 dB
DAD/AUX, TAPE 1, 2: 10 Hz – 70 kHz $^{+0}_{-1}$ dB

Residual noise Less than 120 μV (8 ohms, network A)

Damping factor 35 (8 ohms, 1 kHz)

Inputs

	Sensitivity	Impedance	Maximum input capability (1 kHz)	S/N (weighting network, input level)
PHONO	2.5 mV	50 kΩ	150 mV	77 dB 75 dB* (A, 2.5 mV)
DAD/AUX TAPE 1, 2	150 mV	50 kΩ	—	100 dB 75 dB* (A, 150 mV)

* '78 IHF

Outputs
REC OUT 1, 2
Voltage 150 mV
Impedance 10 k ohms
SPEAKER A, B
Accepts speakers of 8 to 16 ohms.
HEADPHONES
Accepts low and high impedance headphones.

Tone controls
BASS
±8 dB at 100 Hz
TREBLE
±8 dB at 50 kHz

Loudness (att. 30 dB) + 8 dB at 100 Hz
+ 3 dB at 10 kHz

– Continued on page 2 –

SAFETY-RELATED COMPONENT WARNING!!

COMPONENTS IDENTIFIED BY SHADING AND MARK ⚠ ON THE SCHEMATIC DIAGRAMS, EXPLODED VIEWS AND IN THE PARTS LIST ARE CRITICAL TO SAFE OPERATION. REPLACE THESE COMPONENTS WITH SONY PARTS WHOSE PART NUMBERS APPEAR AS SHOWN IN THIS MANUAL OR IN SUPPLEMENTS PUBLISHED BY SONY.

SONY®
SERVICE MANUAL

FM tuner section

Tuning range 87.5 MHz - 108 MHz
Antenna terminal 75 ohms, unbalanced
Intermediate frequency
10.7 MHz
Sensitivity at 46 dB quieting (40 kHz deviation)
4.5 μV (mono)
45 μV (stereo)
Usable sensitivity 1.7 μV (S/N = 26 dB, 40 kHz deviation)
11.2 dBf, 2 μV (IHF)
Signal-to-noise ratio (40 kHz deviation)
74 dB (mono), 69 dB (stereo)
Harmonic distortion (40 kHz deviation)
0.15% (mono), 0.25% (stereo) at 1 kHz
IM distortion (40 kHz deviation)
0.15% (mono), 0.25% (stereo)
Separation 45 dB at 1 kHz
Frequency response 30 Hz - 15 kHz $^{+0.5}_{-2}$ dB
Selectivity 60 dB at 300 kHz
Capture ratio 1.0 dB
AM suppression ratio
54 dB
Image response ratio
80 dB
IF response ratio 90 dB
Spurious response ratio
70 dB
RF intermodulation 65 dB (IHF)
Auto-tuning threshold
Approx. 45 dBf

MW/LW tuner section

		MW	LW
Tuning range		522 kHz - 1,602 kHz	153 kHz - 344 kHz
Antenna	ferrite-bar antenna	provided	provided
	external antenna terminal	provided	provided
Intermediate frequency		450 kHz	450 kHz
Usable sensitivity	ferrite-bar antenna	300 μV/m (at 1,000 kHz)	500 μV/m (at 230 kHz)
	external antenna	100 μV (at 1,000 kHz)	100 μV (at 230 kHz)
Signal-to-noise ratio		54 dB	54 dB
Harmonic distortion		0.3%	0.3%
Selectivity		35 dB (9 kHz)	35 dB (9 kHz)

General

System
Tuner section: PLL quartz-locked digital synthesizer system
Preamplifier section: low-noise NF type equalizer amp.
Power amplifier section: pure-complementary SEPP
Power requirements 220 V ac, 50/60 Hz
Memory back-up power: 3 V dc, two batteries, IEC designation R6 (size AA)
Battery life: approx. 1 year with Sony SUM-3(NS) New Super Batteries
Power consumption 90 watts
AC outlets 2 switched total 100 watts
Dimensions Approx. 430 × 105 × 300 mm (w/h/d)
(17 × 4 1/4 × 11 7/8 inches)
including projecting parts and controls
Weight Approx. 6.7 kg (14 lbs 13 oz) net
Approx. 8 kg (17 lbs 11 oz) in shipping carton

TABLE OF CONTENTS

(page)
Specifications 1
Handling precautions for MOS ICs 4

SECTION 1 OUTLINE

Features 6
Precautions 6
Operating instructions
System connections 7
Location and function of controls 8
Battery installation 10
Preparation 10
Broadcast reception 11
Other operating instructions 13
Circuit description
IC301 (microcomputer) 14
Fluorescent indicator tube (FL Tube) 15
IC302 (CX778A) 18
Block diagram 19

SECTION 2 DISASSEMBLY

Removal 21

SECTION 3 ADJUSTMENTS

AM section 23
FM section 25

SECTION 4 DIAGRAMS

Schematic diagram
Tuner/Indicator section 29
Function Switch/Amplifier/Power Supply section 33
Mounting diagram 37
Semiconductor lead layouts 41

SECTION 5 EXPLODED VIEWS AND PARTS LIST

Exploded views 42
Parts list 45

Trouble checks 52

Handling Precautions for MOS ICs

Generally, the insulation resistance of the oxide layer in MOS IC structures is very high, and the oxide layer is very thin. Because of this, it is possible that the static voltages usually present on clothes and the human body will be enough to generate a potential difference across the insulator, high enough to cause a breakdown of the insulating layer.

The following precautions should be taken while handling these ICs.

(Particular care should be taken under conditions of low humidity.)

Precautions in Replacing MOS ICs

1. Store new ICs by inserting them into a urethane-polyester cushion (which is somewhat conductive), or wrapping it in aluminum foil, so that all the pins are at the same potential.
   (The ICs should be stored in that manner until mounted on the circuit board.)

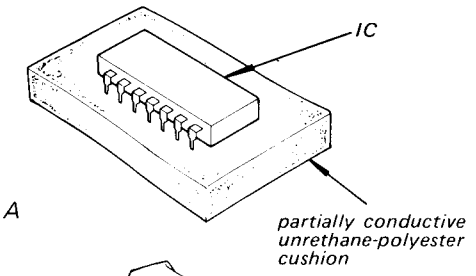

Fig. A

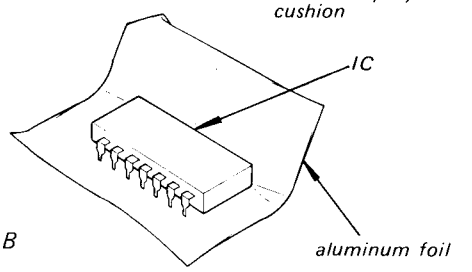

Fig. B

2. Check the soldering iron for possible power-line leakage current. Make sure that there is no leakage path by connecting an ohmmeter to the tip of the soldering iron and the plug as shown in Fig. C. If there is a leakage path, use some other soldering iron.

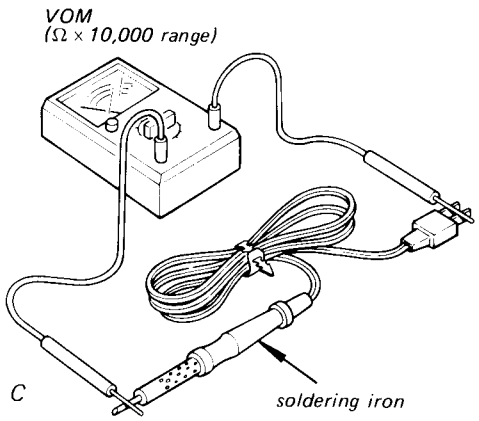

Fig. C

3. Equalize any potential difference between the clothes, the tools in use, the work bench, the set being worked on, and the packaged IC by touching them all in succession with the hands or a conductive wire or tool.
4. The following are effective methods for handling ICs that remove the potential difference across the oxide layer.
   - Use a paper clip modified by soldering in a wire braid insert.

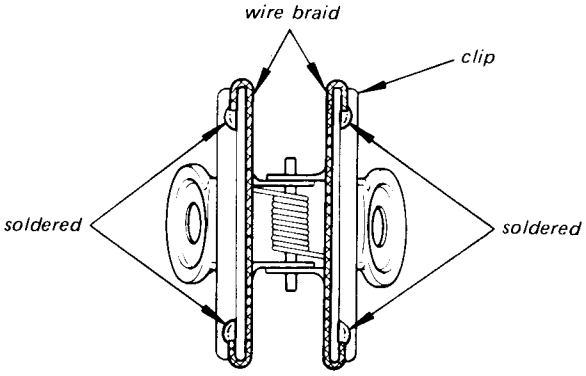

Fig. D Make sure that there is no solder on the inside.

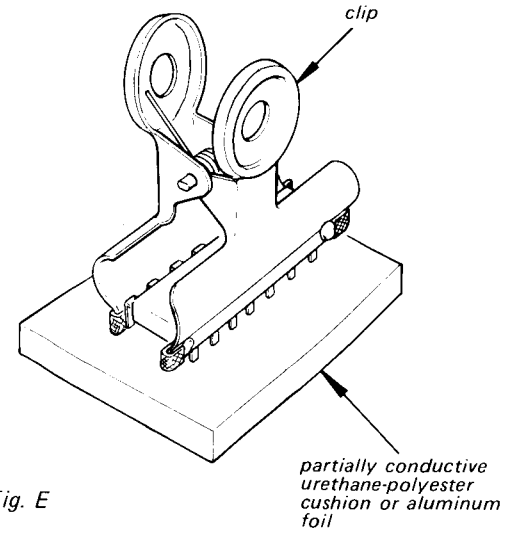

Fig. E

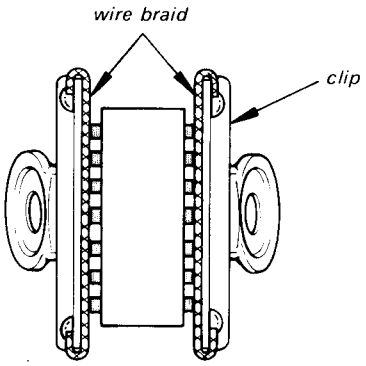

Fig. F Make sure that all the pins are in contact with the wire braid (all the pins will then be at the same potential.).

- Take a short length of fine bare wire and wind it around the IC so that it shorts all the pins of the IC, while it is still in the urethane-polyester cushion or aluminum foil. This ensures that all the pins are at the same potential.

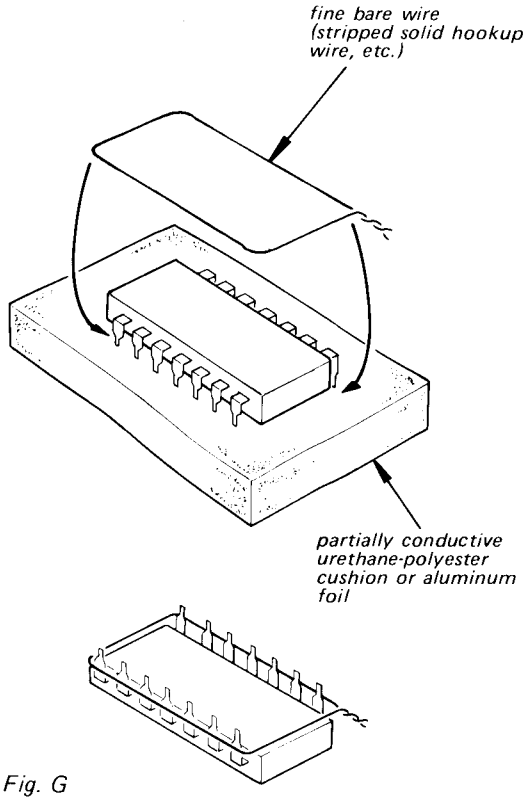

Fig. G

- When it is necessary to handle the IC with the fingers, do not touch any pin, and hold the IC at the ends of its plastic-package case as shown in Fig. H.

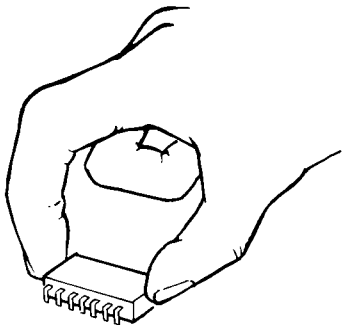

Fig. H

5. Method of Mounting
Insert the IC while holding it with the modified clip, and solder all the pins with the clip still shorting the pins. (Similarly, solder all the pins while the bare shorting wire is still wound around them.). Remove the clip or the bare shorting wire only after all the pins have been soldered.

Precaution while Checking C-MOS ICs

The C-MOS ICs (Complementary MOS) are MOS ICs that have their output sections made up of N-channel and P-channel push-pull stages to increase their speed of operation. If the output terminal of these ICs comes into contact with B+ or B– voltage, then the FET which is ON at that time will either become shorted or open.

This is valid for all the output sections that are connected together by the interconnections. Even the circuits that are physically separated (and not on the same board) can be destroyed simultaneously.

Example:

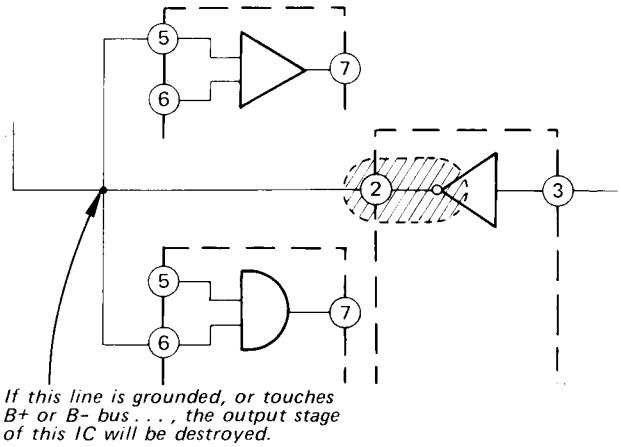

Fig. I

SECTION 1
OUTLINE

FEATURES

The STR-VX30L with its Direct Access System, makes station selection easier than ever. But the STR-VX30L also includes such features as memory presets, memory scan, function display, a Legato Linear amplifier and many other refinements which make it an outstanding control center for a total music system.

Amplifier section

●The operation of the power amplifier stage is stable without any observable distortion up through the higher frequencies.
We call this power amp "Legato Linear" because its switching distortion is very low and its output waveform smooth. The output stage of the Legato Linear power amp employs Hi-f_T transistors.
●Tone control stages, which employ an IC, are carefully designed to improve stereo separation and signal-to-noise ratio.
●Protection and power muting circuits are included to avoid annoying thump noise during power switching.

Tuner section

●The quartz-locked digital synthesizer system with a sophisticated Phase Locked Loop (PLL) circuit allows extremely precise tuning of FM and MW/LW stations with an electronic digital readout on the frequency display.
A new IC recently developed by Sony allows the high comparison frequency, thus eliminating the tendency for a low comparison frequency, which had been previously generally employed, to slip into the audio range and degrade the signal-to-noise ratio.
●Four methods of tuning are available :
Direct access tuning ; FM or MW/LW stations can be directly tuned in by inputting the station frequency with the DIRECT TUNING buttons.
Automatic tuning : the FM band is scanned automatically until a signal is received.
Manual tuning : MW/LW tuning can be accomplished either by changing the frequency display reading step by step or slowly to monitor the frequency.
Memory preset tuning : a desired pre-memorized station can be instantly received by pressing the PRESET TUNING button.
●The pre-memorized stations are retained in memory by two back-up batteries when the power is turned off. These back-up batteries also allow the last station tuned in to be held in memory.

PRECAUTIONS

On safety

●Operate the unit only on 220 V ac, 50/60 Hz.
●Should any liquid or solid object fall into the cabinet, unplug the unit and have it checked by qualified personnel before operating it any further.
●Unplug the unit from the wall outlet if it is not to be used for an extended period of time. To disconnect the cord, pull it out by grasping the plug. Never pull it out by the cord.

On installation

●Do not install the unit in a location near heat sources such as radiators or air ducts, or in a place subject to direct sunlight, excessive dust, mechanical vibration or shock.
●Good air circulation is essential to prevent internal heat build-up in the unit. Place the unit in the location with adequate air circulation. Do not place the unit on a soft surface, such as a rug that would block the ventilation holes on the bottom.
●Do not place anything on top of the cabinet. The top ventilation holes must be unobstructed for the proper operation of the unit and to prolong the life of its components.
●Do allow more than 15 cm (6 inches) of space behind the unit so that the position of the built-in ferrite-bar antenna can be adjusted.

On operation

●Before making program source connections, be sure to turn the power switch off and unplug the unit.
●Do not attempt to test the protection circuits by blocking the ventilation holes or connecting improper loads.
●When the unit is not used, turn the power off, to conserve energy and to extend the useful life of your unit.

On cleaning

Clean the cabinet, front and rear panels periodically with a soft dry cloth. If the stains are difficult to remove, use a cloth moistened with a mild detergent solution. Do not use solvents such as alcohol, benzine or thinner, since they will damage the finish.

On repacking

Do not throw away the carton and the packing material. It makes an ideal container to transport the unit in. When shipping the unit for repair work or to another location, repack it as illustrated on the carton box.

1-1. OPERATING INSTRUCTIONS

SYSTEM CONNECTIONS

CONNECTION NOTES

- The power cord should be connected last of all, first making sure that the POWER switch is turned off.
- To assure correct matching at the input and output terminals of your audio system, refer to the "SPECIFICATIONS" on page 16, and to the specifications given in the instruction manuals provided with the components you wish to connect to the receiver. Generally the output level of a signal source (phono cartridge, tape recorder, etc.) should be equal to or slightly greater than the sensitivity of the corresponding input. Also the output impedance of a signal source should be considerably lower than the impedance of the corresponding input.
- For all program source input and output connections, use a low-capacitance type shielded cable. Keep the cables as short as practicable. Excessively long runs tend to reduce the high frequency response. Also, keep the cables away from the power cord or speaker cords to avoid hum pickup.
- When connecting program sources or tape recorders, note that the red jacks of the receiver are for right-channel connections and the white jacks for left-channel connections.

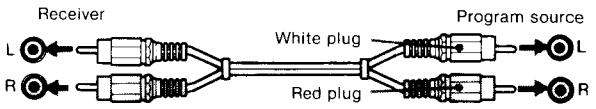

- The cable connectors should be fully inserted into the jacks. A loose connection may cause hum and noise.
- Since there is a variety of cords—such as speaker cords, power cord, connecting cords—around the rear panel terminals, you should maintain a moderate separation between the bar antenna and the cords. This is because the receiver may produce a noise from the direct touch of the cords on the bar antenna.

CONNECTION DIAGRAM

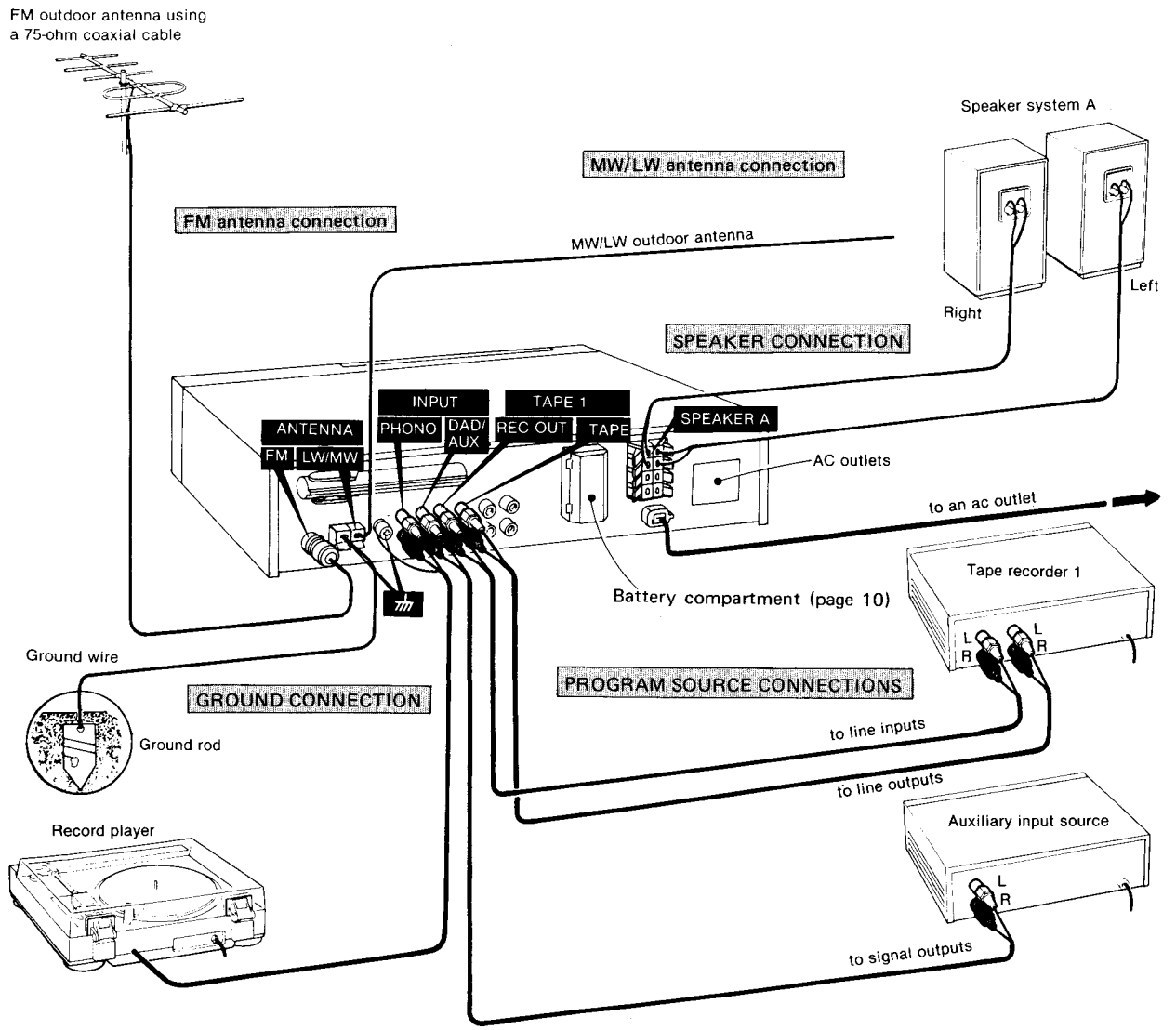

LOCATION AND FUNCTION OF CONTROLS

Before plugging in or attempting to operate this receiver,
it is suggested that you familiarize yourself with all its switches and the purpose of each.
Each number in the photo is keyed to the descriptive text.

Amplifier section

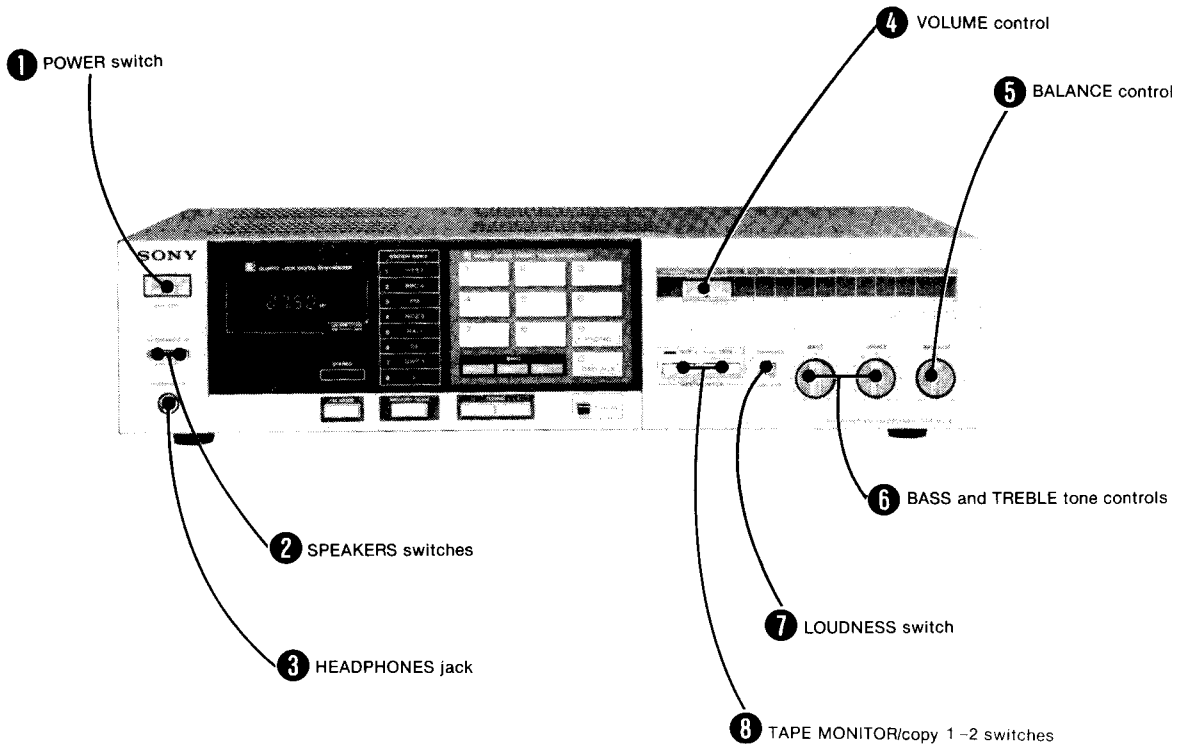

❶ POWER switch
Depress to turn on the power. To turn the power off, press the switch again.

❷ SPEAKERS switches
To drive speaker system A, depress the A switch.
To drive speaker system B, depress the B switch.
To drive both speaker systems A and B, depress both A and B switches.

❸ HEADPHONES jack
Accepts any low or high impedance stereo headphones.
For headphone monitoring only, keep the SPEAKERS switches OFF.

❹ VOLUME control
Regulates the overall sound level.
Sliding the lever to the right increases the volume and sliding it to the left decreases the volume. Be sure to lower the volume whenever you turn the receiver on or off or make system connections.

❺ BALANCE control
Governs the amount of sound coming from each paired speaker to get optimum stereo effect. When you turn the BALANCE control to the right, the left channel volume is decreased, and vice versa.

❻ BASS and TREBLE tone controls
These knobs control the prominence of bass and treble response. Clockwise rotation increases response; counterclockwise rotation decreases it. Normally keep these at the "0" position.
Adjust the tone to the acoustic condition of the listening room or to your preference.

❼ LOUDNESS switch
Normally keep the switch released (⊔ OFF). When listening to program sources at a low VOLUME control setting, depress the switch (⊔ ON).
This loudness control compensates for the human ear's decreased response to very low and high frequency sound at low volume levels, and provides an apparently uniform response. The effect of this control gradually decreases as the volume is increased by the VOLUME control.

❽ TAPE MONITOR/copy 1 → 2 switches
To listen to a taped program, depress the TAPE 1 or TAPE 2 switch. The indication—TAPE 1 or TAPE 2 above the switches—will light up, indicating that a playback output from the tape recorder connected to the TAPE 1 or TAPE 2 jacks can be heard.
To dub from tape recorder 1 to tape recorder 2, depress the TAPE 1 (COPY 1 → 2) switch.

Tuner section

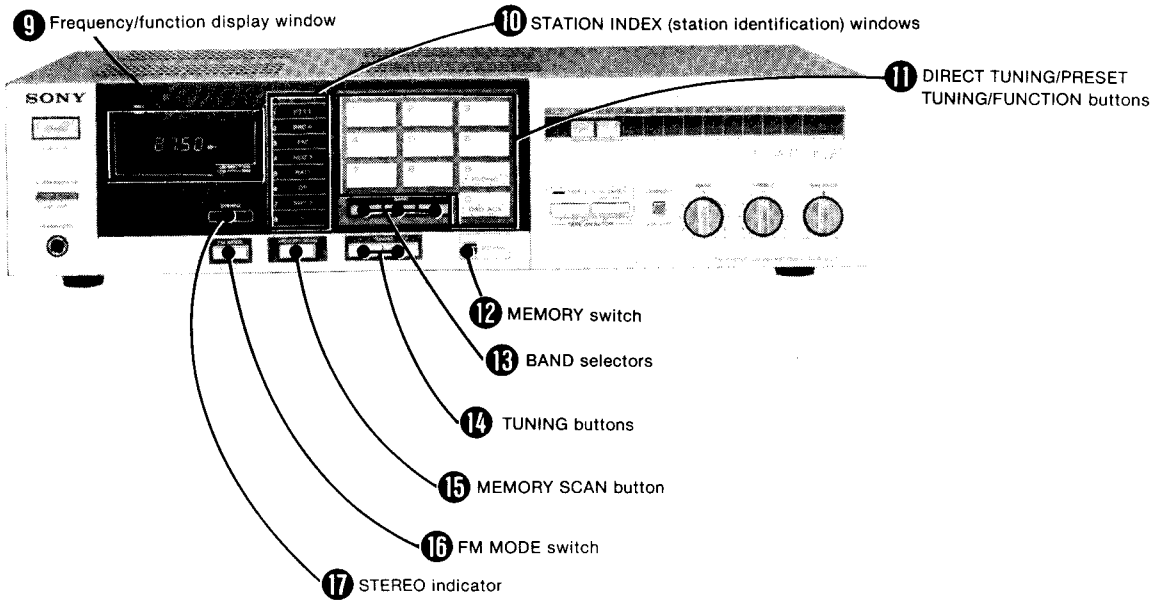

❾ Frequency/function display window

During broadcast reception

Frequency being received

The PRESET TUNING button at which the frequency is memorized.

During reproduction of record source or auxiliary input source.

Program in use

❿ STATION INDEX (station identification) windows
Station labels (supplied) identifying pre-memorized stations can be placed in these windows.

⓫ DIRECT TUNING/PRESET TUNING/FUNCTION buttons
Press the buttons according to the following desired purposes.
The pressed figures will be displayed on the frequency/function display window.
For direct access tuning
(the 1 to 0 buttons serve as DIRECT TUNING buttons)
To tune in the frequency directly, press the BAND selector and the buttons.
For memory preset tuning
(the 1 to 8 buttons serve as PRESET TUNING buttons)
To call up a prememorized station, press the appropriate button.
For reproduction of record and auxiliary sources
(the 9 and 0 buttons serve as FUNCTION buttons)
Press to select between PHONO(9) or DAD/AUX(0).

⓬ MEMORY switch
Press to operate memory circuit. The MEMORY indicator will appear on the band/frequency-display window for a few seconds indicating that the memory circuit is standing by.

⓭ Band selectors
Depress the appropriate selector to select the desired band: FM, MW, or LW.

⓮ TUNING buttons
Press either the "+" or "–" button to change the frequency: Press the "–" button to go to a lower frequency and the "+" button to go to a higher.
During FM reception:
Press to start the automatic frequency scanning (in 0.05 MHz steps).
During MW/LW reception:
Press and keep the button depressed to change the frequency continuously. To change the frequency rapidly, press and release the button immediately.

⓯ MEMORY SCAN button
Press for automatic scanning of the stations pre-memorized on the PRESET TUNING buttons.

⓰ FM MODE switch
During FM reception, when a stereo signal of sufficient strength is received, the receiver operates in the stereo mode. (The STEREO indicator will illuminate.)
When you want to tune in a very weak FM station, or when an FM program is too noisy, press this switch. (The STEREO indicator illumination will go out.) Press it again to return to the stereo mode. The mode will automatically return to the stereo mode when the frequency is changed.

⓱ STEREO indicator
This indicator will light when an FM stereo program of sufficient signal strength is tuned in with the FM MODE switch engaged.

BATTERY INSTALLATION

To retain the frequencies memorized on the PRESET TUNING buttons while the receiver is turned off, install two batteries in the battery compartment at the rear as follows.

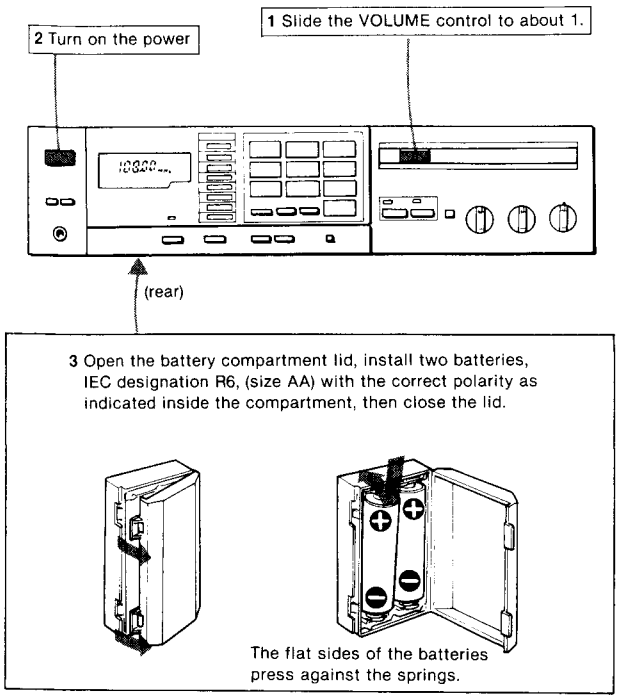

Battery life
About one year of operation can be expected when using Sony SUM-3(NS) New Super Batteries (or Eveready Heavy Duty Batteries No. 1215). Besure to replace the batteries once a year to avoid damage from leaking batteries.

Note
Be sure to turn on the receiver before installing or replacing the batteries.
If the batteries are installed or replaced with the power turned off, incorrect figures will appear in the function/frequency display and you are not able to turne in the desired station.
In that case:
❶ Leave the unit with power off for 30 minutes.
❷ Turn on the power.
❸ Install the two batteries.
❹ Place the desired frequencies in memory again.

PREPARATION

Before proceeding to any type of operation, set the controls and switches as shown.

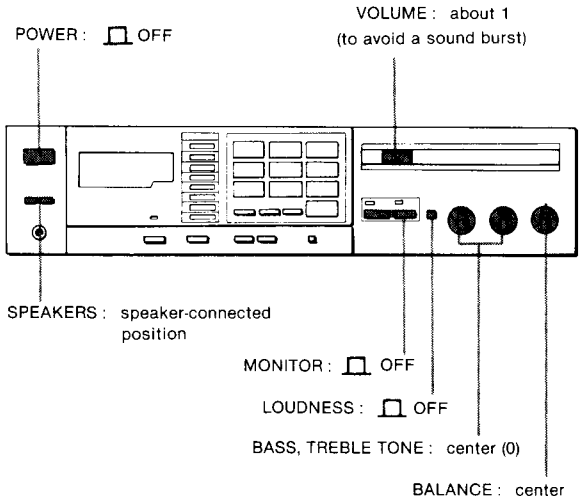

BROADCAST RECEPTION

This receiver incorporates the following tuning systems which give the listener a choice of 4 ways in which to tune in the desired broadcast.

Direct access tuning	If you know the frequency of the station to be received, you can tune in the station easily by this system.
Auto tuning (for FM reception) Manual tuning (for MW/LW receiption)	These systems are convenient for receiving a station whose frequency has not been memorized, or to see what kind of programs are on the air.
Memory preset tuning	Once you program the frequencies into the memory, all you need to the tune in a station is to press the appropriate button.

DIRECT ACCESS TUNING

Follow the numbered sequence.

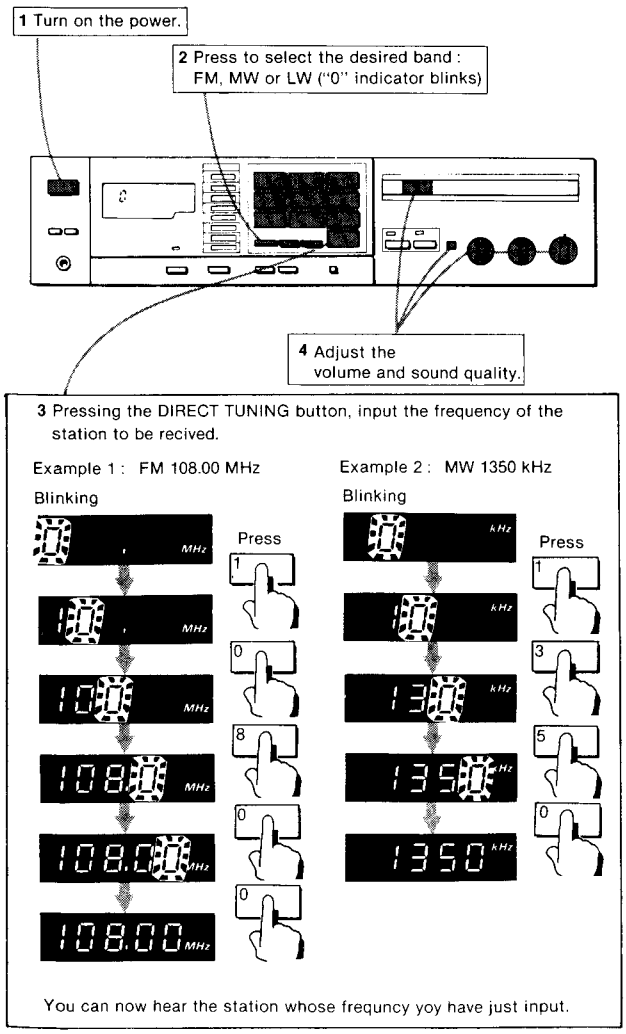

When the wrong frequency is input

- If you mistakenly press a wrong figure, press the appropriate BAND selector again and input the correct frequency.
- If you input a frequency outside the reciver's frequency range (FM : 87.5 to 108 MHz, MW : 522 to 1602 kHz, LW : 153 to 344 kHz), the figures will flash on and off in the frequency/function display. In this case, press the appropriate BAND selector and input the proper frequency.

Notes on the MW direct access tuning

The last digit of the MW station frequency is always displayed according to the set AM frequency allocation system (intervals of 9 kHz). For example, even if you press the DIRECT TUNING buttons 1, 3, 6, 7, "1368 kHz" will be displayed in the frequency/function display window.

AUTOMATIC TUNING (for FM reception)

Follow the numbered sequence.

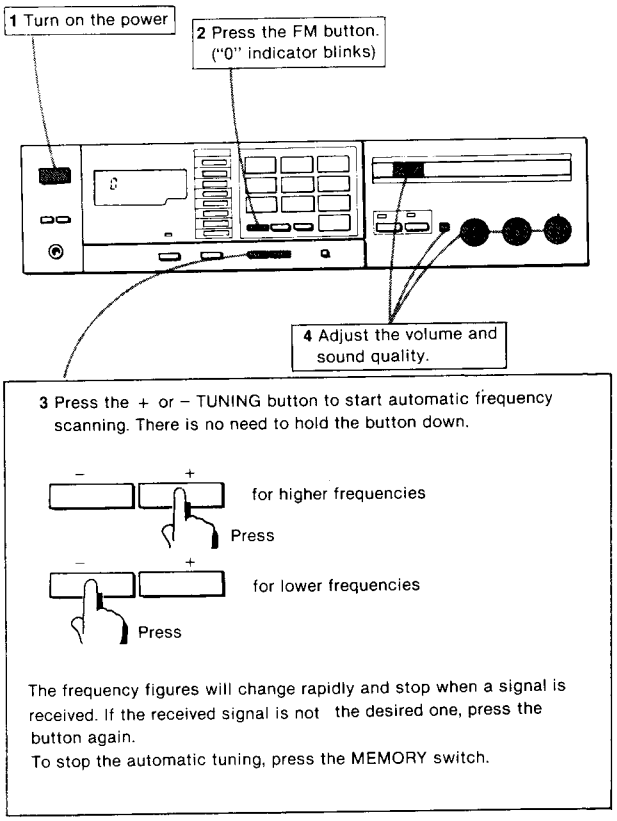

If the signal strength is weak, the frequency display figures will not stop at the desired frequency. When this happens, adjust the antenna for optimum reception. If the signal strength is still too weak for automatic tuning, tune in the station as described in "DIRECT ACCESS TUNING".

When the frequency figures reach the end of the tuning range of each band, the frequency will then be scanned from the opposite end of the tuning range.

MANUAL TUNING (for MW/LW reception)
Follow the numbered sequence.

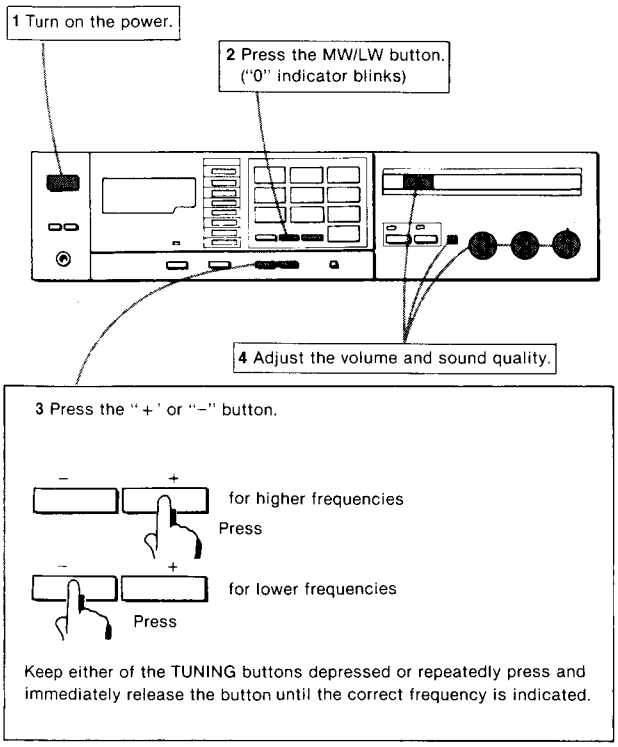

To quickly tune in a roughly known frequency
You can quickly tune in a FM, MW or LW station whose frequency is roughly known by combining the TUNING button operation with direct access tuning. Input the approximate frequency with the direct access tuning, then press either the "+" or "–" button. For example, if you believe your station is between 700 and 800 kHz, input 7 and press the "+" button, or input 8 and press the "–" button.

MEMORY PRESET TUNING
A total eight FM or MW/LW stations or a combination of both can be preset in any sequence.

To memorize station frequencies
To memorize a station, first tune in the station then follow the numbered sequence.

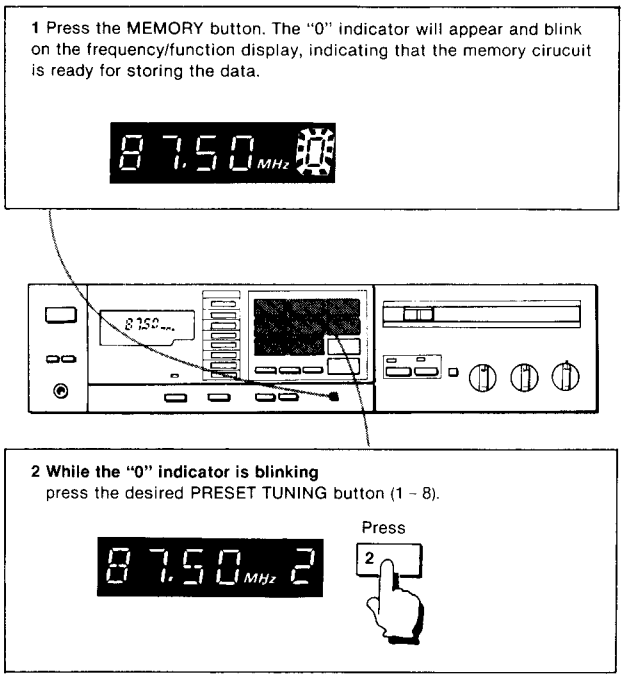

Repeat these steps for each button.
Replace the station labels to conform to the selected pre-memorized stations.

Notes
- The "0" indicator will go off automatically after a few seconds. When the indicator is out, the memory circuit does not operate to memorize the station.
- The previous memory will be erased when a new frequency is programmed in to the memory of the same button. An erasure cannot be made without a new input.

To receive a pre-memorized station
Turn the POWER switch on and simply press the desired PRESET TUNING button.

Memory of the last received station
This tuner includes a memory circuit to remember the station which had been received for more than one second just before the power was turned off. This station will be automatically tuned in when the power is turned on again.
This memory system enables you to make a timer-activated recording from the tuner.

Note
If the power is turned off during memory scanning, even if a station had been received for three seconds, this memory circuit will not operate.

STATION LABEL INSERTION

Station labels are supplied for identification of the preset stations. Affix the labels as follows :

❶ Pull out the station identification plate from the cutout with a coin or similar object.

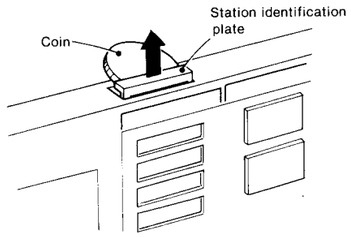

❷ Pick out the appropriate tables for the pre-memorized station and affix them to the plate as shown, in the correct order.

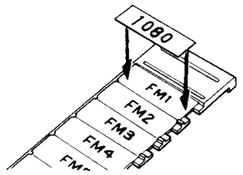

❸ Replace the plate.
Check that the station labels match the pre-memorized stations by tuning in to each station.

OTHER OPERATING INSTRUCTION

REPRODUCTION OF PHONO, DAD/AUX AND TAPE PROGRAM SOURCES

Once you familiarize yourself with the operation of FM/MW/LW reception, you can listen to other program souces as follows :

❶ Set the control and switches at the initial setting position.

❷ Turn on the power and select the desired program source as required by using the TAPE MONITOR and FUNCITION switches.

Program	TAPE MONITOR switches	FUNCTION switches
Record playing	All switches released	Press PHONO (9).
Auxiliary source		Press DAD/AUX (0).
Taped program	Depress either TAPE 1 or TAPE 2.	Any

❸ Play the program source.
❹ Ajust the sound quality to your preference.

> The TAPE 2 switch has priority over the TAPE 1 switch and the FUNCTION switches (PHONO and DAD/AUX) if they are engaged at the same time.
> The TAPE 1 switch has priority over the FUNCTION switches. If the TAPE 2 or TAPE 1 switch is depressed, you cannot listen to the program source selected by the FUNCTION switches.

TAPE RECORDING

❶ Select the program to be recorded with the FUNCITION switches.
❷ Release the TAPE 1 and TAPE 2 switches.
❸ Adjust the recording level.
❹ Start recording.

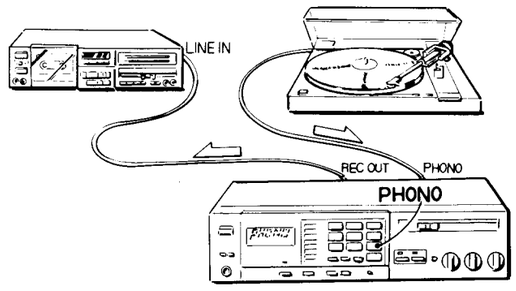

Note : The VOLUME, BASS, TREBLE and BALANCE controls and the LOUDNESS switch have no effect upon the recording.

Monitoring of a 3-head tape recorder

If your tape recorder has separate record and playback heads, you can monitor the recording results.
When the tape recorder used for recording is connected to the REC OUT 1 jacks, depress the TAPE 1 switch and you can monitor the recording results. To disengage the tape monitor function, press the TAPE 1 switch again, and the source sound will be heard. Be sure to keep the monitor switch of the tape recorder in the TAPE position.

1-4. CIRCUIT DESCRIPTION

IC301 (Microcomputer)

IC301 (TCP4621BP-6502) is a microcomputer IC. The terminal functions are as follows:
Main Functions:
- Key input detection
- Fluorescent indicator tube (FIP301) indication output
- Data transmission to PLL OSC SYNTHESIZER IC (IC302: CX778A) (16 bit serial data)
- Control of function switch IC (IC502: CX770A) control signal

IC301 Terminal Functions

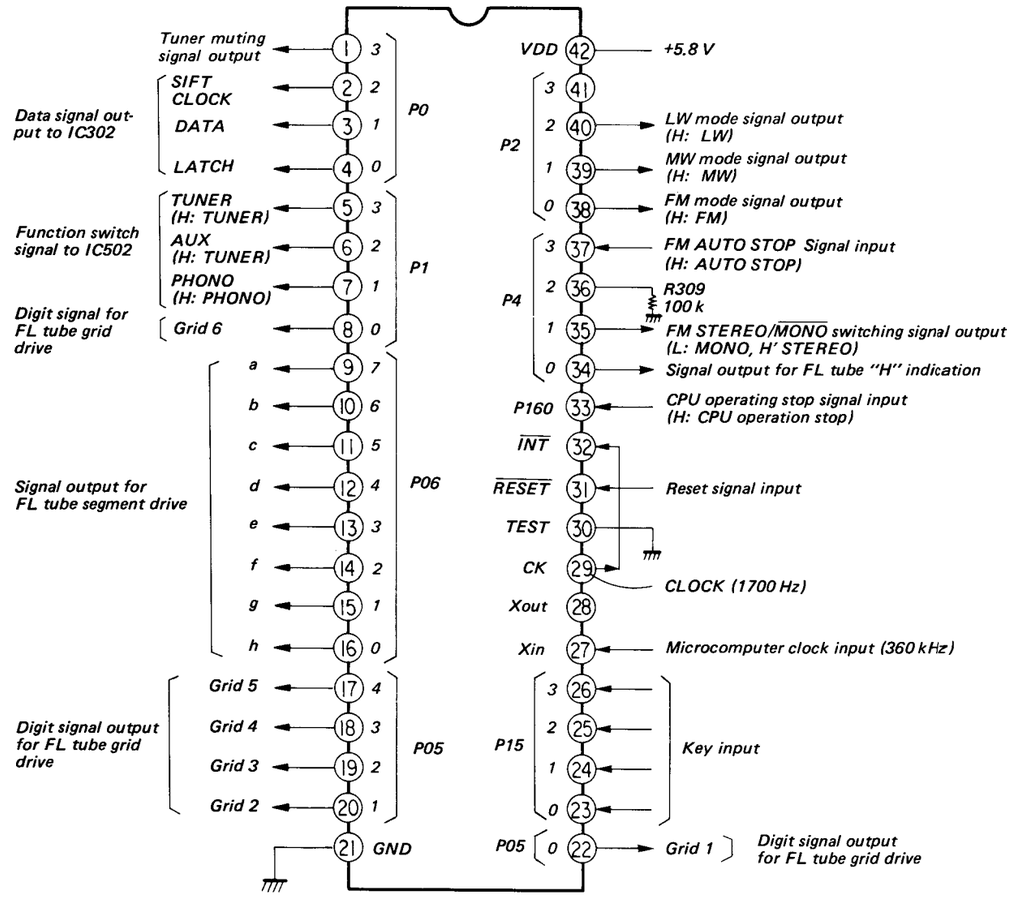

Fig. 1

FL tube - - - Fluorescent Indicator Tube

Fluorescent Indicator Tube (FL Tube)

The FL tube performs indication of frequency received and function. The indication is done by the segment drive signal (see Fig. 2) and grid drive signal (see Fig. 3) output from IC301 (microcomputer).
The indication method is as follows. The grid is turned on in order (G1 – G6), by time sharing, by the grid drive signal, and the a-h segment drive is sent out in conjunction with this.
For the "H" indication during "PHONO" indication, considering the "H" portion only, the "A" indication segment drive signal is output from IC301, and a high pulse is output from IC301 pin (34), timed with 'a' segment drive, and applied to Q304 base. Therefore, Q304 goes off and 'a' segment does not light up, but becomes "H" indication.
(see Fig. 2)

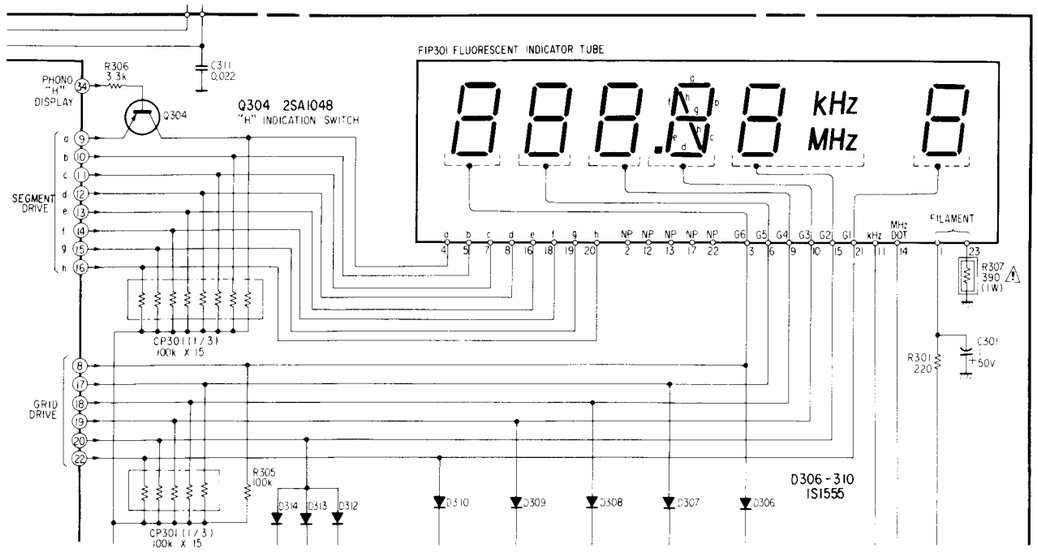

Fig. 2

"H" Indication during "PHONO" Indication and Segment Waveforms for "PHONO" Indication

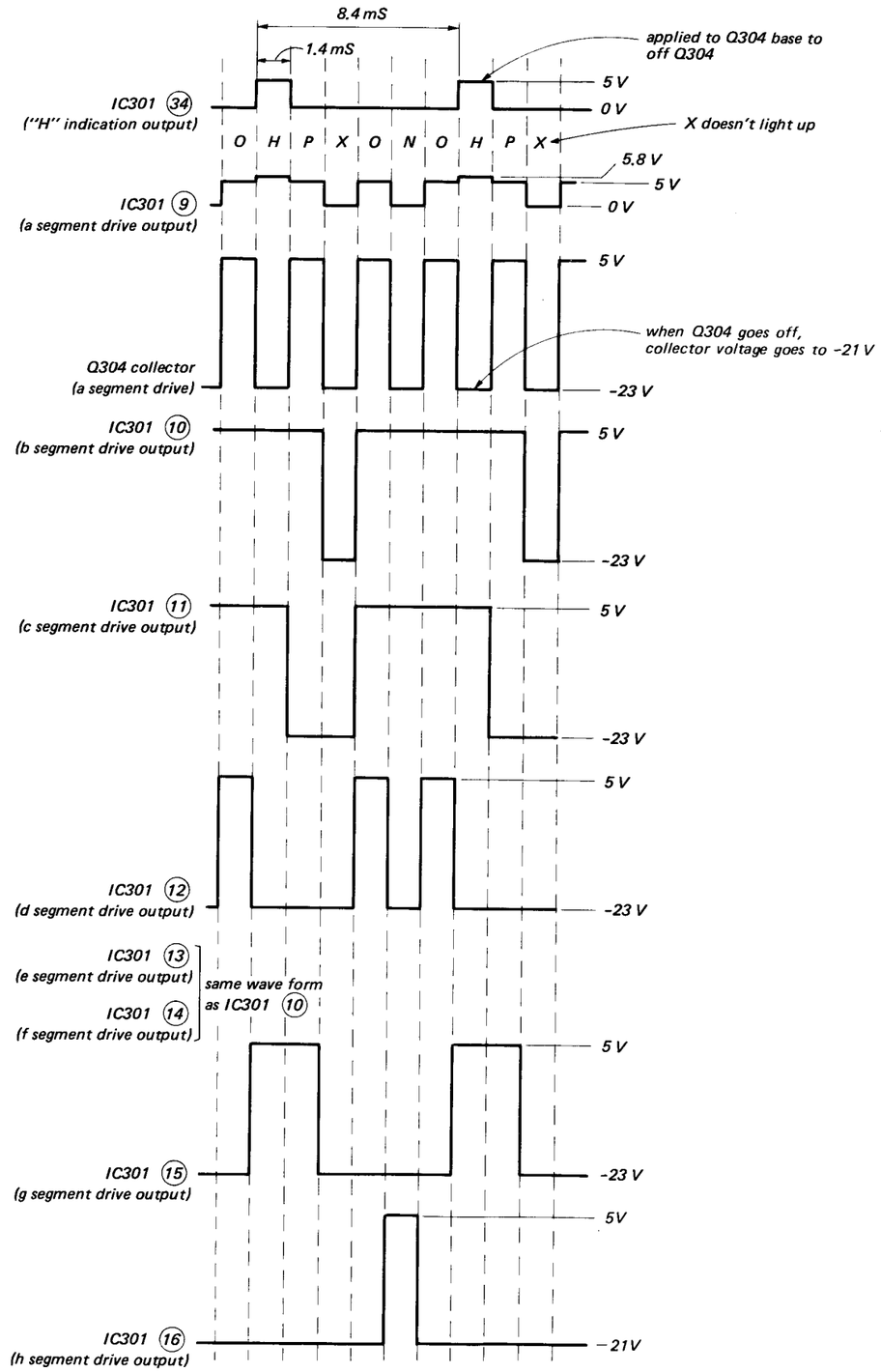

Fig. 3

Grid Drive Signal

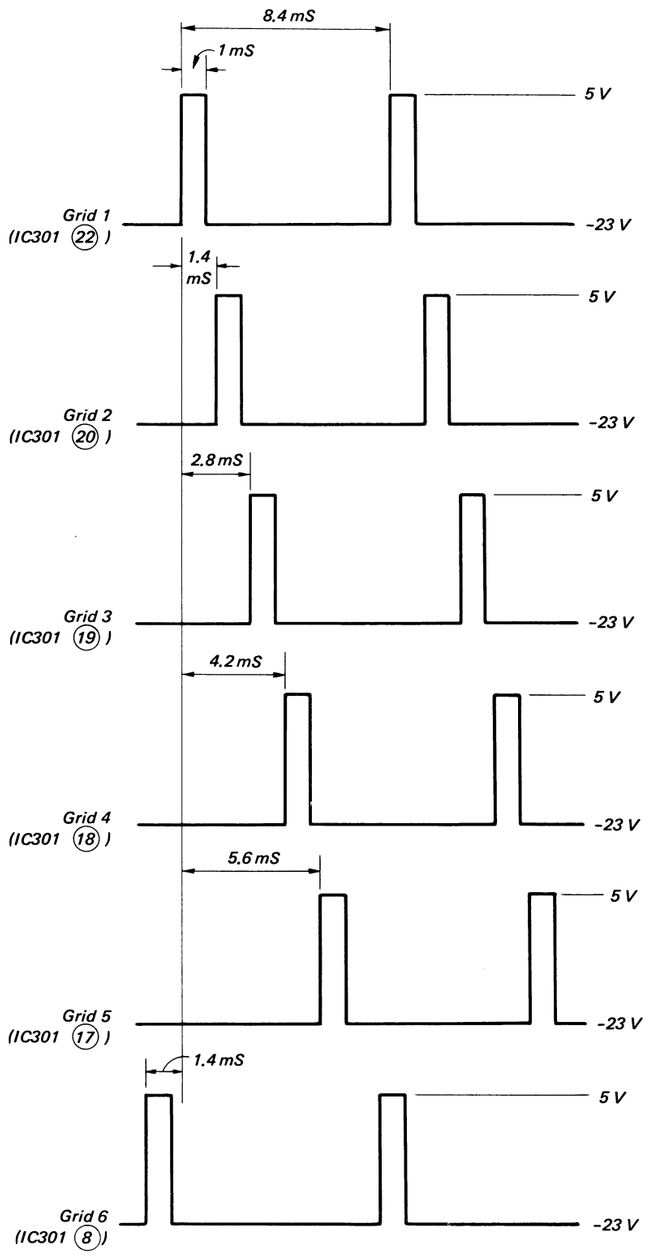

Fig. 4

IC302 (CX778A)

IC302 is the PLL synthesizer to control local oscillator frequency by comparing it with reference frequency. As the local oscillator output is directly (without any additional prescaler) supplied to the programmable counter section, reference frequency is as high as the channel spacing frequency. The benefits owing to this are the stable and almost ripple-less local oscillation and reduced spurious radiation.

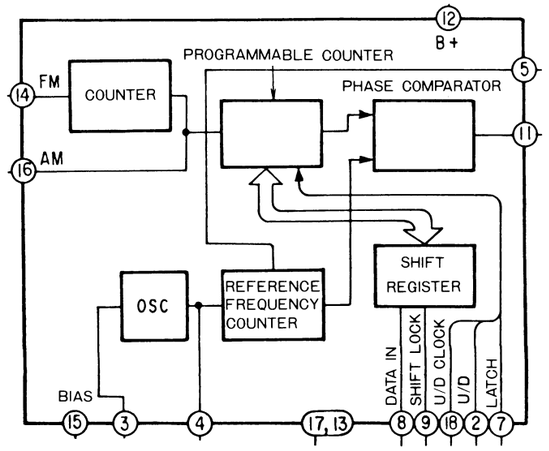

As shown above, the programmable counter for changing frequency gets the data through the shift register.

Function of Terminals

Pin No.	Mark	Function
1	Data Check	not used in this set
2	U/D	input terminal for selecting mode of built-in UP/DOWN counter HIGH level: UP mode LOW level: DOWN mode
3, 4	X_1, X_0	terminal for connecting crystal oscillator (7.2MHz)
5	Sys CLK	output terminal for system clock in phase comparator 360kHz
6	Fref	output terminal for reference frequency
7	Latch	input terminal for signal to let the shift register latch the data Data is latched at HIGH level
8	Data IN	input terminal for data
9	Shift CLK	input terminal for clock to let data input in 16-bit serial manner
10,11	PD	output terminal for phase comparator (tristate)
12	V_{DD}	power supply (+5V)
14	FM IN	input terminal for signal from FM local oscillator
15	Sub	substrate
16	AM/IN	input terminal for signal from AM local oscillator
17	GND	ground
18	U/D CLK	input terminal for UP/DOWN clock of UP/DOWN counter

Data Input Procedure from Microcomputer:

- Setting of division ratio

Data for setting division ratio of the programmable counter, comparison frequency and the pin for input are input by 16-bit serial manner by using terminals DATA IN, SHIFT CLOCK and LATCH. The first 12 bits (D_0 – D_{11}) of this 16-bit data works for setting division ratio of the programmable counter and the last 4 bits (C_0 – C_3) works for controlling comparison frequency. Timing chart when data are input is as follows.

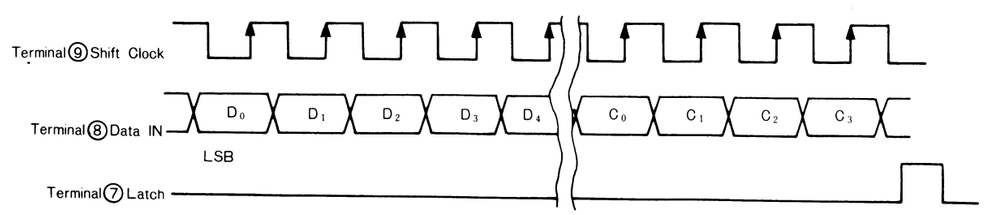

1-3. BLOCK DIAGRAM

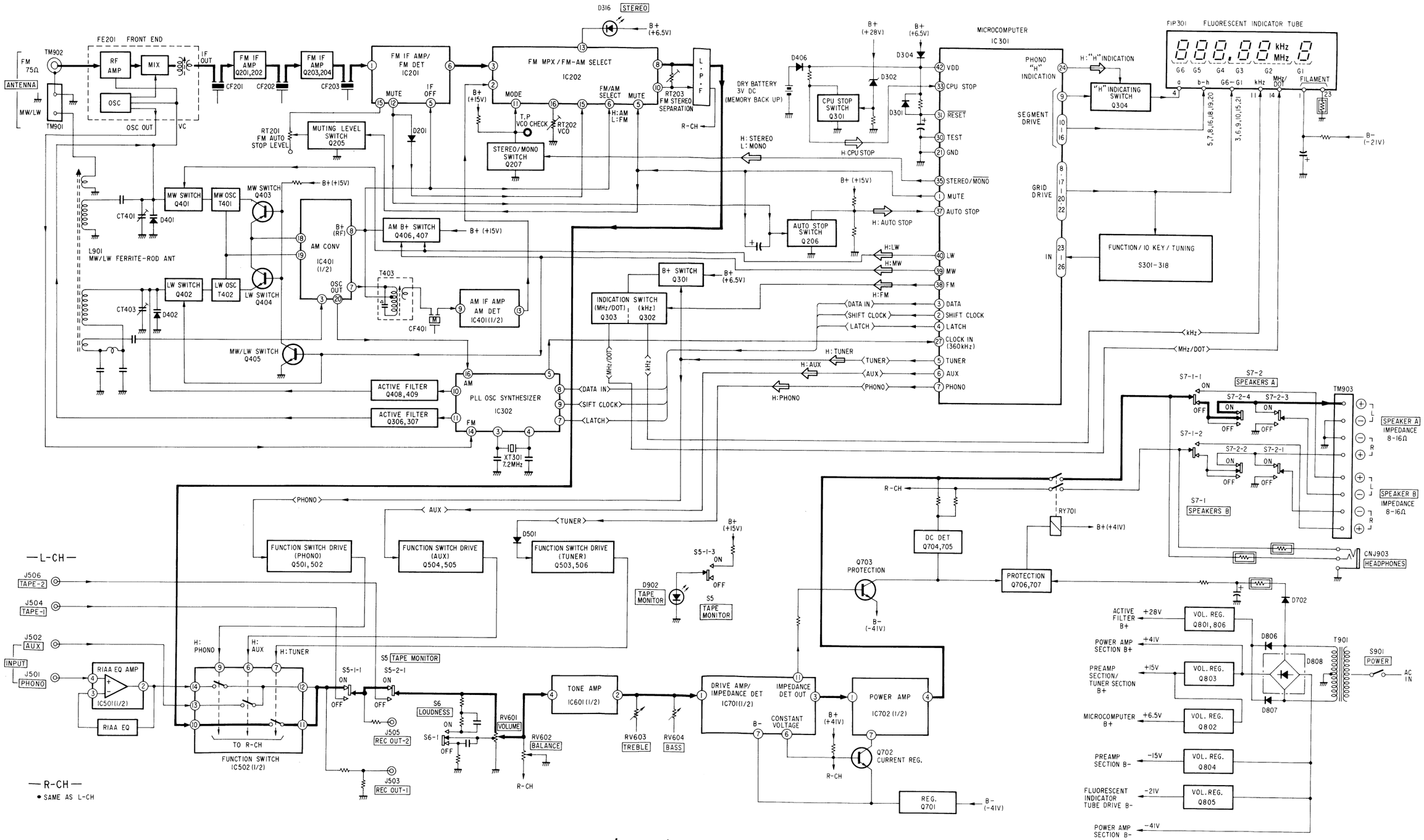

SECTION 2
DISASSEMBLY

2-1. REMOVAL

Note: Follow the disassembly procedure in the numerical order given.

Top Cover

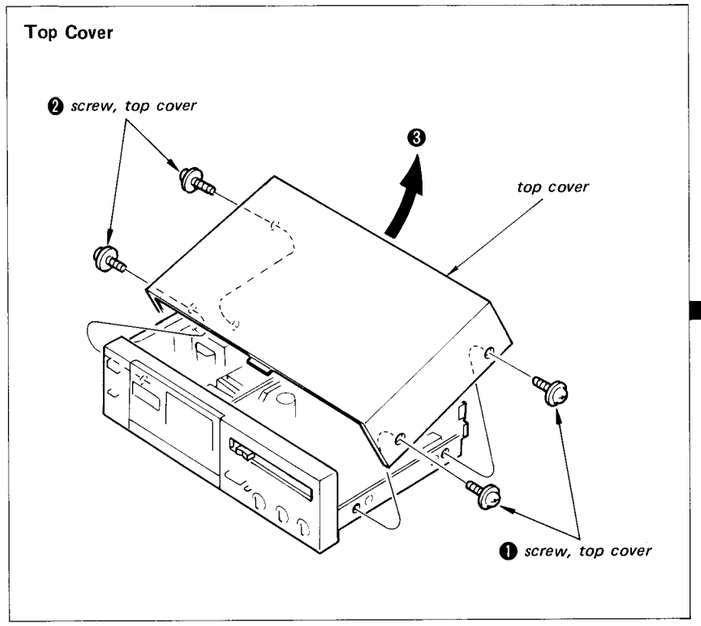

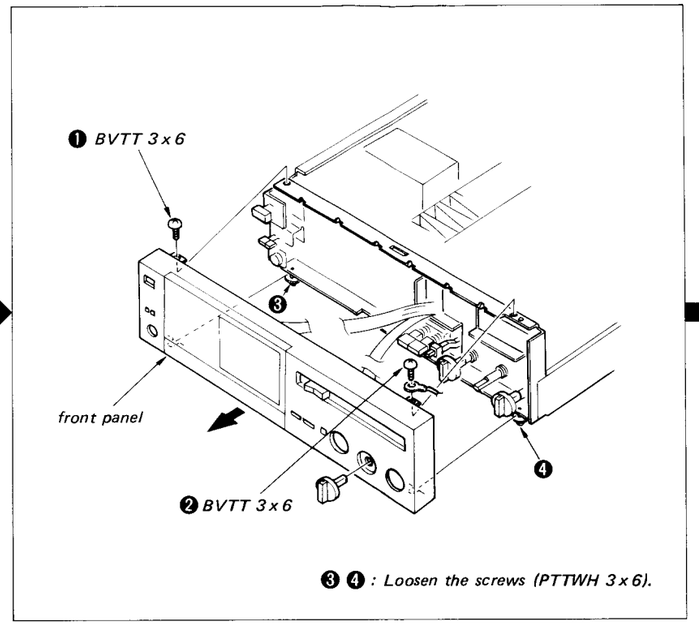

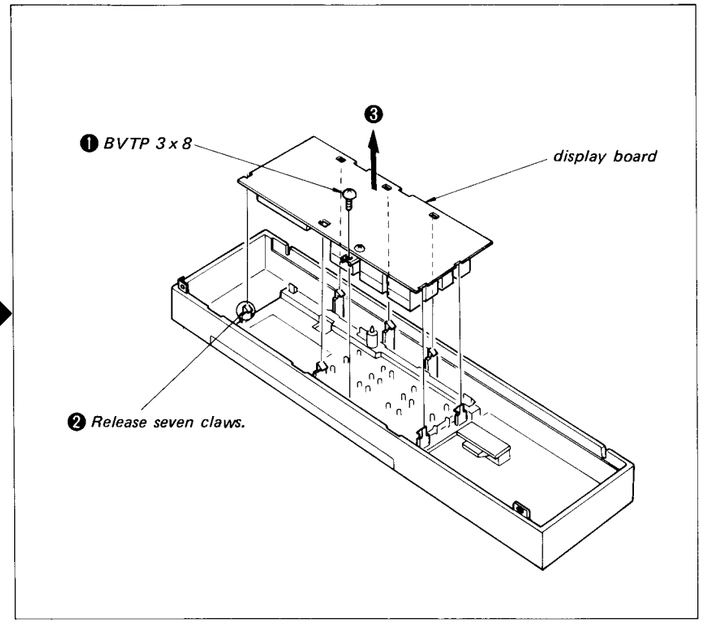

Bottom Plate

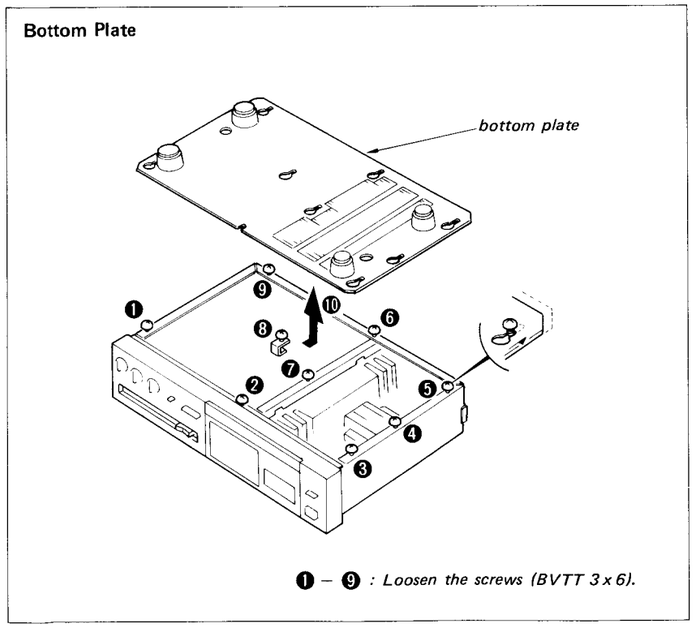

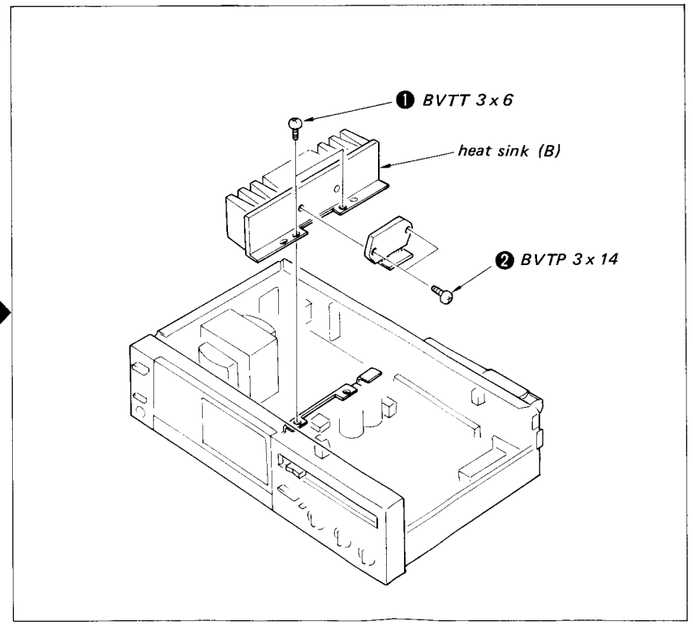

SECTION 3
ADJUSTMENTS

AM SECTION

- Repeat the procedures in each adjustment several times, and the frequency coverage and tracking adjustments should be finally done by the trimmer capacitors.

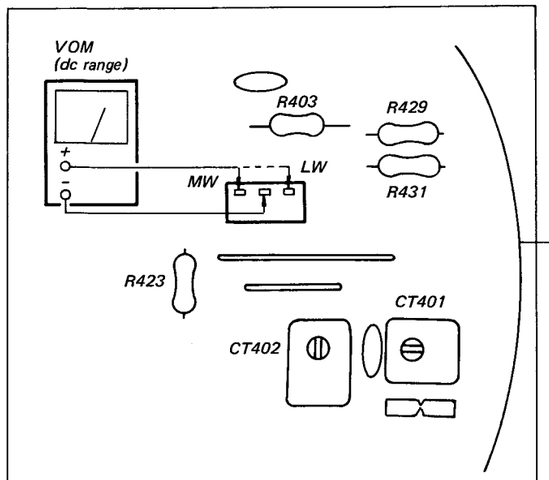

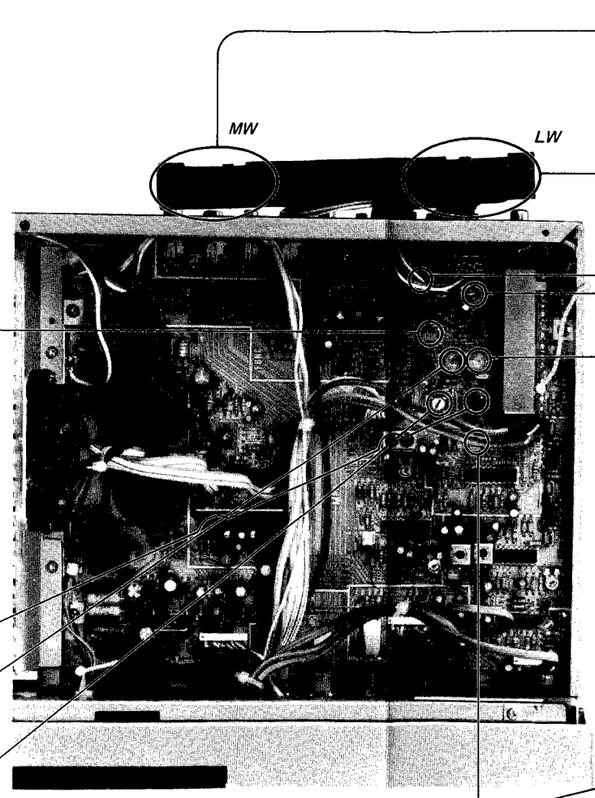

CV CHECK

T401

CT402

T402

CT404

L901

L901

CT401

CT403

MW FREQUENCY COVERAGE ADJUSTMENT		
frequency display in set	530 kHz (9 kHz step)	1,610 kHz (9 kHz step)
Voltage at test point (CV CHECK)	1.5 V	22 V
Adjustment part	T401	CT402

LW FREQUENCY COVERAGE ADJUSTMENT		
frequency display in set	155 kHz (1 kHz step)	344 kHz (1 kHz step)
Voltage at est point (CV CHECK)	2.3 V	18.5 V
Adjustment part	T402	CT404

T403
450 kHz
Adjust for a maximum reading on VOM.
AM IF ALIGNMENT

AM TRACKING ADJUSTMENT

Setting:

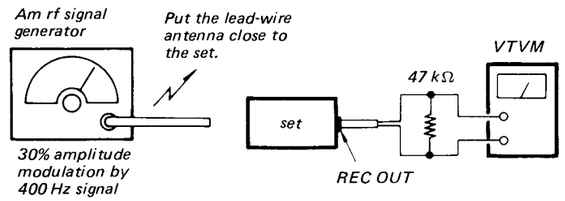

Procedure:

1. Tune the set to the SG signal.
2. Adjust for a maximum reading on VTVM.

MW

	SG and set frequency	Adjustment part	Reading on VTVM
1.	600 kHz	core of L901	Maximum
2	1,400 kHz	CT401	

LW

	SG and set frequency	Adjustment part	Reading on VTVM
1.	170 kHz	core of L901	Maximum
2.	310 kHz	CT403	

FM SECTION

The FM front-end is carefully adjusted at the factory and is supplied as one whole block for replacement.

FM Stereo Separation Adjustment

Procedures:

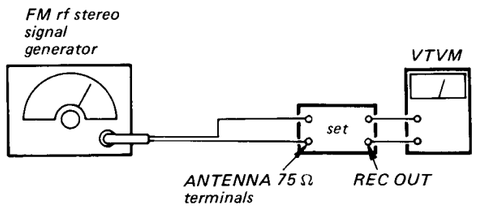

Carrier frequency: *98 MHz*
Output level: *1 mV (60 dB)*
Modulation
Audio 400 Hz: *16.25 kHz deviation*
Sub channel 38 kHz: *16.25 kHz deviation*
Pilot signal 19 kHz: *7.5 kHz deviation*

FM stereo signal generator output channel	VTVM connection	VTVM reading (dB)
L-CH	L-CH	Ⓐ
R-CH	L-CH	Ⓑ Adjust RT203 for minimum reading.
R-CH	R-CH	Ⓒ
L-CH	R-CH	Ⓓ Adjust RT203 for minimum reading.

L-CH Stereo separation: Ⓐ – Ⓑ
R-CH Stereo separation: Ⓒ – Ⓓ

The separations of both channels should be equal.

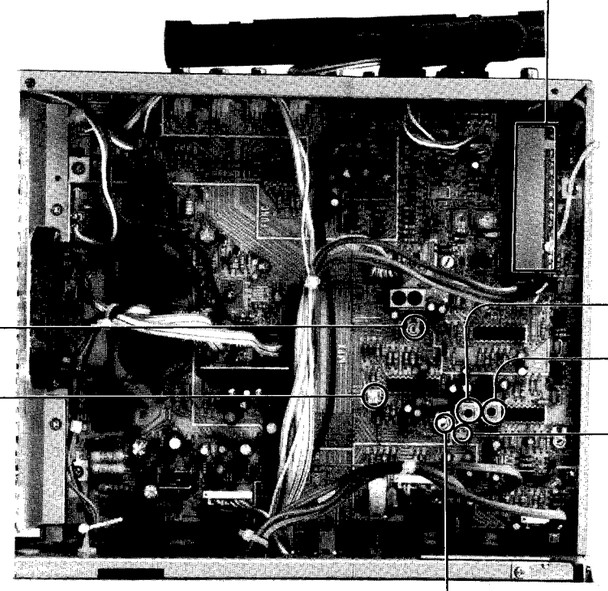

VCO Adjustment

A) Regular Method

Procedure:

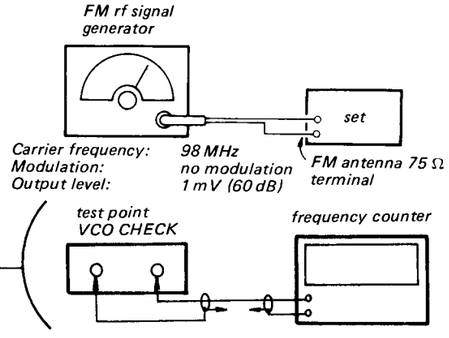

1. Tune the set to 98 MHz.
2. Adjust RT202 for 19 kHz ± 50 Hz on the counter.

B) Simple Method

Procedure:

1. Tune the set to the FM stereo broadcasting signal.
2. Turn RT202 clockwise or counterclockwise and memorize the lighting-up range of stereo lamp.
3. Secure RT202 at the center of the lighting-up range of both turns as shown below.

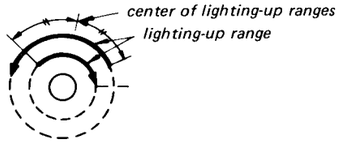

FM Discriminator Alignment 1

Setting:

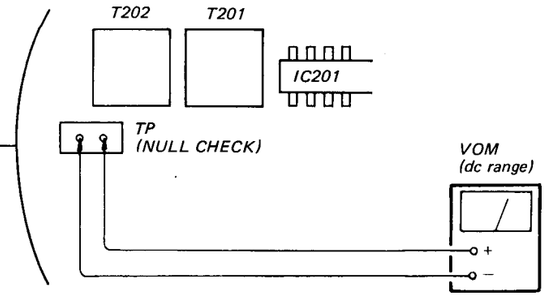

NULL CHECK
T202 (secondary side)
T201 (primary side)

Procedure:

1. Tune the set in the strong station-signal.
2. Adjust the black core (primary-side) of T201 for 0 V reading on VOM.

Note: When replacing the ceramic filter, perform this alignment.

FM Discriminator Alignment 2

Setting:

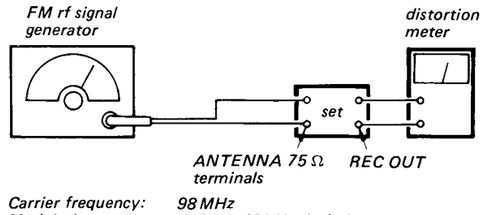

Carrier frequency: *98 MHz*
Modulation: *400 Hz, 40 kHz deviation (100%)*
Output level: *10 μV (20 dB)*

Procedure:

Adjust the white core (secondary side) of T202 for minimum distortion.

Note: When replacing the ceramic filter, perform this alignment.
Repeat the secondary-side and primary-side alignments several times.

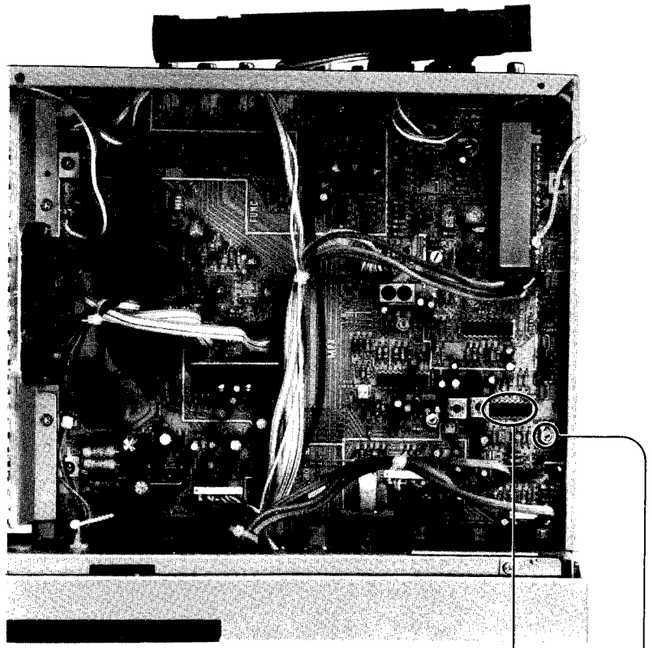

RT201

FM Auto Stop Level Adjustment

Setting:

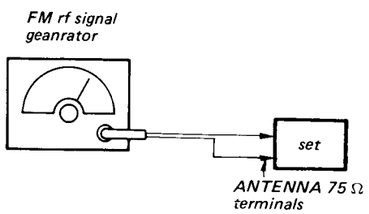

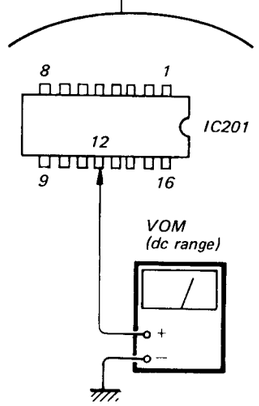

Procedure:

Carrier frequency:	*98 MHz*
Modulation:	*400 Hz, 40 kHz deviation (100%)*
Output level:	*56 μV (35 dB)*

1. Tune the set to 98 MHz by pressing the TUNING buttons.
2. Set RT201 to the position where the VOM reading changes from 5.8 V to 0 V.

MEMO

SECTION 4
DIAGRAMS

Note:

- All capacitors are in μF unless otherwise noted. pF: μμF 50WV or less are not indicated except for electrolytics and tantalums.
- All resistors are in ohms, 1/4 W unless otherwise noted. kΩ : 1000 Ω, MΩ : 1000 kΩ
- : nonflammable resistor.
- △ : internal component.
- : panel designation.
- : adjustment for repair.
- ——— : B+ bus.
- – – – : B- bus.
- Voltages are dc with respect to ground unless otherwise noted.
- Readings are taken under no-signal (detuned) conditions with a VOM.
  No mark: FM
  ( ) : MW
  < > : LW
- Voltage variations may be noted due to normal production tolerances.
- Switch

Ref. No.	Switch	Position
S301	FM	OFF
S302	MW	OFF
S303	LW	OFF
S304	FM MODE	OFF
S305	1	OFF
S306	2	OFF
S307	3	OFF
S308	4	OFF
S309	5	OFF
S310	6	OFF
S311	7	OFF
S312	8	OFF
S313	9, PHONO	OFF
S314	0, DAD/AUX	OFF
S315	TUNING -	OFF
S316	TUNING +	OFF
S317	MEMORY SCAN	OFF
S318	MEMORY	OFF

- : signal path

Note: Voltages are measured with a VOM (50kΩ/V).

Note: The components identified by shading and mark ⚠ are critical for safety. Replace only with part number specified.

4-1. SCHEMATIC DIAGRAM

— Tuner/Indicator Section —

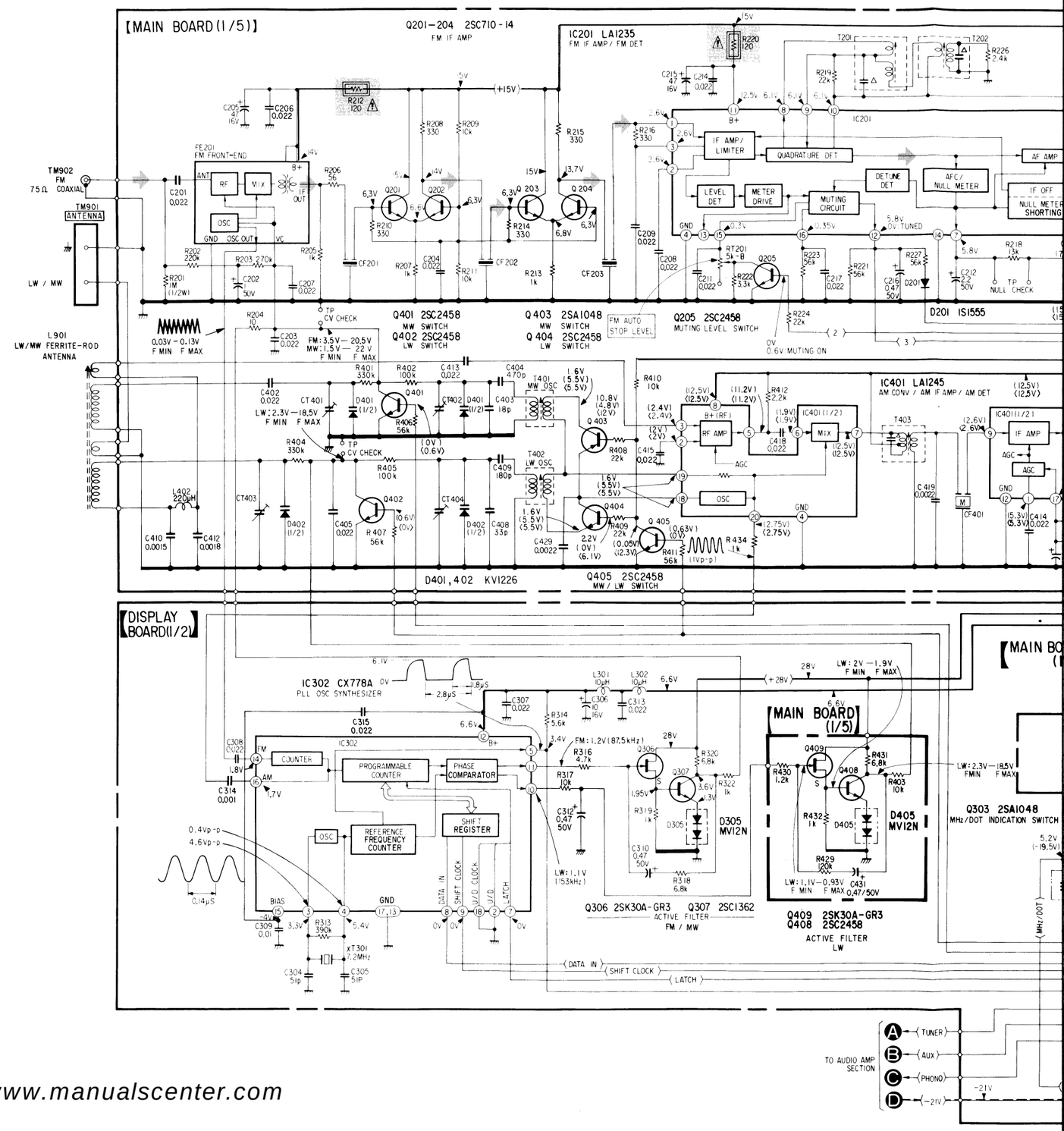

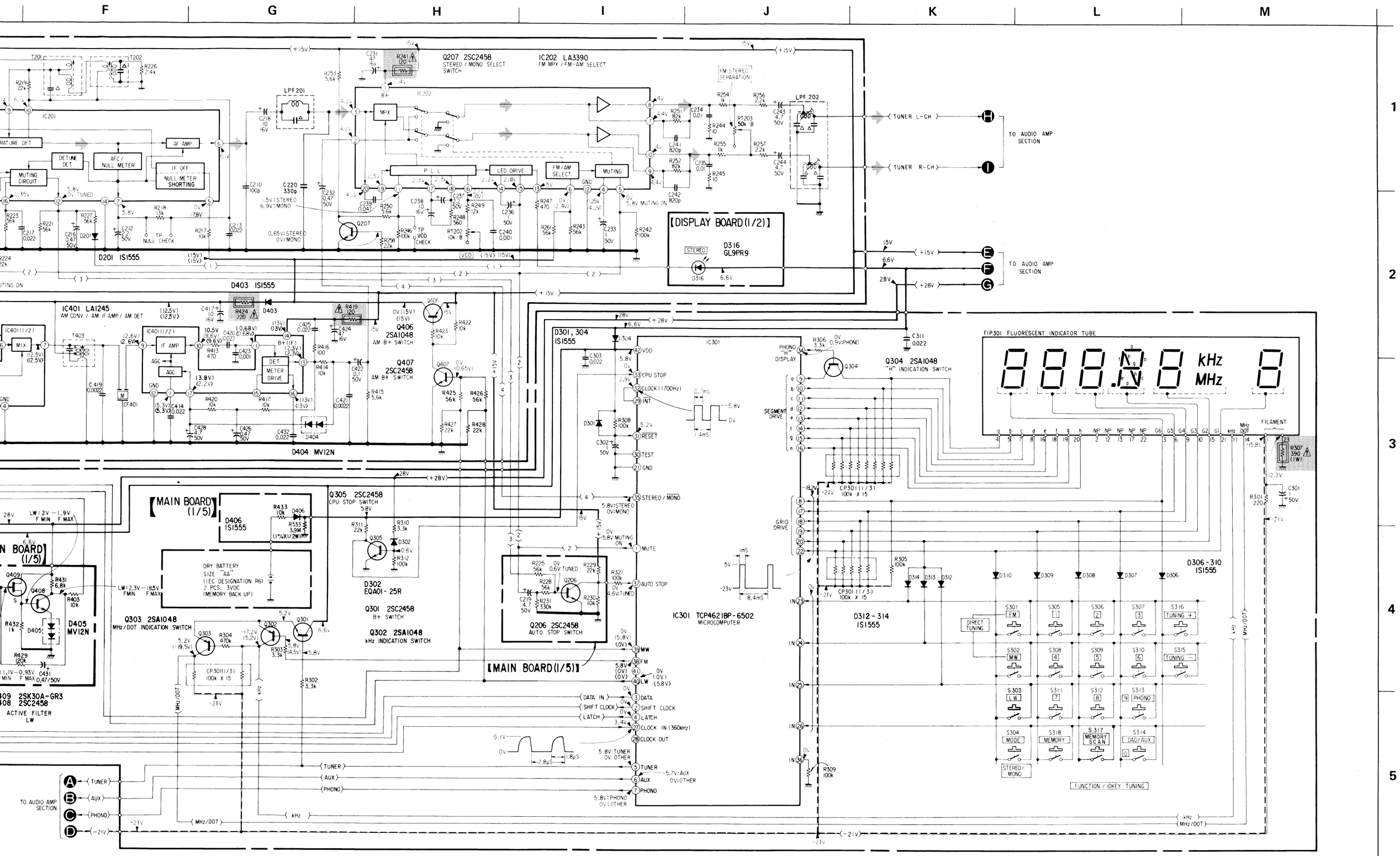

4-2. SCHEMATIC DIAGRAM

– Function Switch/Amplifier/Power Supply Section –

Note:

- All capacitors are in μF unless otherwise noted. pF: μμF 50WV or less are not indicated except for electrolytics and tantalums.
- All resistors are in ohms, 1/4 W unless otherwise noted. kΩ : 1000 Ω, MΩ : 1000 kΩ
- : nonflammable resistor.
- : fusible resistor.
- △ : internal component.
- ▭ : panel designation.
- ——— : B+ bus.
- – – – : B– bus.
- Voltages are dc with respect to ground unless otherwise noted.
- Readings are taken under no-signal (detuned) conditions with a VOM.
  No mark: FM
  ( ) : MW
  < > : LW
- Voltage variations may be noted due to normal production tolerances.
- Switch

Ref. No.	Switch	Position
S5-1	TAPE 1	OFF
S5-2	TAPE 2	OFF
S6	LOUDNESS	OFF
S7-1	SPEAKER B	OFF
S7-2	SPEAKER A	ON
S901	POWER	OFF

- : signal path

Note: Voltages are measured with a VOM (50kΩ/V).

Note: The components identified by shading and mark ⚠ are critical for safety. Replace only with part number specified.

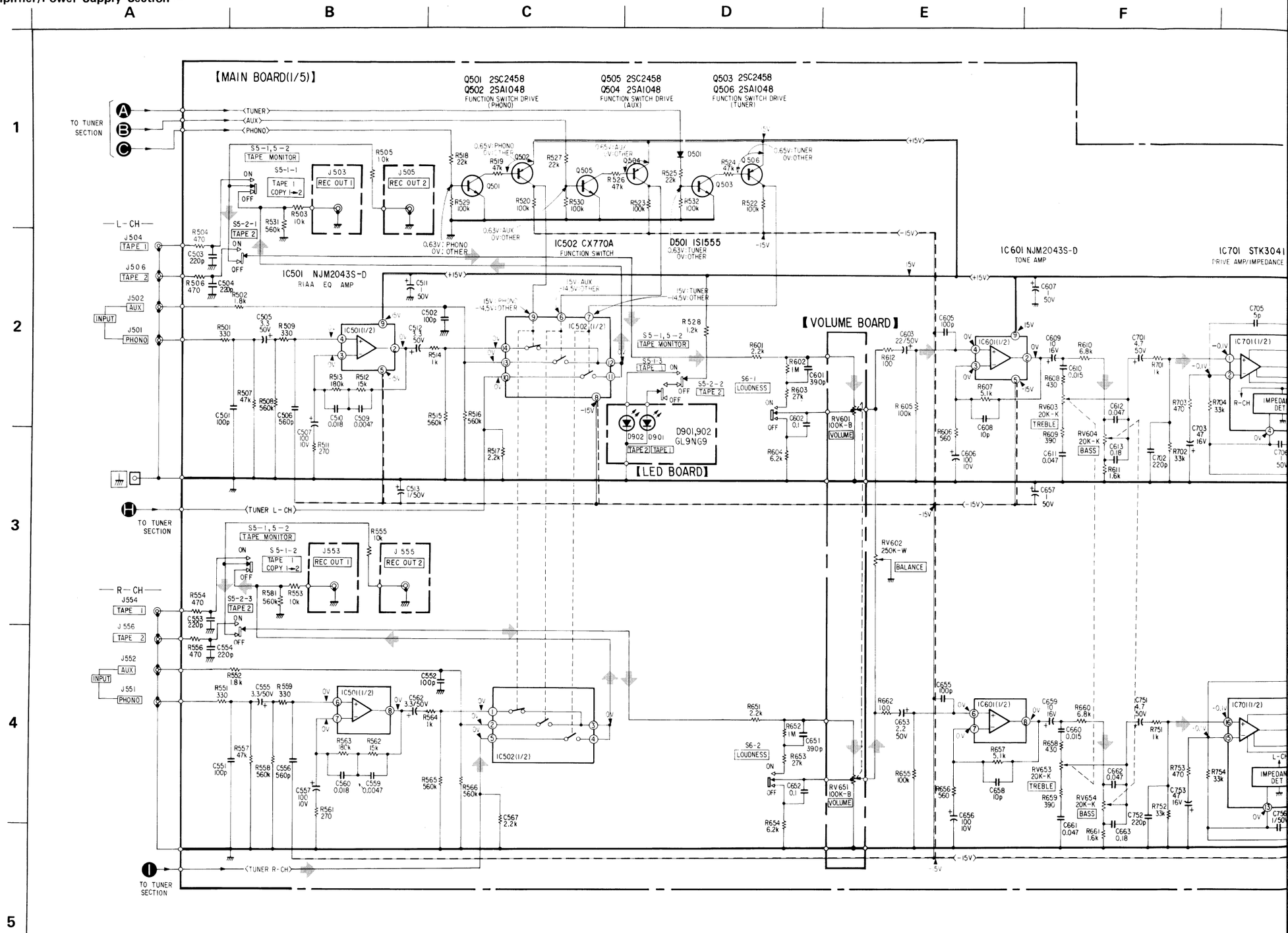

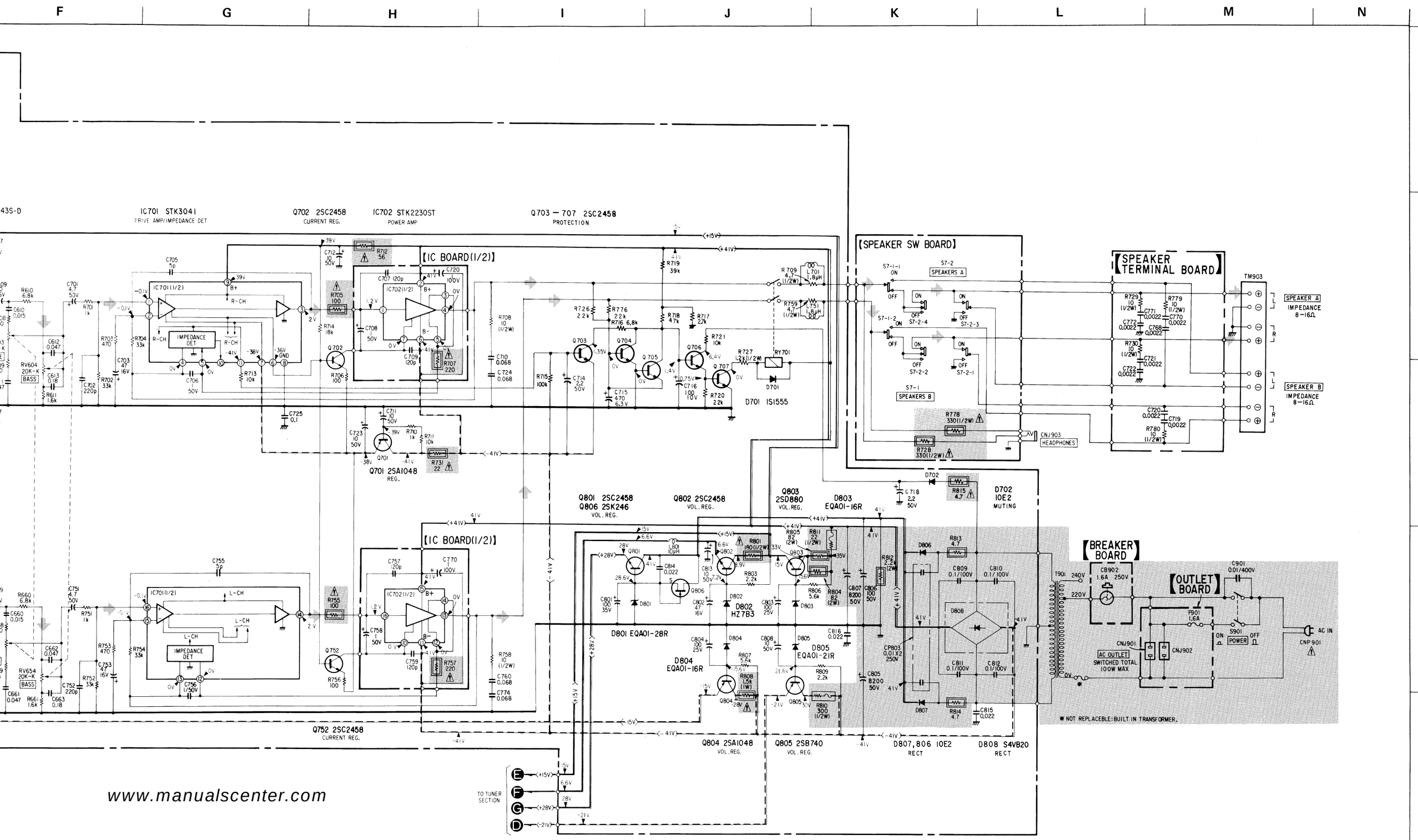

4-3. MOUNTING DIAGRAM

● See page 41 for Semiconductor Lead Layouts.

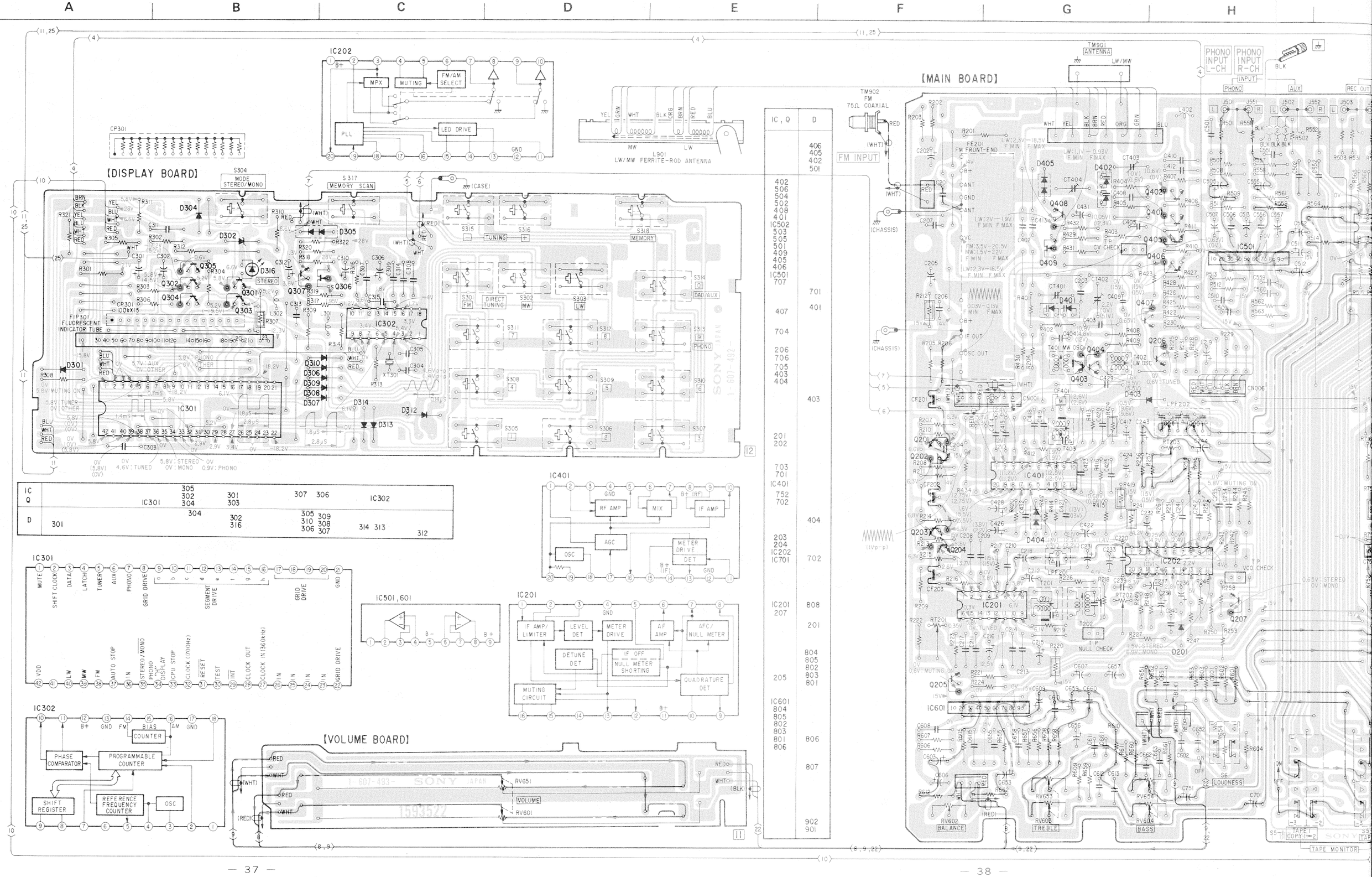

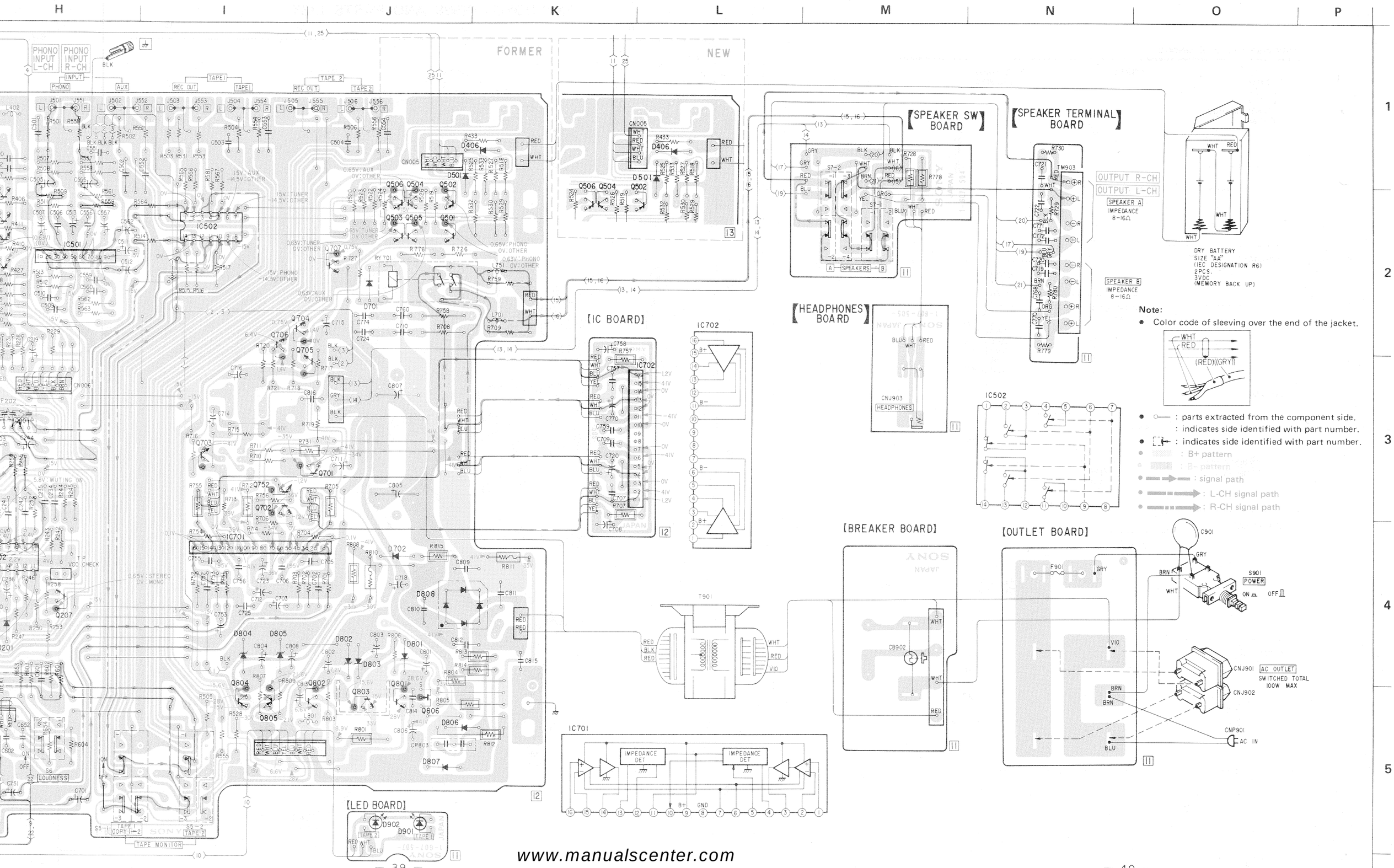

Semiconductor Lead Layouts

LA1235
LA3390
LA1245
CX-770A
TCP4621 BP-6502
CX-778A

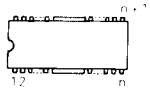

(Top view)

NJM2043S-D

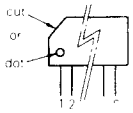

STK-3041

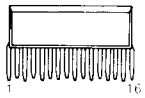

STK-2230ST

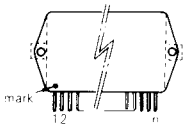

(Marking side view)

2SC710-14

2SD880

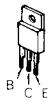

2SB740
2SC1362

2SK30A-GR3
2SK246

KV1226

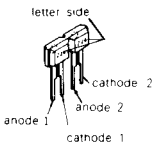

MV12N

S4VB40

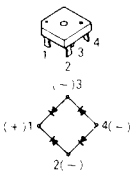

2SA1048
2SC2458

1S1555
10E-2
EQB01-28
EQA01-28R
RD7.5EB1
EQA01-16R
EQB01-16
EQA01-21R
EQB01-21
HZ7B3
EQA01-25R

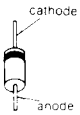

GL-9PR9
GL-9NG9

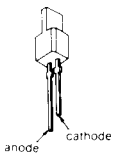

SECTION 5
EXPLODED VIEWS AND PARTS LIST

5-1.

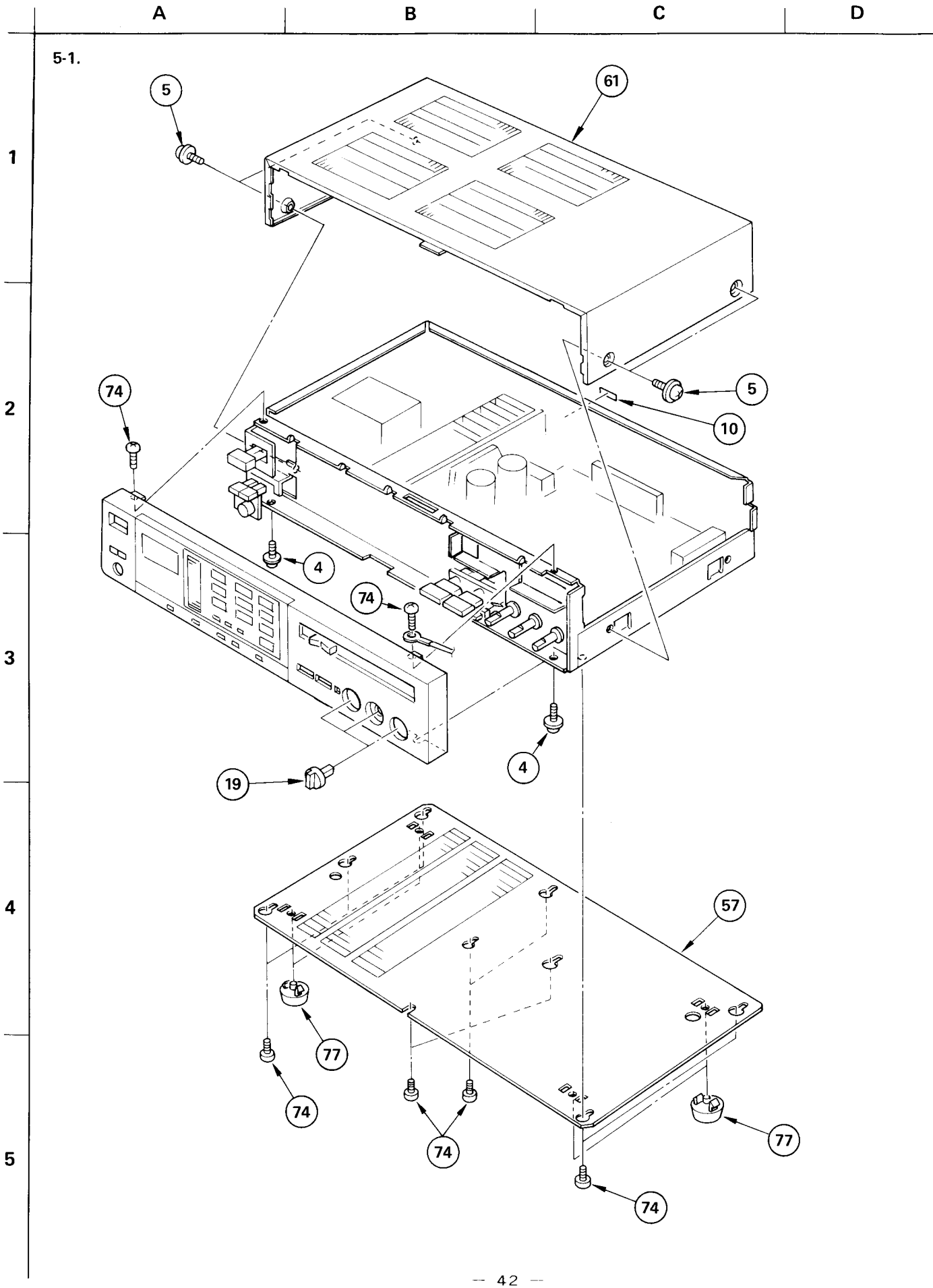

5-2.

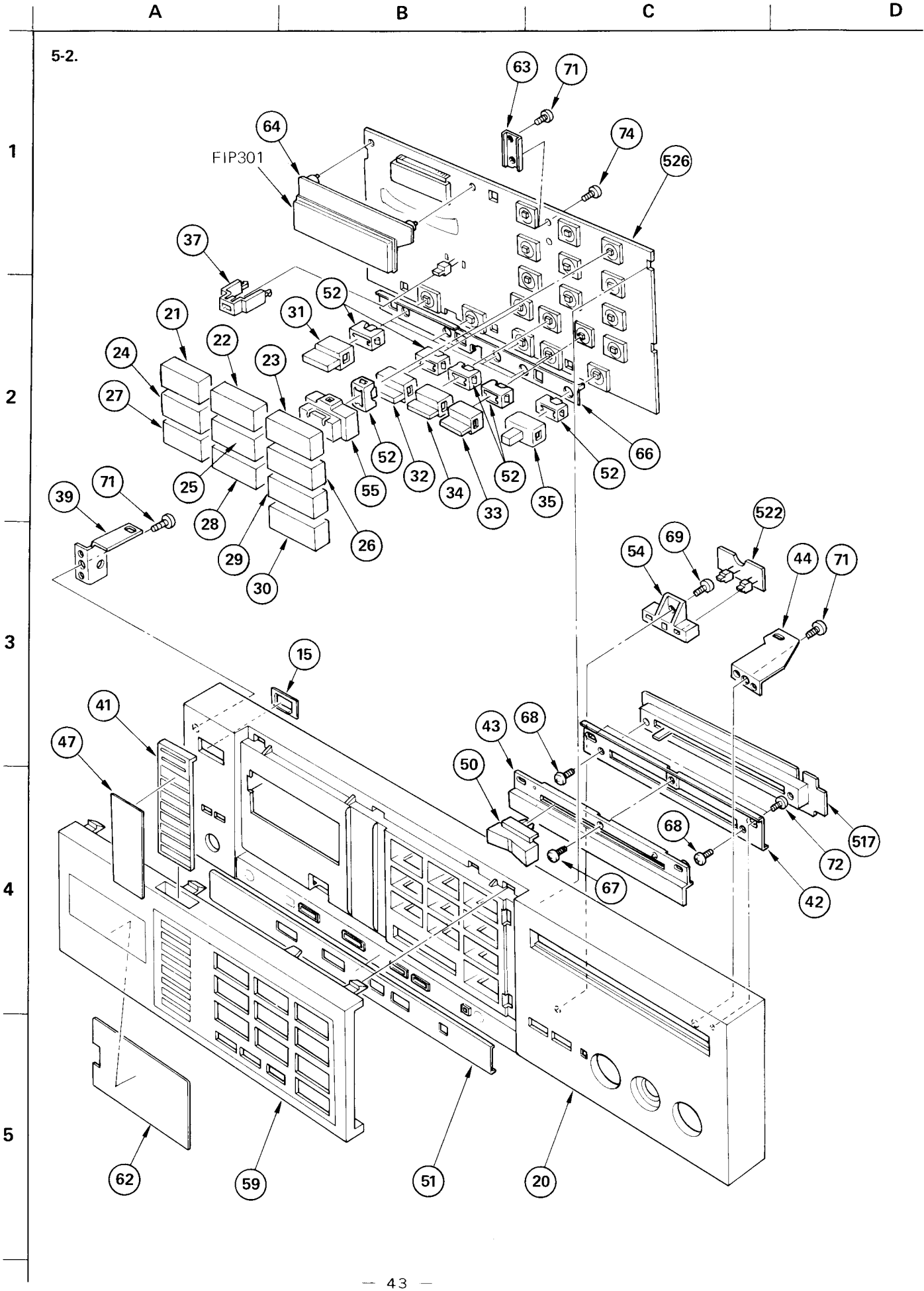

5-3.

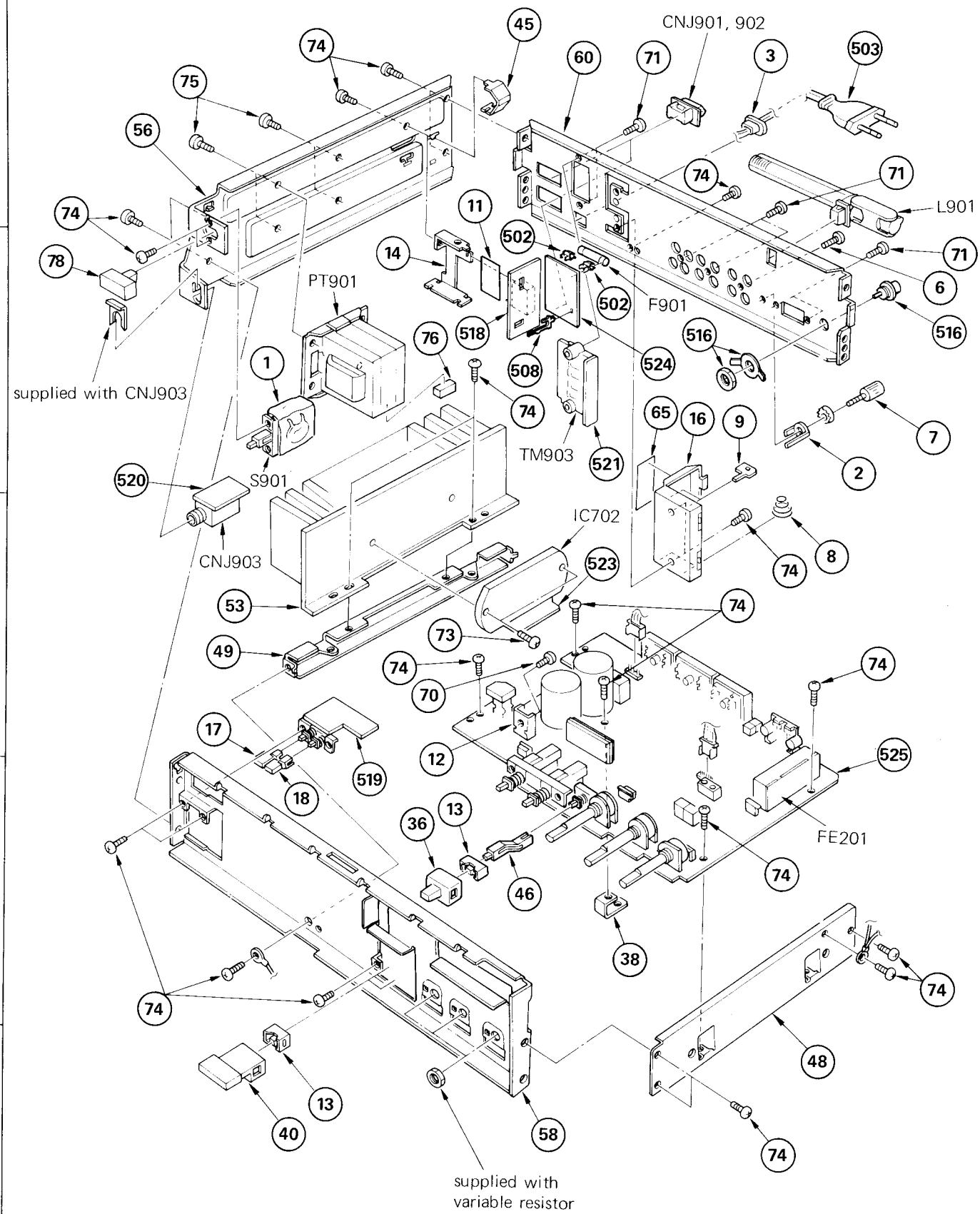

GENERAL SECTION

No.	Part No.	Description
1	3-559-001-00	COVER, POWER SWITCH
2	3-701-993-00	SPACER, TERMINAL
3	3-703-244-00	BUSHING, CORD
4	3-703-249-01	SCREW, S TIGHT, +PTTWH 3X6
5	3-703-354-11	SCREW (OS), CASE, CLAW
6	3-703-473-00	SCREW, TERMINAL
7	3-706-165-00	SCREW
8	3-883-424-00	SPRING
9	3-883-428-00	PLATE, TERMINAL (POSITIVE)
10 ♣	4-844-449-00	LABEL
11	4-854-027-00	INSULATOR
12 ♣	4-857-562-00	HEAT SINK, TR
13	4-864-307-00	RING
14 ♣	4-868-906-00	BRACKET, BREAKER
15	4-871-324-00	ESCUTCHEON, POWER KNOB
16	4-875-530-00	CASE, BATTERY
17	4-876-722-01	KNOB (4X10), SQUARE
18	4-876-722-11	KNOB (4X10), SQUARE
19	4-881-520-01	KNOB (DIA. 18)
20	4-881-701-11	PANEL (B)
21	4-881-703-01	CAP, KNOB (12X25), SQUARE
22	4-881-703-11	CAP, KNOB (12X25), SQUARE
23	4-881-703-21	CAP, KNOB (12X25), SQUARE
24	4-881-703-31	CAP, KNOB (12X25), SQUARE
25	4-881-703-41	CAP, KNOB (12X25), SQUARE
26	4-881-703-51	CAP, KNOB (12X25), SQUARE
27	4-881-703-61	CAP, KNOB (12X25), SQUARE
28	4-881-703-71	CAP, KNOB (12X25), SQUARE
29	4-881-703-81	CAP, KNOB (12X25), SQUARE
30	4-881-703-91	CAP, KNOB (12X25), SQUARE
31	4-881-704-01	KNOB (5X16), SQUARE
32	4-881-704-11	KNOB (5X16), SQUARE
33	4-881-704-31	KNOB (5X16), SQUARE
34	4-881-704-41	KNOB (5X16), SQUARE
35	4-881-705-01	KNOB (5X6), SQUARE
36	4-881-705-11	KNOB (5X6), SQUARE
37 ♣	4-881-706-00	HOLDER (B), LED
38 ♣	4-881-707-00	BRACKET, PC BOARD
39 ♣	4-881-708-00	BRACKET (LEFT), PANEL
40	4-881-709-00	KNOB (5X19), SQUARE
41	4-881-710-00	HOLDER, STATION
42 ♣	4-881-711-00	BRACKET, CONTROL
43	4-881-712-00	PLATE, ORNAMENTAL, CONTROL
44 ♣	4-881-713-00	BRACKET (RIGHT), PANEL
45 ♣	4-881-714-00	PROTECTOR

GENERAL SECTION

No.	Part No.	Description
46 ♣	4-881-717-00	JOINT
47	4-881-719-00	LABEL, STATION
48 ♣	4-881-721-00	PLATE (RIGHT), SIDE
49 ♣	4-881-722-00	BRACKET, HEAT SINK
50	4-881-723-00	KNOB, CONTROL, SLIDE
51	4-881-724-01	PLATE, ORNAMENTAL
52	4-881-725-00	RING (TACT), FLEXIBLE
53 ♣	4-881-726-00	HEAT SINK (B)
54 ♣	4-881-727-00	HOLDER (A), LED
55	4-881-728-00	BASE, KNOB (12X25), SQUARE
56 ♣	4-881-729-00	PLATE (LEFT), SIDE
57 ♣	4-881-730-00	PLATE, BOTTOM
58 ♣	4-881-732-00	PANEL (B), SUB
59 ♣	4-881-733-21	PANEL, 10 KEY
60 ♣	4-881-735-11	PLATE, JACK
61	4-881-736-00	CASE
62	4-881-737-00	FILTER
63 ♣	4-881-743-00	HOLDER, DISPLAY
64 ♣	4-881-744-00	HOLDER, FL TUBE
65 ♣	4-881-747-00	LABEL, BATTERY
66 ♣	4-881-751-02	CASE, SHIELD
67	7-621-284-00	SCREW +P 2.6X4
68	7-682-145-01	SCREW +P 3X4
69	7-685-134-11	SCREW +P 2.6X8 TYPE2 NON-SLIT
70	7-685-645-71	SCREW +BVTP 3X6 TYPE2 SLIT
71	7-685-646-11	SCREW +BVTP 3X8 TYPE2 N-S
72	7-685-648-11	SCREW +BVTP 3X12 TYPE2 N-S
73	7-685-649-11	SCREW +BVTP 3X14 TYPE2 N-S
74	7-685-871-01	SCREW +BVTT 3X6 (S)
75	7-685-880-01	SCREW +BVTT 4X6 (S)
76	9-911-846-XX	CUSHION
77	X-4864-303-0	FOOT ASSY
78	X-4875-108-0	KNOB ASSY, POWER

NOTE:
- Items with no part number and no description are not stocked because they are seldom required for routine service.
- Items marked " ♣ " are not stocked since they are seldom required for routine service. Some delay should be anticipated when ordering these items.
- Due to standardization, parts with part numbers (Δ-ΔΔΔ-ΔΔΔ-XX or Δ-ΔΔΔΔ-ΔΔΔ-X) may be different from those used in the set.

CAPACITORS:
- All capacitors are in μF. Common capacitors are omitted. Refer to the following lists for their part numbers. MF:μF, PF:μμF.

RESISTORS
- All resistors are in ohms. Common 1/4W, 1/8W and 1/16W carbon resistors are omitted. Refer to the following lists for their part numbers.
- F : nonflammable

COILS
- MMH : mH, UH : μH

SEMICONDUCTORS
In each case, U : μ, for example:
UA···: μA···, UPA···: μPA···, UPC···: μPC, UPD···: μPD···

ACCESSORY & PACKING MATERIAL

No.	Part No.	Description
101	1-528-027-11	BATTERY, NEW SUPER (SUM-3)(NS)
102	3-701-630-00	BAG, POLYETHYLENE
103	3-703-540-01	INSTRUCTION, FTZ
104	3-783-977-11	MANUAL, INSTRUCTION
105	3-795-424-11	CARD, CONTROL
106	4-858-078-00	SHEET, PROTECTION
107	4-881-738-00	CUSHION, UPPER
108	4-881-739-00	CUSHION, LOWER
109	4-881-742-00	INDIVIDUAL CARTON
110	X-4881-901-0	LABEL ASSY (EP), STATION

ELECTRICAL PARTS

Ref.No.	Part No.	Description
501	♦;1-508-994-00	PIN, CONNECTOR
502	1-533-131-00	HOLDER, FUSE
503	⚠1-534-817-XX	CORD, POWER, EULO PLUG
504	♦;1-535-115-00	TERMINAL
505	♦;1-535-116-00	TERMINAL
506	♦;1-535-120-00	TERMINAL
507	♦;1-535-137-00	BASE POST 14MM (10MM PITCH
508	♦;1-535-416-00	TERMINAL
509	♦;1-560-039-00	PIN, CONNECTOR
510	♦;1-560-060-00	PIN, CONNECTOR 2P
511	♦;1-560-061-00	PIN, CONNECTOR 3P
512	♦;1-560-282-00	CONNECTOR PIN 7P
513	♦;1-561-439-00	SOCKET, CONNECTOR 3P
514	♦;1-561-442-00	SOCKET, CONNECTOR 6P
515	♦;1-561-443-00	SOCKET, CONNECTOR 7P
516	1-561-919-00	SOCKET, CONNECTOR
517	♦;1-607-493-00	PC BOARD, VOLUME
518	♦;1-607-494-00	PC BOARD, BREAKER
519	♦;1-607-495-00	PC BOARD, SPEAKER SW
520	♦;1-607-496-00	PC BOARD, HEADPHONE
521	♦;1-607-497-00	PC BOARD, SPEAKER TERMINAL
522	♦;1-607-498-00	PC BOARD, LED
523	♦;1-607-499-00	PC BOARD, IC
524	♦;1-608-121-00	PC BOARD, OUTLET
525	♦;A-4409-628-A	MOUNTED PCB, MAIN
526	♦;A-4472-095-A	MOUNTED PCB, DISPLAY

ELECTRICAL PARTS

Ref.No.	Part No.	Description			
C601	1-161-318-00	CERAMIC	390PF	10%	50V
C651	1-161-318-00	CERAMIC	390PF	10%	50V
C805	⚠1-125-292-00	ELECT (BLOCK)	8200MF	20%	50V
C806	⚠1-123-513-00	ELECT	100MF	20%	50V
C807	⚠1-125-292-00	ELECT (BLOCK)	8200MF	20%	50V
C809	⚠1-108-389-00	MYLAR	0.1MF	10%	100V
C810	⚠1-108-389-00	MYLAR	0.1MF	10%	100V
C811	⚠1-108-389-00	MYLAR	0.1MF	10%	100V
C812	⚠1-108-389-00	MYLAR	0.1MF	10%	100V
C901	⚠1-161-744-00	CAP, CERAMIC	10000PF		
CB902	⚠1-532-534-00	CIRKIT BREAKER			
CF201	1-527-344-91	FILTER, CERAMIC			
CF202	1-527-344-91	FILTER, CERAMIC			
CF203	1-527-344-91	FILTER, CERAMIC			
CF401	1-527-599-00	FILTER, MECHANICAL			
CNJ901	⚠1-526-694-00	OUTLET, AC			
CNJ902	⚠1-526-694-00	OUTLET, AC			
CNJ903	1-507-669-00	JACK			
CP803	⚠1-102-394-00	CERAMIC	(0.01MF+0.01MF)		250V
CT401	1-141-180-00	CAP, TRIMMER 15P			
CT402	1-141-180-00	CAP, TRIMMER 15P			
CT403	1-141-181-11	CAP, TRIMMER			
CT404	1-141-181-11	CAP, TRIMMER			
D201	8-719-815-55	DIODE 1S1555			
D301	8-719-815-55	DIODE 1S1555			
D302	8-719-936-25	DIODE EQA01-25R			
D304	8-719-815-55	DIODE 1S1555			
D305	8-719-912-00	DIODE MV-12N			
D306	8-719-815-55	DIODE 1S1555			
D307	8-719-815-55	DIODE 1S1555			
D308	8-719-815-55	DIODE 1S1555			
D309	8-719-815-55	DIODE 1S1555			
D310	8-719-815-55	DIODE 1S1555			
D312	8-719-815-55	DIODE 1S1555			
D313	8-719-815-55	DIODE 1S1555			
D314	8-719-815-55	DIODE 1S1555			
D316	8-719-909-18	DIODE GL-9PR9			
D401	8-719-912-27	DIODE KV1226			
D402	8-719-912-27	DIODE KV1226			
D403	8-719-815-55	DIODE 1S1555			
D404	8-719-912-00	DIODE MV-12N			
D405	8-719-912-00	DIODE MV-12N			
D406	8-719-815-55	DIODE 1S1555			
D501	8-719-815-55	DIODE 1S1555			

NOTE:
- Items with no part number and no description are not stocked because they are seldom required for routine service.
- Items marked " ♦ " are not stocked since they are seldom required for routine service. Some delay should be anticipated when ordering these items.
- Due to standardization, parts with part numbers (Δ-ΔΔΔ-ΔΔΔ-XX or Δ-ΔΔΔΔ-ΔΔΔ-X) may be different from those used in the set.

CAPACITORS:
- All capacitors are in μF. Common capacitors are omitted. Refer to the following lists for their part numbers. MF:μF, PF:μμF.

RESISTORS
- All resistors are in ohms. Common 1/4W, 1/8W and 1/16W carbon resistors are omitted. Refer to the following lists for their part numbers.
- F : nonflammable

COILS
- MMH : mH, UH : μH

The components identified by shading and mark ⚠ are critical for safety. Replace only with part number specified.

SEMICONDUCTORS
In each case, U : μ, for example:
UA···: μA···, UPA···: μPA···, UPC···: μPC, UPD···: μPD···

ELECTRICAL PARTS

Ref.No.	Part No.	Description
D701	8-719-815-55	DIODE 1S1555
D702	8-719-200-02	DIODE 10E-2
D801	8-719-931-28	DIODE EQB01-28
D802	8-719-100-43	DIODE RD7.5EB1
D803	8-719-931-16	DIODE EQB01-16
D804	8-719-931-16	DIODE EQB01-16
D805	8-719-931-21	DIODE EQB01-21
D806 ⚠	8-719-200-02	DIODE 10E-2
D807 ⚠	8-719-200-02	DIODE 10E-2
D808 ⚠	8-719-504-40	DIODE S4VB40
D901	8-719-909-19	DIODE GL-9NG9
D902	8-719-909-19	DIODE GL-9NG9
F901 ⚠	1-532-285-00	FUSE, TIME-LAG
FE201	A-4344-031-A	FRONT END
FIP301	1-519-256-00	INDICATOR TUBE, FLUORESCENT
IC201	8-759-812-35	IC LA1235
IC202	8-759-833-90	IC LA3390
IC301	8-759-200-66	IC TCP4621BP-6502
IC302	8-759-617-78	IC CX-778A
IC401	8-759-812-45	IC LA1245
IC501	8-759-700-05	IC NJM2043S-D
IC502	8-759-307-70	IC CX-770A
IC601	8-759-700-05	IC NJM2043S-D
IC701	8-749-930-41	IC STK-3041
IC702	8-759-822-30	IC STK-2230ST
J501	1-507-788-00	JACK, PIN 4P
J502	1-507-788-00	JACK, PIN 4P
J503	1-507-788-00	JACK, PIN 4P
J504	1-507-788-00	JACK, PIN 4P
J505	1-507-788-00	JACK, PIN 4P
J506	1-507-788-00	JACK, PIN 4P
J551	1-507-788-00	JACK, PIN 4P
J552	1-507-788-00	JACK, PIN 4P
J553	1-507-788-00	JACK, PIN 4P
J554	1-507-788-00	JACK, PIN 4P
J555	1-507-788-00	JACK, PIN 4P
J556	1-507-788-00	JACK, PIN 4P
L301	1-408-183-00	MICRO INDUCTOR 10UH
L302	1-408-183-00	MICRO INDUCTOR 10UH
L402	1-408-199-00	MICRO INDUCTOR 220UH
L701 ♠	1-420-872-00	COIL, AIRE CORE
L751 ♠	1-420-872-00	COIL, AIRE CORE
L801	1-408-183-00	MICRO INDUCTOR 10UH
L901	1-401-929-21	ANTENNA, FERRITE-ROD (LW/MW)

ELECTRICAL PARTS

Ref.No.	Part No.	Description
LPF201	1-235-125-00	ENCAPSULATED COMPONENT
LPF202	1-235-062-00	FILTER, LOW PASS
PT901 ⚠	1-447-299-00	TRANSFORMER, POWER
Q201	8-729-671-14	TRANSISTOR 2SC710-14
Q202	8-729-671-14	TRANSISTOR 2SC710-14
Q203	8-729-671-14	TRANSISTOR 2SC710-14
Q204	8-729-671-14	TRANSISTOR 2SC710-14
Q205	8-729-245-83	TRANSISTOR 2SC2458GR
Q206	8-729-245-83	TRANSISTOR 2SC2458GR
Q207	8-729-245-83	TRANSISTOR 2SC2458GR
Q301	8-729-245-83	TRANSISTOR 2SC2458GR
Q302	8-729-204-82	TRANSISTOR 2SA1048
Q303	8-729-204-82	TRANSISTOR 2SA1048
Q304	8-729-204-82	TRANSISTOR 2SA1048
Q305	8-729-245-83	TRANSISTOR 2SC2458GR
Q306	8-729-203-05	TRANSISTOR 2SK30A-GR3
Q307	8-729-665-47	TRANSISTOR 2SC1362
Q401	8-729-245-83	TRANSISTOR 2SC2458GR
Q402	8-729-245-83	TRANSISTOR 2SC2458GR
Q403	8-729-204-82	TRANSISTOR 2SA1048
Q404	8-729-245-83	TRANSISTOR 2SC2458GR
Q405	8-729-245-83	TRANSISTOR 2SC2458GR
Q406	8-729-204-82	TRANSISTOR 2SA1048
Q407	8-729-245-83	TRANSISTOR 2SC2458GR
Q408	8-729-245-83	TRANSISTOR 2SC2458GR
Q409	8-729-203-05	TRANSISTOR 2SK30A-GR3
Q501	8-729-245-83	TRANSISTOR 2SC2458GR
Q502	8-729-204-82	TRANSISTOR 2SA1048
Q503	8-729-245-83	TRANSISTOR 2SC2458GR
Q504	8-729-204-82	TRANSISTOR 2SA1048
Q505	8-729-245-83	TRANSISTOR 2SC2458GR
Q506	8-729-204-82	TRANSISTOR 2SA1048
Q701	8-729-204-82	TRANSISTOR 2SA1048
Q702	8-729-245-83	TRANSISTOR 2SC2458GR
Q703	8-729-245-83	TRANSISTOR 2SC2458GR
Q704	8-729-245-83	TRANSISTOR 2SC2458GR
Q705	8-729-245-83	TRANSISTOR 2SC2458GR
Q706	8-729-245-83	TRANSISTOR 2SC2458GR
Q707	8-729-245-83	TRANSISTOR 2SC2458GR
Q752	8-729-245-83	TRANSISTOR 2SC2458GR
Q801	8-729-245-83	TRANSISTOR 2SC2458GR
Q802	8-729-245-83	TRANSISTOR 2SC2458GR
Q803	8-729-288-02	TRANSISTOR 2SD880
Q804	8-729-204-82	TRANSISTOR 2SA1048
Q805	8-729-374-02	TRANSISTOR 2SB740
Q806	8-729-224-62	TRANSISTOR 2SK246

NOTE:
- Items with no part number and no description are not stocked because they are seldom required for routine service.
- Items marked " ♠ " are not stocked since they are seldom required for routine service. Some delay should be anticipated when ordering these items.
- Due to standardization, parts with part numbers (Δ-ΔΔΔ-ΔΔΔ-XX or Δ-ΔΔΔΔ-ΔΔΔ-X) may be different from those used in the set.

CAPACITORS:
- All capacitors are in μF. Common capacitors are omitted. Refer to the following lists for their part numbers. MF:μF, PF:μμF.

RESISTORS
- All resistors are in ohms. Common 1/4W, 1/8W and 1/16W carbon resistors are omitted. Refer to the following lists for their part numbers.
- F : nonflammable

COILS
- MMH : mH, UH : μH

The components identified by shading and mark ⚠ are critical for safety. Replace only with part number specified.

SEMICONDUCTORS
In each case, U : μ, for example:
UA···: μA···, UPA···: μPA···, UPC···: μPC, UPD···: μPD···

ELECTRICAL PARTS

Ref.No.	Part No.	Description				
R201	1-244-945-00	CARBON	1M	5%	1/2W	
R212 ⚠	1-247-109-00	CARBON	230	5%	1/4W	F
R220 ⚠	1-247-109-00	CARBON	230	5%	1/4W	F
R241 ⚠	1-247-109-00	CARBON	230	5%	1/4W	F
R301	1-244-857-00	CARBON	220	5%	1/2W	
R307 ⚠	1-213-138-00	METAL	390	5%	1W	F
R419 ⚠	1-247-109-00	CARBON	230	5%	1/4W	F
R424 ⚠	1-247-115-00	CARBON	220	5%	1/4W	F
R533	1-214-951-00	METAL	3.9M	1%	1/2W	
R705 ⚠	1-247-107-00	CARBON	100	5%	1/4W	F
R707 ⚠	1-247-115-00	CARBON	220	5%	1/4W	F
R708	1-244-825-00	CARBON	10	5%	1/2W	
R709	1-244-817-00	CARBON	4.7	5%	1/2W	
R712 ⚠	1-247-101-00	CARBON	56	5%	1/4W	F
R727	1-244-875-00	CARBON	1.2K	5%	1/2W	
R728 ⚠	1-247-228-00	CARBON	330	5%	1/2W	F
R729	1-244-825-00	CARBON	10	5%	1/2W	
R730	1-244-825-00	CARBON	10	5%	1/2W	
R731 ⚠	1-247-091-00	CARBON	22	5%	1/4W	F
R755 ⚠	1-247-107-00	CARBON	100	5%	1/4W	F
R757 ⚠	1-247-115-00	CARBON	220	5%	1/4W	F
R758	1-244-825-00	CARBON	10	5%	1/2W	
R759	1-244-817-00	CARBON	4.7	5%	1/2W	
R778 ⚠	1-247-228-00	CARBON	330	5%	1/2W	F
R779	1-244-825-00	CARBON	10	5%	1/2W	
R780	1-244-825-00	CARBON	10	5%	1/2W	
R801 ⚠	1-247-222-00	CARBON	180	5%	1/2W	F
R804 ⚠	1-206-485-00	METAL	82	5%	2W	F
R805 ⚠	1-206-485-00	METAL	82	5%	2W	F
R808 ⚠	1-213-145-00	METAL	1.5K	5%	1W	F
R810 ⚠	1-212-993-00	FUSIBLE	300	5%	1/2W	F
R811 ⚠	1-212-966-00	FUSIBLE	22	5%	1/2W	F
R812 ⚠	1-206-672-00	METAL	2.2K	5%	2W	F
R813 ⚠	1-247-079-00	CARBON	4.7	5%	1/4W	F
R814 ⚠	1-247-079-00	CARBON	4.7	5%	1/4W	F
R815 ⚠	1-247-079-00	CARBON	4.7	5%	1/4W	F
RT201	1-226-236-00	RES, ADJ, CARBON 10K				
RT202	1-226-236-00	RES, ADJ, CARBON 10K				
RT203	1-226-238-00	RES, ADJ, CARBON 50K				
RV601	1-228-613-00	RES, VAR, SLIDE 100K				
RV602	1-228-610-00	RES, VAR, CARBON 250K				
RV603	1-228-611-00	RES, VAR, CARBON 20K/20K				
RV604	1-228-611-00	RES, VAR, CARBON 20K/20K				
RV651	1-228-613-00	RES, VAR, SLIDE 100K				
RV653	1-228-611-00	RES, VAR, CARBON 20K/20K				
RV654	1-228-611-00	RES, VAR, CARBON 20K/20K				

ELECTRICAL PARTS

Ref.No.	Part No.	Description
RY701	1-515-348-00	RELAY
S5	1-554-120-00	SWITCH, PUSH (2 KEY)
S6	1-553-884-00	SWITCH, PUSH (1 KEY)
S7	1-553-761-00	SWITCH, PUSH (2 KEY)
S301	1-552-412-00	SWITCH, KEY BOARD
S302	1-552-412-00	SWITCH, KEY BOARD
S303	1-552-412-00	SWITCH, KEY BOARD
S304	1-552-412-00	SWITCH, KEY BOARD
S305	1-552-412-00	SWITCH, KEY BOARD
S306	1-552-412-00	SWITCH, KEY BOARD
S307	1-552-412-00	SWITCH, KEY BOARD
S308	1-552-412-00	SWITCH, KEY BOARD
S309	1-552-412-00	SWITCH, KEY BOARD
S310	1-552-412-00	SWITCH, KEY BOARD
S311	1-552-412-00	SWITCH, KEY BOARD
S312	1-552-412-00	SWITCH, KEY BOARD
S313	1-552-412-00	SWITCH, KEY BOARD
S314	1-552-412-00	SWITCH, KEY BOARD
S315	1-552-412-00	SWITCH, KEY BOARD
S316	1-552-412-00	SWITCH, KEY BOARD
S317	1-552-412-00	SWITCH, KEY BOARD
S318	1-552-412-00	SWITCH, KEY BOARD
S901 ⚠	1-553-447-00	SWITCH, PUSH (AC POWER)
T201	1-404-339-00	TRANSFORMER, DISCRIMINATOR
T202	1-404-338-00	TRANSFORMER, DISCRIMINATOR (FM)
T401	1-405-927-00	COIL, MW OSC
T402	1-405-914-00	COIL, LW OSC
T403	1-409-348-00	COIL, MECHANICAL FILTER
TM901	1-536-707-00	TERMINAL BOARD, PUSH 2P
TM903	1-536-706-00	TERMINAL BOARD (SP)
XT301	1-527-731-00	OSCILLATOR, CRYSTAL

NOTE:
- Items with no part number and no description are not stocked because they are seldom required for routine service.
- Items marked " ♦ " are not stocked since they are seldom required for routine service. Some delay should be anticipated when ordering these items.
- Due to standardization, parts with part numbers (Δ-ΔΔΔ-ΔΔΔ-XX or Δ-ΔΔΔΔ-ΔΔΔ-X) may be different from those used in the set.

CAPACITORS:
- All capacitors are in μF. Common capacitors are omitted. Refer to the following lists for their part numbers. MF:μF, PF:μμF.

RESISTORS
- All resistors are in ohms. Common 1/4W, 1/8W and 1/16W carbon resistors are omitted. Refer to the following lists for their part numbers.
- F : nonflammable

COILS
- MMH : mH, UH : μH

The components identified by shading and mark ⚠ are critical for safety. Replace only with part number specified.

SEMICONDUCTORS
In each case, U : μ, for example:
UA···: μA···, UPA···: μPA···, UPC···: μPC, UPD···: μPD···

ELECTROLYTIC CAPACITORS

RATING → : Use the high voltage rated one.

CAP. (μF)	6.3 VOLT. PART No.	10 VOLT. PART No.	16 VOLT. PART No.	25 VOLT. PART No.	35 VOLT. PART No.	50 VOLT. PART No.
0.47					→	1-121-726-00
1.0					→	1-121-391-00
2.2					→	1-121-450-00
3.3	→	→	→	1-121-392-00	→	1-121-393-00
4.7	→	→	→	1-121-395-00	→	1-121-396-00
10	→	→	1-121-651-00	1-121-398-00	→	1-121-738-00
22	→	→	1-121-479-00	1-121-480-00	1-121-662-00	1-121-152-00
33	→	→	1-121-403-00	1-121-404-00	1-121-652-00	1-121-405-00
47	→	1-121-352-00	1-121-409-00	1-121-410-00	1-121-653-00	1-121-411-00
100	→	1-121-414-00	1-121-415-00	1-121-416-00	1-121-357-00	1-121-417-00
220	1-121-419-00	1-121-420-00	1-121-421-00	1-121-422-00	1-121-261-00	1-121-423-00
330	1-121-751-00	1-121-805-00	1-121-521-00	1-121-654-00	1-121-655-00	1-121-656-00
470	1-121-424-00	1-121-425-00	1-121-426-00	1-121-733-00	1-121-361-00	1-121-810-00
1000	–	1-121-736-00	1-121-245-00	1-121-657-00	1-121-388-00	1-123-061-00
2200	1-121-658-00	1-121-659-00	1-121-660-00	1-123-067-00	1-121-984-00	
3300	1-121-661-00	1-123-075-00	1-123-071-00	–		–

CAP. (μF)	100 VOLT. PART No.	160 VOLT. PART No.	250 VOLT. PART No.	350 VOLT. PART No.
0.47	–	–	–	–
1.0	1-123-249-00	1-123-252-00	1-123-003-00	1-121-168-00
2.2	1-123-250-00	1-123-026-00		1-123-028-00
3.3	1-121-995-00	–	1-123-004-00	1-123-006-00
4.7	1-123-255-00	1-121-246-00	1-121-759-00	1-123-007-00
10	1-121-126-00	1-121-999-00	1-123-254-00	1-123-008-00
22	1-121-996-00	1-123-253-00	1-123-005-00	1-123-022-00
33	1-121-997-00	1-121-757-00	–	–
47	1-123-251-00	1-121-919-00	–	–
100	1-123-084-00	–	–	

CERAMIC CAPACITORS

RATING

CAP. (pF)	50 VOLT. PART No.	CAP. (pF)	50 VOLT. PART No.	CAP. (pF)	50 VOLT. PART No.	CAP. (μF)	50 VOLT. PART No.
0.5	1-101-837-00	22	1-102-959-00	150	1-101-361-00	0.001	1-102-074-00
0.75	1-101-586-00	24	1-102-960-00	160	1-101-367-00	0.0012	1-102-118-00
1.0	1-102-934-00	27	1-102-961-00	180	1-102-976-00	0.0015	1-102-119-00
1.5	1-101-576-00	30	1-102-962-00	200	1-102-977-00	0.0018	1-102-120-00
2.0	1-102-935-00	33	1-102-963-00	220	1-102-978-00	0.0022	1-102-121-00
3	1-102-936-00	36	1-102-964-00	240	1-102-979-00	0.0027	1-102-122-00
4	1-102-937-00	39	1-102-965-00	270	1-102-980-00	0.0033	1-102-123-00
5	1-102-942-00	43	1-102-966-00	300	1-102-981-00	0.0039	1-102-124-00
6	1-102-943-00	47	1-101-880-00	330	1-102-820-00	0.0047	1-102-125-00
7	1-102-944-00	51	1-101-882-00	360	1-102-821-00	0.0056	1-102-126-00
8	1-102-945-00	56	1-101-884-00	390	1-102-822-00	0.0068	1-102-127-00
9	1-102-946-00	62	1-101-886-00	430	1-102-823-00	0.0082	1-102-128-00
10	1-102-947-00	68	1-101-888-00	470	1-102-824-00	0.01	1-102-129-00
11	1-102-948-00	75	1-101-890-00	510	1-101-059-00	0.022	1-101-005-00
12	1-102-949-00	82	1-102-971-00	560	1-102-115-00	0.047	1-101-006-00
13	1-102-950-00	91	1-102-972-00	680	1-102-116-00		
15	1-102-951-00	100	1-102-973-00	820	1-102-117-00		
16	1-102-952-00	110	1-102-815-00				
18	1-102-953-00	120	1-102-816-00				
20	1-102-958-00	130	1-101-081-00				

0.001μF = 1,000pF

CERAMIC (SEMICONDUCTOR) CAPACITORS

RATING → : Use the high voltage rated one.

CAP. (μF)	25 VOLT. PART No.	50 VOLT. PART No.	CAP. (μF)	25 VOLT. PART No.	50 VOLT. PART No.
0.001	→	1-161-039-00	0.018	1-161-016-00	1-161-054-00
0.0012	→	1-161-040-00	0.022	1-161-017-00	1-161-055-00
0.0015		1-161-041-00	0.027	1-161-018-00	1-161-056-00
0.0018		1-161-042-00	0.033	1-161-019-00	1-161-057-00
0.0022		1-161-043-00	0.039	1-161-010-00	1-161-058-00
0.0027	→	1-161-044-00	0.047	1-161-021-00	1-161-059-00
0.0033	→	1-161-045-00	0.056	→	1-161-060-00
0.0039	→	1-161-046-00	0.068	→	1-161-061-00
0.0047	→	1-161-047-00	0.082	1-161-024-00	1-161-062-00
0.0056	→	1-161-048-00	0.1	1-161-025-00	1-161-063-00
0.0068	→	1-161-049-00			
0.0082	1-161-012-00	1-161-050-00			
0.01	1-161-013-00	1-161-051-00			
0.012	→	1-161-052-00			
0.015	1-161-015-00	1-161-053-00			

MYLAR CAPACITORS

CAP. (μF)	RATING 50 VOLT. PART No.	100 VOLT. PART No.	200 VOLT. PART No.	CAP. (μF)	50 VOLT. PART No.	100 VOLT. PART No.	200 VOLT. PART No.	CAP. (μF)	50 VOLT. PART No.	100 VOLT. PART No.	200 VOLT. PART No.
0.001	1-108-227-00	1-108-365-00	1-108-409-00	0.01	1-108-239-00	1-108-377-00	1-108-421-00	0.1	1-108-251-00	1-108-389-00	1-108-433-00
0.0012	1-108-351-00	1-108-366-00	1-108-410-00	0.012	1-108-357-00	1-108-378-00	1-108-422-00	0.12	1-108-363-00	1-108-390-00	1-108-434-00
0.0015	1-108-228-00	1-108-367-00	1-108-411-00	0.015	1-108-240-00	1-108-379-00	1-108-423-00	0.15	1-108-252-00	1-108-391-00	1-108-435-00
0.0018	1-108-352-00	1-108-368-00	1-108-412-00	0.018	1-108-358-00	1-108-380-00	1-108-424-00	0.18	1-108-364-00	1-108-392-00	1-108-436-00
0.0022	1-108-230-00	1-108-369-00	1-108-413-00	0.022	1-108-242-00	1-108-381-00	1-108-425-00	0.22	1-108-254-00	1-108-393-00	1-108-437-00
0.0027	1-108-353-00	1-108-370-00	1-108-414-00	0.027	1-108-359-00	1-108-382-00	1-108-426-00	0.27	1-108-854-00	–	–
0.0033	1-108-232-00	1-108-371-00	1-108-415-00	0.033	1-108-244-00	1-108-383-00	1-108-427-00	0.33	1-108-855-00	–	–
0.0039	1-108-354-00	1-108-372-00	1-108-416-00	0.039	1-108-360-00	1-108-384-00	1-108-428-00	0.39	1-108-856-00	–	–
0.0047	1-108-234-00	1-108-373-00	1-108-417-00	0.047	1-108-246-00	1-108-385-00	1-108-429-00	0.47	1-108-857-00		–
0.0056	1-108-355-00	1-108-374-00	1-108-418-00	0.056	1-108-361-00	1-108-386-00	1-108-430-00				
0.0068	1-108-237-00	1-108-375-00	1-108-419-00	0.068	1-108-249-00	1-108-387-00	1-108-431-00				
0.0082	1-108-356-00	1-108-376-00	1-108-420-00	0.082	1-108-362-00	1-108-388-00	1-108-432-00				

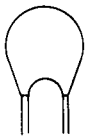

TANTALUM CAPACITORS

RATING → : Use the high voltage rated one.

CAP. (μF)	3.15 VOLT. PART No.	6.3 VOLT. PART No.	10 VOLT. PART No.	16 VOLT. PART No.	20 VOLT. PART No.	25 VOLT. PART No.	35 VOLT. PART No.
0.01					→	→	1-131-396-00
0.015						→	1-131-397-00
0.022						→	1-131-398-00
0.033						→	1-131-399-00
0.047						→	1-131-400-00
0.068					→	→	1-131-401-00
0.1					→	→	1-131-402-00
0.15					→	→	1-131-403-00
0.22					→	→	1-131-404-00
0.33					→	1-131-409-00	1-131-405-00
0.47	–	–	–	–	1-131-412-00	→	1-131-406-00
0.68	–	–	–	1-131-415-00	→	1-131-410-00	1-131-407-00
1.0	–	–	1-131-418-00	–	1-131-413-00	→	1-131-408-00
1.5	–	1-131-421-00	–	1-131-416-00	→	1-131-411-00	1-131-348-00
2.2	1-131-424-00	–	1-131-419-00	–	1-131-414-00	1-131-355-00	1-131-349-00
3.3	–	1-131-422-00	–	1-131-417-00	1-131-362-00	1-131-356-00	1-131-350-00
4.7	1-131-425-00	–	1-131-420-00	1-131-369-00	1-131-363-00	1-131-357-00	1-131-351-00
6.8	–	1-131-423-00	1-131-376-00	1-131-370-00	1-131-364-00	1-131-358-00	1-131-352-00
10	1-131-426-00	1-131-383-00	1-131-377-00	1-131-371-00	1-131-365-00	1-131-359-00	1-131-353-00
15	1-131-390-00	1-131-384-00	1-131-378-00	1-131-372-00	1-131-366-00	1-131-360-00	–
22	1-131-391-00	1-131-385-00	1-131-379-00	1-131-373-00	1-131-367-00		
33	1-131-392-00	1-131-386-00	1-131-380-00	1-131-374-00			
47	1-131-393-00	1-131-387-00	1-131-381-00	–			
68	1-131-394-00	1-131-388-00	–	–			
100	1-131-395-00	–	–	–			

TANTALUM CAPACITORS

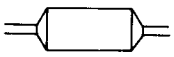

RATING

CAP. (μF)	3 VOLT. PART No.	6.3 VOLT. PART No.	10 VOLT. PART No.	16 VOLT. PART No.	20 VOLT. PART No.	35 VOLT. PART No.
0.033						1-131-273-00
0.047						1-131-274-00
0.068						1-131-275-00
0.1						1-131-276-00
0.15						1-131-277-00
0.22			–	–	1-131-262-00	1-131-278-00
0.33			–	–	1-131-263-00	1-131-279-00
0.47			1-131-169-00	–	1-131-264-00	1-131-280-00
0.68				1-131-258-00	1-131-265-00	1-131-281-00
1.0			1-131-254-00	–	1-131-266-00	1-131-282-00
1.5		1-131-250-00	–	–	1-131-267-00	1-131-283-00
2.2		–	–	1-131-259-00	1-131-268-00	1-131-284-00
3.3		–	1-131-255-00	–	1-131-269-00	–
4.7		1-131-251-00	1-131-171-00	–	1-131-270-00	–
6.8		–	–	1-131-260-00	1-131-271-00	–
10	–	–	1-131-256-00	–	1-131-272-00	–
15	–	1-131-252-00	–	1-131-261-00		
22	–	–	1-131-257-00	–		
33	1-131-176-00	1-131-253-00	1-131-173-00	–		
47	1-131-288-00	1-131-174-00	–	–		
100	1-131-177-00					

1/4 WATT CARBON RESISTORS

Ω	Part No.	Ω	Part No.	Ω	Part No.	Ω	Part No.	Ω	Part No.	Ω	Part No.	Ω	Part No.
1.0	1-246-401-00	10	1-246-425-00	100	1-246-449-00	1.0k	1-246-473-00	10k	1-246-497-00	100k	1-246-521-00	1.0M	1-246-545-00
1.1	1-246-402-00	11	1-246-426-00	110	1-246-450-00	1.1k	1-246-474-00	11k	1-246-498-00	110k	1-246-522-00	1.1M	1-210-814-00
1.2	1-246-403-00	12	1-246-427-00	120	1-246-451-00	1.2k	1-246-475-00	12k	1-246-499-00	120k	1-246-523-00	1.2M	1-210-815-00
1.3	1-246-404-00	13	1-246-428-00	130	1-246-452-00	1.3k	1-246-476-00	13k	1-246-500-00	130k	1-246-524-00	1.3M	1-210-816-00
1.5	1-246-405-00	15	1-246-429-00	150	1-246-453-00	1.5k	1-246-477-00	15k	1-246-501-00	150k	1-246-525-00	1.5M	1-210-817-00
1.6	1-246-406-00	16	1-246-430-00	160	1-246-454-00	1.6k	1-246-478-00	16k	1-246-502-00	160k	1-246-526-00	1.6M	1-210-818-00
1.8	1-246-407-00	18	1-246-431-00	180	1-246-455-00	1.8k	1-246-479-00	18k	1-246-503-00	180k	1-246-527-00	1.8M	1-210-819-00
2.0	1-246-408-00	20	1-246-432-00	200	1-246-456-00	2.0k	1-246-480-00	20k	1-246-504-00	200k	1-246-528-00	2.0M	1-210-820-00
2.2	1-246-409-00	22	1-246-433-00	220	1-246-457-00	2.2k	1-246-481-00	22k	1-246-505-00	220k	1-246-529-00	2.2M	1-210-821-00
2.4	1-246-410-00	24	1-246-434-00	240	1-246-458-00	2.4k	1-246-482-00	24k	1-246-506-00	240k	1-246-530-00	2.4M	1-244-754-00
2.7	1-246-411-00	27	1-246-435-00	270	1-246-459-00	2.7k	1-246-483-00	27k	1-246-507-00	270k	1-246-531-00	2.7M	1-244-755-00
3.0	1-246-412-00	30	1-246-436-00	300	1-246-460-00	3.0k	1-246-484-00	30k	1-246-508-00	300k	1-246-532-00	3.0M	1-244-756-00
3.3	1-246-413-00	33	1-246-437-00	330	1-246-461-00	3.3k	1-246-485-00	33k	1-246-509-00	330k	1-246-533-00	3.3M	1-244-757-00
3.6	1-246-414-00	36	1-246-438-00	360	1-246-462-00	3.6k	1-246-486-00	36k	1-246-510-00	360k	1-246-534-00	3.6M	1-244-758-00
3.9	1-246-415-00	39	1-246-439-00	390	1-246-463-00	3.9k	1-246-487-00	39k	1-246-511-00	390k	1-246-535-00	3.9M	1-244-759-00
4.3	1-246-416-00	43	1-246-440-00	430	1-246-464-00	4.3k	1-246-488-00	43k	1-246-512-00	430k	1-246-536-00	4.3M	1-244-760-00
4.7	1-246-417-00	47	1-246-441-00	470	1-246-465-00	4.7k	1-246-489-00	47k	1-246-513-00	470k	1-246-537-00	4.7M	1-244-761-00
5.1	1-246-418-00	51	1-246-442-00	510	1-246-466-00	5.1k	1-246-490-00	51k	1-246-514-00	510k	1-246-538-00	5.1M	1-244-762-00
5.6	1-246-419-00	56	1-246-443-00	560	1-246-467-00	5.6k	1-246-491-00	56k	1-246-515-00	560k	1-246-539-00		
6.2	1-246-420-00	62	1-246-444-00	620	1-246-468-00	6.2k	1-246-492-00	62k	1-246-516-00	620k	1-246-540-00		
6.8	1-246-421-00	68	1-246-445-00	680	1-246-469-00	6.8k	1-246-493-00	68k	1-246-517-00	680k	1-246-541-00		
7.5	1-246-422-00	75	1-246-446-00	750	1-246-470-00	7.5k	1-246-494-00	75k	1-246-518-00	750k	1-246-542-00		
8.2	1-246-423-00	82	1-246-447-00	820	1-246-471-00	8.2k	1-246-495-00	82k	1-246-519-00	820k	1-246-543-00		
9.1	1-246-424-00	91	1-246-448-00	910	1-246-472-00	9.1k	1-246-496-00	91k	1-246-520-00	910k	1-246-544-00		

HARDWARE NOMENCLATURE

Screw:

P 3 x 10

- *L: Length in mm*
- *D: Diameter in mm*
- *Type of head*
- *Indicated slotted-head only. Unless otherwise indicated, it means cross-recessed head (Phillips type).*

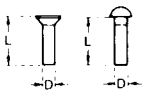

Nut, Washer, Retaining ring:

N 3

- *Diameter of usable screw or shaft*
- *Reference designation*

Reference Designation	Shape	Description	Remarks
		SCREWS	
P		pan-head screw	binding-head (B) screw for replacement
PWH		pan-head screw with washer face	binding-head (B) screw and flat washer for replacement
PS PSP		pan-head screw with spring washer	binding-head (B) screw and spring washer for replacement
PSW PSPW		pan-head screw with spring and flat washers	binding-head (B) screw and spring and flat washers for replacement
R		round-head screw	binding-head (B) screw for replacement
K		flat-countersunk-head screw	
RK		oval-countersunk-head screw	
B		binding-head screw	
T		truss-head screw	binding-head (B) screw for replacement
F		flat-fillister-head screw	
RF		fillister-head screw	
BV		brazier-head screw	

Reference Designation	Shape	Description	Remarks
		SELF-TAPPING SCREWS	
TA		self-tapping screw	ex: TA, P 3 x 10
PTP		pan-head self-tapping screw	binding-head self-tapping (TA, B) screw for replacement
PTPWH		pan-head self-tapping screw with washer face	binding-head self tapping (TA, B) screw and flat washer for replacement
PTTWH		pan-head thread-rolling screw with washer face	binding-head (B) screw and flat washer for replacement
		SET SCREWS	
SC		set screw	
SC		hexagon-socket set screw	ex: SC 2.6 x 4, hexagon socket
		NUT	
N		nut	
		WASHERS	
W		flat washer	
SW		spring washer	
LW		internal-tooth lock washer	ex: LW3, internal
LW		external-tooth lock washer	ex: LW3, external
		RETAINING RINGS	
E		retaining ring	
G		grip-type retaining ring	

TROUBLE CHECKS

OFF-THE-AIR PROGRAMS

STEREO indicator does not light when receiving stereo programs.
- Adjust the antenna.
- Press the FM MODE switch.

STEREO indicator flickers.
- Adjust the antenna or connect an external FM antenna.
- Press the FM MODE switch to disengage the stereo mode.

The function/frequency display figures do not stop at the desired station during automatic tuning.
- The signal strength is too weak for automatic tuning.

Adjust the antenna for optimum reception or tune in the station with the direct access tuning system.

Tuning cannot be done correctly when the station preset button is pressed.
- Memorize the frequency correctly.
- Install or replace with new batteries for memory back-up.

Incorrect figure appear on the function/frequency display window.
- Install the batteries again. (Page 10)

Severe hum or noise
- Use shielded connecting cords.
- Ground the receiver.
- Avoid long horizontal runs of antenna lead.
- Keep connecting cords (or antenna lead-in) away from transformers or motors, and at least 3 meters (10 feet) from TV sets and fluorescent lights.
- Adjust the antenna.
- Keep the speaker cords, connecting cords and power cords from the ferrite-bar antenna at the rear.

Ignition noise
- Install the outdoor antenna away from heavy traffic.
- Use a shielded or coaxial lead-in for the antenna.

Electrostatic charge.
- Ground the receiver.

GENERAL

No audio
- Check speaker and program source connections.
- Check the settings of the TAPE MONITOR switches.
- Check the SPEAKERS switches setting.
- Turn up the volume.

No audio from one channel or unbalanced left and right volume
- Adjust the BALANCE control.
- Check the speaker and input connections of the inoperative channel.

Abrupt loss of sound from one or both of the speakers*
- Check the speaker terminals or speaker cord for a short.
- Remove any object on the top of the cabinet which might prevent normal air circulation.

Reversed left and right sound
- Check the speaker cord connection and speaker location.

Lack of bass sound or obscure instrument position
- Check the speaker connection for proper phasing.

Severe hum or noise
- Use shielded connecting cords.
- Keep the connecting cords away from transformers or motors and at least 3 meters (10 feet) from TV sets and fluorescent lights.
- Ground the receiver.

Rustling noise
- Make secure connections.
- Wipe the plugs and jacks with a cloth lightly dampened with methanol.

*This symptom may be caused when the protection circuits activate.

Sony Corporation
Audio & Video Group © 1982

9-950-968-11

English
82G0655-1
Printed in Japan