Clarion

Clarion Co., Ltd.
5-35-2, Hakusan, Bunkyouku, Tokyo, 112-8608 Japan
Service Dept.- 50 kamitoda,Toda-shi,Saitama,335-8511 Japan Tel: 048-443-1111 FAX:048-433-6996

Published by Service Dept.
298-5995-00 Aug.2002 P
Printed in Japan

Service Manual

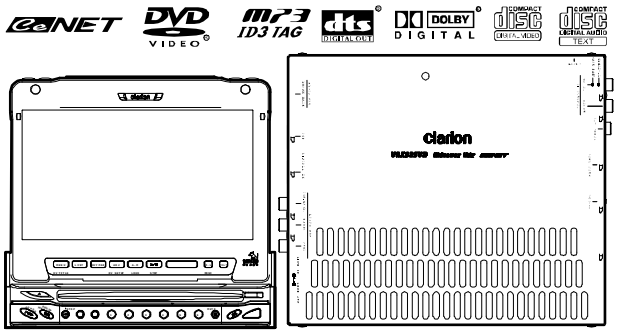

AM/FM DVD Video/Video CD/CD/
MP3 Player/CD Changer Controller
with 7" LC Display

Model ***VRX925VD***

(QC-6810B-B)
(for U.S.A./ Region No. "1")

(QC-6810K-B)
(for ASIA / Region No. "3")

(QC-6810K-C)
(for OCEANIA / Region No. "4")

SPECIFICATIONS

FM tuner section

Frequency range:	87.9MHz to 107.9MHz(U.S.A.) 87.50MHz to 108.0MHz(ASIA/OCEANIA)
Usable sensitivity:	9dBf
50dB quieting sensitivity:	15dBf
Alternate channel selectivity:	70dB
Stereo separation:	35dB(1kHz)
Frequency response:	30Hz to 15kHz(+3/-3dB)

AM tuner section

Frequency range:	530kHz to 1710kHz(U.S.A.) 531kHz to 1629kHz(ASIA/OCEANIA)
Usable sensitivity:	25uV

DVD player section

System:	Digital versatile disc system with CDDA capable
Usable discs:	DVD video disc,Compact disc
Frequency response:	20Hz to 22kHz(48kHz)(+1/-1dB)
Signal to noise ratio:	100dB(1kHz)IHF-A
Dynamic range:	100dB(1kHz)
Distortion:	0.01%

Audio amplifier section

Rated power output:	18W x 4(20Hz to 20kHz,1%,4 ohm)
Maximum power output:	200W(50W x 4 JEITA)
Speaker impedance:	4 ohm(4 to 8 ohm)

Input section

Video input:	1.0V+0.2/-0.2Vp-p (input impedance 75 ohm)
Audio input:	130mV+60/-60mVrms(High) 600mV+80/-80mVrms(Mid) 840mV+100/-100mVrms(Low) (input impedance 10k ohm or greater)

Video output section

Video output:	1.0V+0.2/-0.2Vp-p(output impedance 75 ohm)

LCD monitor section

Screen size:	7-inch wide type (152mm Width x 85mm Height)
Display method:	Transmission type TN Liquid Crystal Display
Drive method:	TFT(thin-film transistor) active matrix driving
Pixels:	336,960(1440x234)

General

Power source voltage:	14.4V DC (10.8 to 15.6V allowable)
Ground:	Negative
Current consumption:	4.0A(1W)
Auto antenna rated current:	500mA less
Dimensions(mm):	Main unit 178(W)x50(H)x165(D) Tuner amp unit 178(W)x37.5(H)x209.5(D) Remote control unit 54(W)x28.8(H)x155(D)
Weight:	Main unit 2.3kg Tuner amp unit 1.1kg Remote control unit 70g (including battery)

* Manufactured under license from Dolby Laboratories. "Dolby" and the double-D symbol are trademarks of Dolby Laboratories.Confidential Unpublished Works.c 1992-1997 Dolby Laboratories.All rights reserved.
* "DTS" are registered trademarks of Digital Theater Systems,Inc.
* Specifications and design are subject to change without notice for further improvement.

NOTES

* Use a CeNET extension cable that is less than 20m in length.(including the Y-adapter CCA-519)
* We cannot supply PWB with component parts in principle. When a circuit on PWB has failure , please repair it by component parts base. Parts which are not mentioned in service manual are not supplied.
* This DVD player ca play the following discs.
  DVD video discs,Video CDs,CD text,Audio CDs.
* This DVD video player cannot playback DVD-R,DVD-RAM,DVD-ROM,CD-ROM,CD-RW,Photo CDs.
* This DVD player plays NTSC discs and PAL discs only and cannot be used for playback of SECAM discs.
* Some CDs recorded in CD-R mode may not be usable.
* This slide mechanism is used the special adjustment jig for repair.

COMPONENTS

QC-6810B-B/QC-6810K-B/K-C

Main unit	----------	1
Remote control unit	RCB-161-200	1
Battery(SUM-3)	----------	2
Universal mounting bracket	300-9035-01	1
DCP case	335-6707-00	1
Antenna jumper	093-1465-03	1
Power supply lead(18P)	854-6392-50	1
Power supply lead(2P)	854-6393-51	1
Extension lead(20P to 20P)	855-0553-00	1
Outer escutcheon	940-7715-05	1
Parts bag	----------	
Electro tap	060-0018-00	1
Machine screw(M4×3)	714-4003-87	4
Machine screw(M5×8)	714-5008-41	4
Sems hex. bolt(M5×8)	716-0496-01	5
Parts bag	----------	
Hook plate	330-8216-01	2
Cord clamp	335-0833-01	1
Spacer	345-3653-01	1
Screw	716-0726-01	1
Parts bag	----------	
Mounting bracket	300-7362-20	2
Canoe clip	335-2515-00	4
Machine screw(M4×8)	714-4008-80	4
Parts bag	----------	
DCP lock spacer	345-5174-00	1

CAUTIONS

Use of controls,adjustment or performance of procedures other than those specified herein,may result in hazardous radiation exposure.
The COMPACT DISC player and MINI DISC player should not be adjusted or repaired by anyone except properly qualified service personnel.

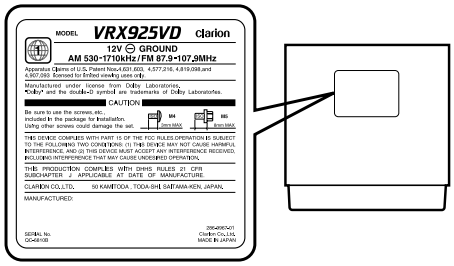

To engineers in charge of repair or inspection of our products.

Before repair or inspection, make sure to follow the instructions so that customers and Engineers in charge of repair or inspection can avoid suffering any risk or injury.

1. Use specified parts.
   The system uses parts with special safety features against fire and voltage. Use only parts with equivalent characteristics when replacing them.
   The use of unspecified parts shall be regarded as remodeling for which we shall not be liable. The onus of product liability (PL) shall not be our responsibility in cases where an accident or failure is as a result of unspecified parts being used.
2. Place the parts and wiring back in their original positions after replacement or re-wiring.
   For proper circuit construction, use of insulation tubes, bonding, gaps to PWB, etc, is involved. The wiring connection and routing to the PWB are specially planned using clamps to keep away from heated and high voltage parts. Ensure that they are placed back in their original positions after repair or inspection.
   If extended damage is caused due to negligence during repair, the legal responsibility shall be with the repairing company.
3. Check for safety after repair.
   Check that the screws, parts and wires are put back securely in their original position after repair. Ensure for safety reasons there is no possibility of secondary ploblems around the repaired spots.
   If extended damage is caused due to negligence of repair, the legal responsibility shall be with the repairing company.
4. Caution in removal and making wiring connection to the parts for the automobile.
   Disconnect the battery terminal after turning the ignition key off. If wrong wiring connections are made with the battery connected, a short circuit and/or fire may occur.
   If extensive damage is caused due to negligence of repair, the legal responsibility shall be with the repairing company.
5. Cautions regarding chips.

Do not reuse removed chips even when no abnormality is observed in their appearance. Always replace them with new ones. (The chip parts include resistors, capacitors, diodes, transistors, etc). The negative pole of tantalum capacitors is highly susceptible to heat, so use special care when replacing them and check the operation afterwards.

6. Cautions in handling flexible PWB
   Before working with a soldering iron, make sure that the iron tip temperature is around 270℃. Take care not to apply the iron tip repeatedly(more than three times)to the same patterns. Also take care not to apply the tip with force.
7. Turn the unit OFF during disassembly and parts replacement. Recheck all work before you apply power to the unit.
8. Cautions in checking that the optical pickup lights up.
   The laser is focused on the disc reflection surface through the lens of the optical pickup. When checking that the laser optical diode lights up, keep your eyes more than 30cms away from the lens. Prolonged viewing of the laser within 30cms may damage your eyesight.
9. Cautions in handling the optical pickup
   The laser diode of the optical pickup can be damaged by electrostatic charge caused by your clothes and body. Make sure to avoid electrostatic charges on your clothes or body, or discharge static electricity before handling the optical pickup.

9-1. Laser diode
The laser diode terminals are shorted for transportation in order to prevent electrostatic damage. After replacement, open the shorted circuit. When removing the pickup from the mechanism, short the terminals by soldering them to prevent this damage.

9-2. Actuator
The actuator has a powerful magnetic circuit. If a magnetic material is put close to it. Its characteristics will change. Ensure that no foreign substances enter through the ventilation slots in the cover.

9-3. Cleaning the lens
Dust on the optical lens affects performance. To clean the lens, apply a small amount of isopropyl alcohol to lens paper and wipe the lens gently.

SYSTEM CHECK

* The confirmation of connected equipment must be performed for this unit only when the wiring connection is complete and power is turned on to the unit first.When the power is supplied,"PUSH PWR" appear in the display.Press the FUNC button,the system check starts inside the unit.When "COMPLETE" and "PUSH PWR" appear alternately, press once again the FUNC button.

ERROR DISPLAYS

If an error occurs,one of the following displays is displayed.Take the measures described below to eliminate the problem.

	Error display	Cause	Measure
DVD player	ERROR 2	A DVD is caught inside the DVD deck and is not ejected.	This is a failure of DVD deck's mechanism.
	ERROR 3	A DVD cannot be played due to scratches,etc.	Replace with a non-scratched,non-warped disc.
	ERROR 6	A DVD is loaded upside-down inside the DVD deck and does not play.	Eject the disc then reload it properly.
CD changer	ERROR 2	A CD inside the CD changer is not loaded.	This is a failure of CD changer's mechanism.
	ERROR 3	A CD inside the CD changer cannot be played due to scratches,etc.	Replace with a non-scratched,non-warped disc.
	ERROR 6	A CD inside the CD changer cannot be played because it is loaded upside-down.	Eject the disc then reload it properly.
MD changer	ERROR H	Displayed when the temperature in the MD changer is too high and playback has been stopped automatically.	Lower the surrounding temperature and wait for a while to cool off MD changer.
	EEROR 2	An MD inside the MD changer is not loaded.	This is a failure of MD changer's mechanism.
	ERROR 3	An MD inside the MD changer cannot be played due to scratches,etc.	Replace with a non-scratched,non-warped disc.
	ERROR 6	An MD inside the MD changer cannot be played because it is loaded upside-down.	Eject the disc then reload it properly.
		Displayed when a non-recorded MD is loaded in the MD changer.	Load a pre-recorded MD in the MD changer.

Note:If an error display other than the ones described above appears, press the reset button.
* When the reset button is pressed,frequencies of TV/radio stations,titles,etc. stored in memory are cleared.

TROUBLESHOOTING

Problem	Cause	Measure
Nothing happens when buttons are pressd. Display is not accurate.	The microprocessor has malfunction due to noise,etc.	Turn off the power,then press the RELEASE lever and remove the DCP.Press the Reset button both of tuner amp unit and main unit for about 2 seconds with a thin rod.When the reset button is pressed,turn off the ACC power.

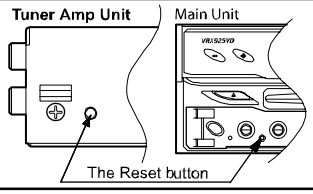

CLOCK ADJUSTMENT

1. When the panel is open,press the [ADJ] button to select the ADJUST MOD menu.
2. Touch the [down] key to select "CLOCK".Touch the [CLOCK] key to adjust the time.
3. Touch the [up],[down],[a.m] or [p.m] key to adjust the time.
   *The time is displayed in 12-hour format.
4. Press the [ADJ] button again or touch the [RTN] key two times.The unit returns to the previous mode.

CHANGING THE RECEPTION AREA

This unit is initially set to USA(set to outside USA) frequency intervals of 10kHz(9kHz) for AM and 200kHz(50kHz) for FM. When using it outside the USA(in the USA),the frequency reception range can be switched to the intervals below.
NOTE:( )ASIA/OCEANIA

SETTING THE RECEPTION AREA
While pressing [DISP] button, each time you press and hold the number "6" of the [DIRECT] buttons for 2 seconds or longer, the reception area switches from inside the USA to outside the USA or from outside the USA to inside the USA.

* Any station preset memories are lost when the reception area is changed.

BLOCK DIAGRAM

DVD mechanism section

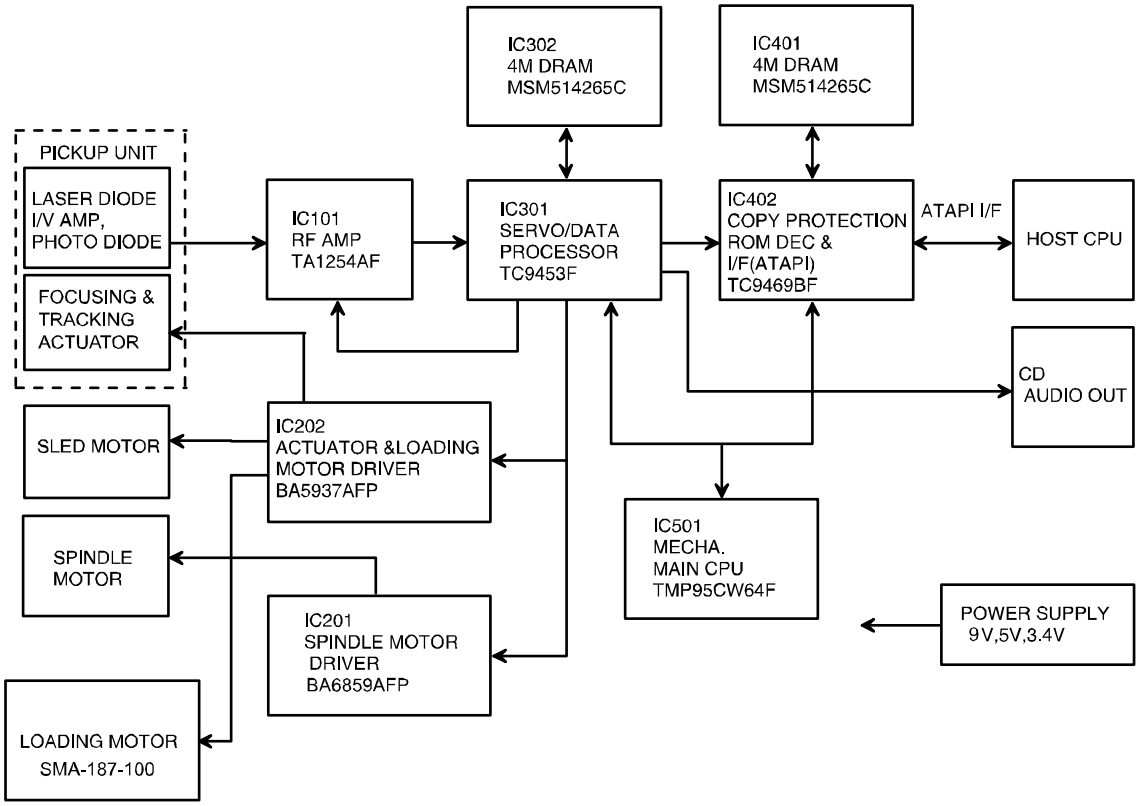

Tuner amp unit section

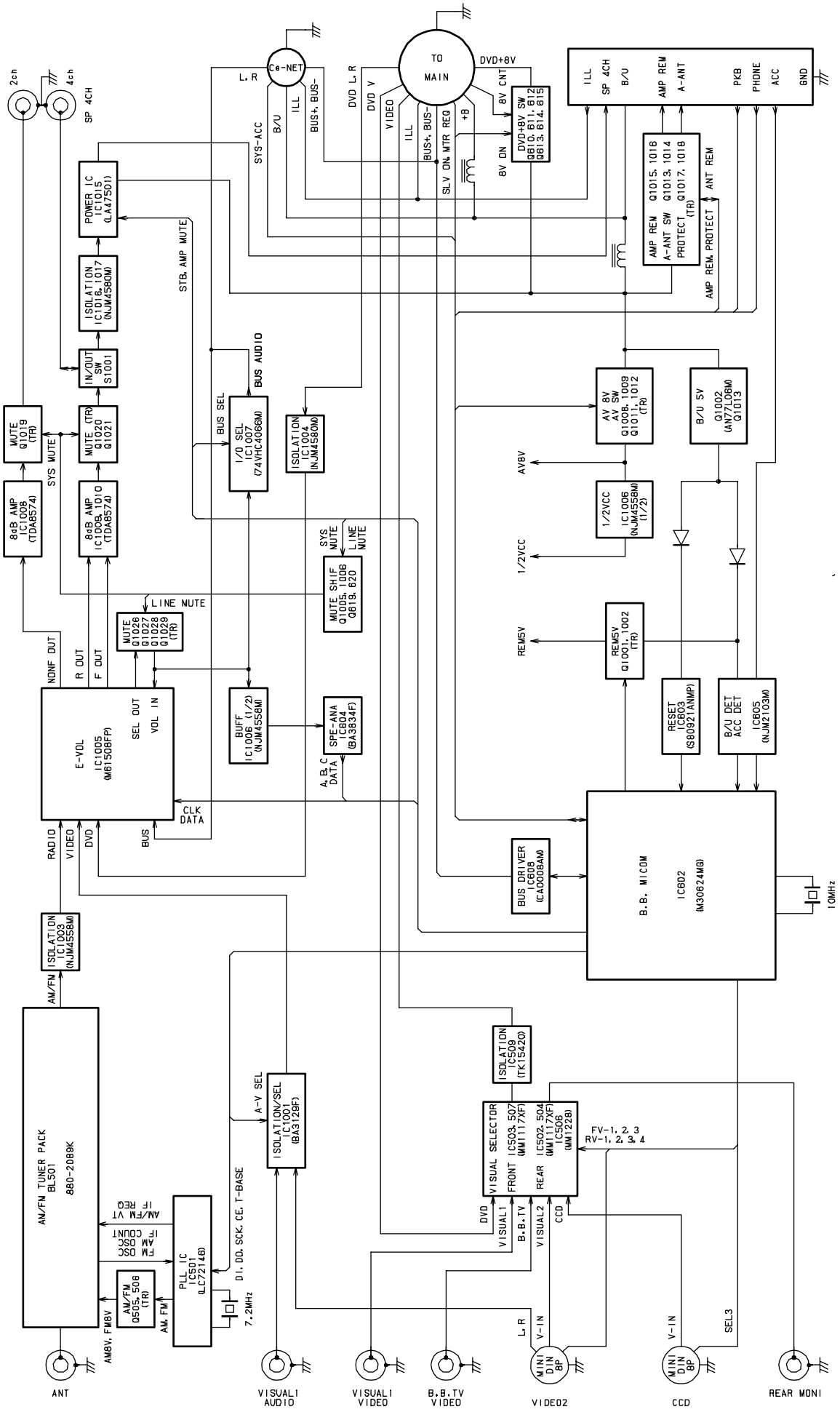

Main unit section

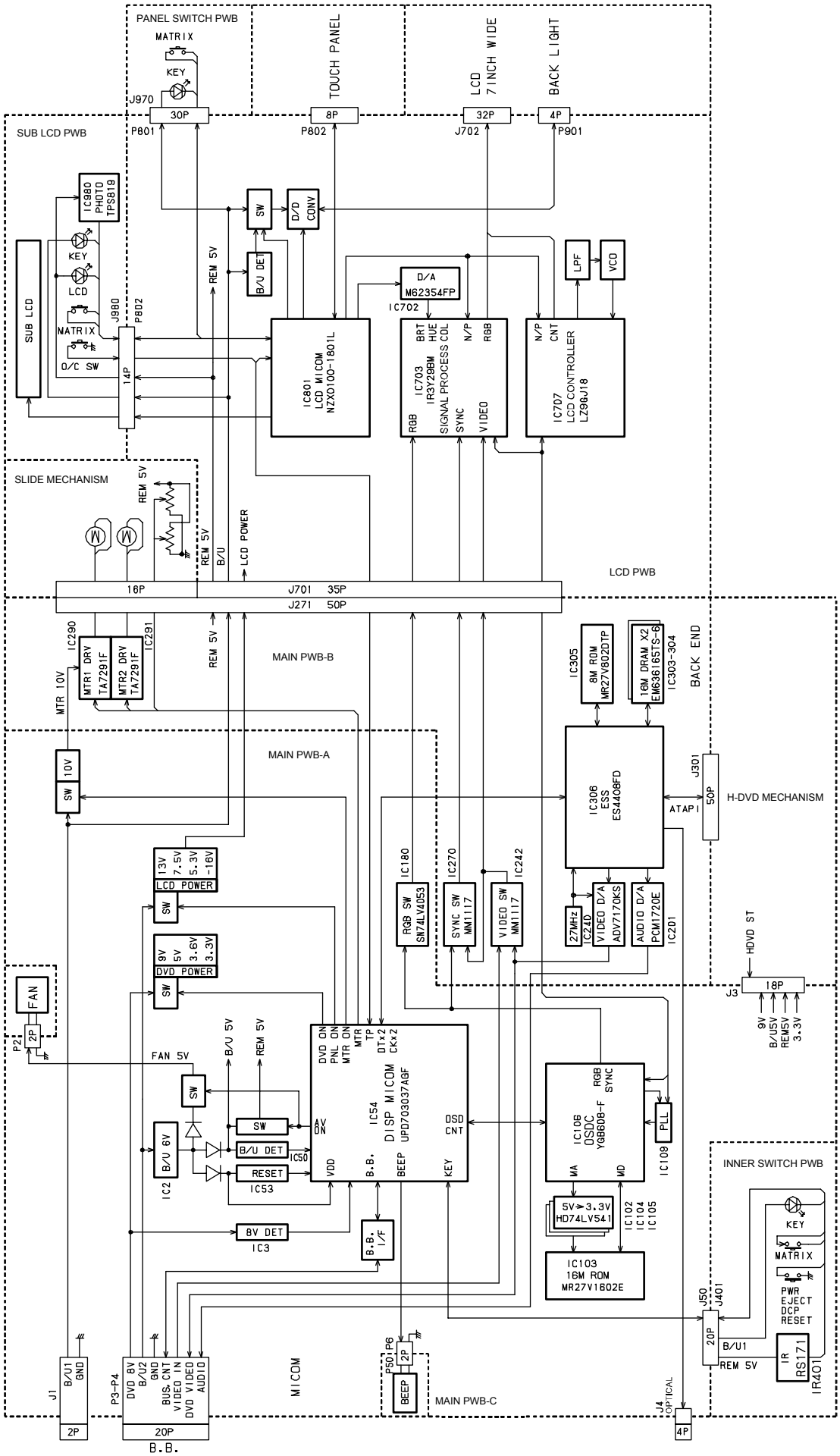

ADJUSTMENTS

Main unit section

DC-DC converter output voltage / PLL output voltage adjustment

Condition:

Function : VISUAL mode

Tuner amp unit : Input NTSC color bar video signal

1. Adjust VR150 so that the voltage of TP152 is 5.35V(+0.02V/-0.02V).
2. Adjust VR101 so that the voltage of TP105 is 1.6V(+0.1V/-0.1V).

LCD PWB section

Power supply voltage confirmation

1. Make sure the voltage has become the following value at each test point.
   TP708 : 5.3V(+0.5V/-0.5V)
   TP709 : 7.5V(+0.5V/-0.5V)
   TP710 : 13.0V(+0.5V/-0.5V)
   TP707 : -16.0V(+0.5V/-0.5V)

PLL adjustment

1. TP717 connect to GND. Confirm that the TP716 voltage is 2.65V(+0.1V/-0.1V).
2. Adjust VR707 so that the frequency of TP718 is 15.734kHz(+50Hz/-50Hz).

Screen position adjustment

1. Adjust VR708 so that the pulse width of TP718 is 4.6u sec(+0.1u sec./-0.1u sec.).

Voltage confirmation of J702 connector

VGH(pin32) : 13.0V(+0.5V/-0.5V)
VCC(pin24) : -11.0V(+0.5V/-0.5V)
VGL(pin18) : -8.4V(+0.5V/-0.5V)
VSH(pin1,pin3) : 5.3V(+0.5V/-0.5V)

VIDEO signal adjustment

(step 1 to 7 :NTSC, step 8 :PAL)

Input the visual signal(10step wave,monochrome,APL=50%, 1.0Vp-p)to the VIDEO input.

1. BRIGHT voltage confirmation
   Make sure the voltage of TP701 is 2.00V(+0.1V/-0.1V).
2. GAMMA 0 voltage confirmation
   Make sure the voltage of TP705 is 1.95V(+0.1V/-0.1V).
3. GAMMA 2 voltage confirmation
   Make sure the voltage of TP706 is 2.15V(+0.1V/-0.1V).
4. RGB-AMP/CONT-G adjustment
   Adjust VR705(RGB AMP) so that VBB voltage of TP712 is 4.0V(+0.05V/-0.05V).
   Adjust VR701(CONT) so that VBW voltage of TP712 is 3.8V(+0.05V/-0.05V).
5. BRT-R Adjustment
   Adjust VR703(BRT-R) so that VBB voltage of TP713 is 4.0V(+0.05V/-0.05V).
6. BRT-B Adjustment
   Adjust VR704(BRT-B) so that VBB voltage of TP711 is 4.0V(+0.05V/-0.05V).
7. COM-AMP adjustment
   Adjust VR702(COM-AMP) so that the amplitude of TP714 is 8.0V(+0.1V/-0.1V p-p).
8. Burst cleaning adjustment
   Input a color bar signal.(PAL)
   Adjust L702 so that the wave form of TP711 is in focus.

VCOM DC bias adjustment

1. Adjust VR706(VCOM DC) to obtain the optimum contrast(CINEMA MODE).

Voltage/frequency confirmation of inverter section

TP901 : 5.0V(+0.5V/-0.5V)
TP902 : 53kHz(+5kHz/-5kHz)

EXPLANATION OF IC

051-6441-00 ES4408 DVD Processor

1.Terminal Description

pin 1:	VCC	: - :	Positive supply voltage.
pin 2:	LA 4	: O :	Device address output.
pin 3:	LA 5	: O :	Device address output.
pin 4:	LA 6	: O :	Device address output.
pin 5:	LA 7	: O :	Device address output.
pin 6:	LA 8	: O :	Device address output.
pin 7:	LA 9	: O :	Device address output.
pin 8:	VSS	: - :	Negative supply voltage.
pin 9:	VCC	: - :	Positive supply voltage.
pin 10:	LA 10	: O :	Device address output.
pin 11:	LA 11	: O :	Device address output.
pin 12:	LA 12	: O :	Device address output.
pin 13:	LA 13	: O :	Device address output.
pin 14:	LA 14	: O :	Device address output.
pin 15:	LA 15	: O :	Device address output.
pin 16:	LA 16	: O :	Device address output.
pin 17:	VSS	: - :	Negative supply voltage.
pin 18:	VCC	: - :	Positive supply voltage.
pin 19:	LA 17	: O :	Device address output.
pin 20:	LA 18	: O :	Device address output.
pin 21:	LA 19	: O :	Device address output.
pin 22:	LA 20	: O :	Device address output.
pin 23:	LA 21	: O :	Device address output.
pin 24:	RESET	: IN :	Reset signal input.
pin 25:	TDM DX/RSEL	:I/O:	TDM transmit data output. ROM select input.
pin 26:	VSS	: - :	Negative supply voltage.
pin 27:	VCC	: - :	Positive supply voltage.
pin 28:	TDM DR	: IN :	TDM receive data input.
pin 29:	TDM CLK	: IN :	TDM clock pulse input.
pin 30:	TDM FS	: IN :	TDM frame cynch.
pin 31:	TDM TSC	: O :	TDM output enable.
pin 32:	TWS/SEL PLL1	:I/O:	Audio transmit frame synchronous pulse output. Select PLL input.
pin 33:	TSD0/SEL PLL0	:I/O:	Audio transmit serial data output. Select PLL input.
pin 34:	VSS	: - :	Negative supply voltage.
pin 35:	VCC	: - :	Positive supply voltage.
pin 36:	TSD1/SEL PLL1	:I/O:	Audio transmit serial data output. Select PLL input.
pin 37:	TSD 2	: O :	Audio transmit serial data output.
pin 38:	TSD 3	: O :	Audio transmit serial data output.
pin 39:	M CLK	: O :	The clock puse output to the CD IC.
pin 40:	TB CK	:I/O:	Audio transmit bit clock.
pin 41:	SPDIF DOBM	: O :	S/PDIF format output.
pin 42:	NU	: - :	Not in use.
pin 43:	VSS	: - :	Negative supply voltage.
pin 44:	VCC	: - :	Positive supply voltage.
pin 45:	RSD	: IN :	Audio receive serial data.
pin 46:	RWS	: IN :	Audio receive frame synch.
pin 47:	RBCK	: IN :	Audio receive bit clock.
pin 48:	A PLL CAP	: IN :	Analog PLL capacitor.
pin 49:	X IN	: IN :	Crystal connection.
pin 50:	X OUT	: O :	Crystal connection.
pin 51:	VCC	: - :	Positive supply voltage.
pin 52:	VSS	: - :	Negative supply voltage.
pin 53:	DMA 0	: O :	DRAM address output.
pin 54:	DMA 1	: O :	DRAM address output.

pin 55: DMA 2 : O : DRAM address output.
pin 56: DMA 3 : O : DRAM address output.
pin 57: DMA 4 : O : DRAM address output.
pin 58: DMA 5 : O : DRAM address output.
pin 59: VCC : - : Positive supply voltage.
pin 60: VSS : - : Negative supply voltage.
pin 61: DMA 6 : O : DRAM address output.
pin 62: DMA 7 : O : DRAM address output.
pin 63: DMA 8 : O : DRAM address output.
pin 64: DMA 9 : O : DRAM address output.
pin 65: DMA 10 : O : DRAM address output.
pin 66: DMA 11 : O : DRAM address output.
pin 67: VSS : - : Negative supply voltage.
pin 68: VCC : - : Positive supply voltage.
pin 69: DCAS : O : Column address strobe.
pin 70: DOE/DSCK EN :I/O: Output enable out. Clock enable in.
pin 71: DWE : O : DRAM write enable output.
pin 72: DRAS 0 : O : Raw address strobe output.
pin 73: DRAS 1 : O : Raw address strobe output.
pin 74: DRAS 2 : O : Raw address strobe output.
pin 75: VCC : - : Positive supply voltage.
pin 76: VSS : - : Negative supply voltage.
pin 77: DB 0 :I/O: DRAM data input/output.
pin 78: DB 1 :I/O: DRAM data input/output.
pin 79: DB 2 :I/O: DRAM data input/output.
pin 80: DB 3 :I/O: DRAM data input/output.
pin 81: DB 4 :I/O: Test mode LCD driver control DB.
pin 82: DB 5 :I/O: Test mode LCD driver control DB.
pin 83: VCC : - : Positive supply voltage.
pin 84: VSS : - : Negative supply voltage.
pin 85: DB 6 :I/O: Test mode LCD driver control DB.
pin 86: DB 7 :I/O: Test mode LCD driver control DB.
pin 87: DB 8 :I/O: DRAM data input/output.
pin 88: DB 9 :I/O: DRAM data input/output.
pin 89: DB 10 :I/O: DRAM data input/output.
pin 90: DB 11 :I/O: DRAM data input/output.
pin 91: VSS : - : Negative supply voltage.
pin 92: VCC : - : Positive supply voltage.
pin 93: DB 12 :I/O: DRAM data input/output.
pin 94: DB 13 :I/O: DRAM data input/output.
pin 95: DB 14 :I/O: DRAM data input/output.
pin 96: DB 15 :I/O: DRAM data input/output.
pin 97: DCS 1 : O : SDRAM chip select output.
pin 98: VSS : - : Negative supply voltage.
pin 99: VCC : - : Positive supply voltage.
pin100: DCS 0 : O : SDRAM chip select output.
pin101: DQM : O : Data input/output mask.
pin102: DSCK : O : Clock to SDRAM.
pin103: VSS : - : Negative supply voltage.
pin104: VCC : - : Positive supply voltage.
pin105: D Clock : O : BRI,COL,HUE setting signal output for the LCD.
pin106: YUV 0 : O : 8-bit YUV output.
pin107: YUV 1 : O : 8-bit YUV output.
pin108: YUV 2 : O : 8-bit YUV output.
pin109: YUV 3 : O : 8-bit YUV output.
pin110: YUV 4 : O : 8-bit YUV output.
pin111: VCC : - : Positive supply voltage.
pin112: VSS : - : Negative supply voltage.
pin113: YUV 5 : O : 8-bit YUV output.
pin114: YUV 6 : O : 8-bit YUV output.
pin115: YUV 7 : O : 8-bit YUV output.
pin116: P CLK 2X SCN :I/O: 2x pixel clock.
pin117: P CLK Q SCN :I/O: Pixel clock.
pin118: VSYNCH :I/O: Vertical synch for screen video interface, programmable for rising or falling edge.
pin119: HSYNCH :I/O: Horizontal synch for screen video interface, programmable for rising or falling edge.
pin120: VSS : - : Negative supply voltage.
pin121: VCC : - : Positive supply voltage.
pin122: HD 0/DCI 0 :I/O: Host data & DCI data input/output.
pin123: HD 1/DCI 1 :I/O: Host data & DCI data input/output.
pin124: HD 2/DCI 2 :I/O: Host data & DCI data input/output.
pin125: HD 3/DCI 3 :I/O: Host data & DCI data input/output.
pin126: HD 4/DCI 4 :I/O: Host data & DCI data input/output.
pin127: HD 5/DCI 5 :I/O: Host data & DCI data input/output.
pin128: HD 6/DCI 6 :I/O: Host data & DCI data input/output.
pin129: VSS : - : Negative supply voltage.
pin130: VCC : - : Positive supply voltage.
pin131: HD 7/DCI 7 :I/O: Host data & DCI data input/output.
pin132: HD 8/DCI FDS :I/O: Host data input/output & DCI FDS.
pin133: HD 9 :I/O: Host data input/output.
pin134: HD 10 :I/O: Host data input/output.
pin135: HD 11 :I/O: Host data input/output.
pin136: HD 12 :I/O: Host data input/output.
pin137: HD 13 :I/O: Host data input/output.
pin138: VSS : - : Negative supply voltage.
pin139: VCC : - : Positive supply voltage.
pin140: HD 14 :I/O: Host data input/output.
pin141: HD 15 :I/O: Host data input/output.
pin142: HWRQ : O : Host write request.
pin143: HRDQ : O : Host read request.
pin144: HIRQ/DCI ERR :I/O: Host interrupt.
pin145: HRST : O : Host reset.
pin146: HIORDI : I : Host I/O ready.
pin147: VSS : - : Negative supply voltage.
pin148: VCC : - : Positive supply voltage.
pin149: HWR :I/O: Host write signal input / DCI interface acknowledge signal output.
pin150: HRD : O : Host read signal output / DCI interface clock output.
pin151: HIOCS16 : IN : Device 16-bit data transfer.
pin152: HCS1FX : O : Host select 1.
pin153: HCS3FX : O : Host select 3.
pin154: HA 0 :I/O: Host address bus.
pin155: HA 1 :I/O: Host address bus.
pin156: VSS : - : Negative supply voltage.
pin157: VCC : - : Positive supply voltage.
pin158: HA 2 :I/O: Host address bus.
pin159: VPP : - : Connect to ground.
pin160: AUX 0 :I/O: Auxiliary input/output.
pin161: AUX 1 :I/O: Auxiliary input/output.
pin162: AUX 2 :I/O: Auxiliary input/output.
pin163: VSS : - : Negative supply voltage.
pin164: VCC : - : Positive supply voltage.
pin165: AUX 3 :I/O: Auxiliary input/output.
pin166: AUX 4 :I/O: Auxiliary input/output.
pin167: AUX 5 :I/O: Auxiliary input/output.
pin168: AUX 6 :I/O: Auxiliary input/output.
pin169: AUX 7 :I/O: Auxiliary input/output.
pin170: LOE : O : Device output enable.
pin171: VSS : - : Negative supply voltage.
pin172: VCC : - : Positive supply voltage.
pin173: LCS 0 : O : Chip select output.
pin174: LCS 1 : O : Chip select output.
pin175: LCS 2 : O : Chip select output.
pin176: LCS 3 : O : Chip select output.
pin177: VSS : - : Negative supply voltage.
pin178: LD 0 :I/O: Device data input/output.
pin179: LD 1 :I/O: Device data input/output.
pin180: LD 2 :I/O: Device data input/output.
pin181: LD 3 :I/O: Device data input/output.
pin182: LD 4 :I/O: Device data input/output.
pin183: VCC : - : Positive supply voltage.
pin184: VSS : - : Negative supply voltage.
pin185: LD 5 :I/O: Device data input/output.
pin186: LD 6 :I/O: Device data input/output.
pin187: LD 7 :I/O: Device data input/output.
pin188: LD 8 :I/O: Device data input/output.
pin189: LD 9 :I/O: Device data input/output.
pin190: LD 10 :I/O: Device data input/output.
pin191: LD 11 :I/O: Device data input/output.
pin192: VSS : - : Negative supply voltage.
pin193: VCC : - : Positive supply voltage.
pin194: LD 12 :I/O: Device data input/output.
pin195: LD 13 :I/O: Device data input/output.
pin196: LD 14 :I/O: Device data input/output.
pin197: LD 15 :I/O: Device data input/output.
pin198: LWRLL : O : Device write enable.
pin199: LWRHL : O : Device write enable.
pin200: VSS : - : Negative supply voltage.
pin201: VCC : - : Positive supply voltage.

pin202: NU	: - :	Not in use.
pin203: NU	: - :	Not in use.
pin204: LA 0	: O :	Device address output.
pin205: LA 1	: O :	Device address output.
pin206: LA 2	: O :	Device address output.
pin207: LA 3	: O :	Device address output.
pin208: VSS	: - :	Negative supply voltage.

052-5041-51 TMP95CW64F-3UR6(Z) DVD Mechanism Controller

1.Terminal Description

pin 1: A Vref	: IN :	Reference voltage for the internal ADC.
pin 2: A VSS	: - :	Analog ground.
pin 3: A VCC	: - :	Positive supply voltage for the internal analog section.
pin 4: NU	: - :	Not in use.
pin 5: NU	: - :	Not in use.
pin 6: Connect 7	: IN :	Connect to pin7.
pin 7: EJECT SW	: IN :	Eject switch signal input.
pin 8: A MUTE	: O :	The audio mute signal output.
pin 9: SYS P 1	: O :	System power 1 control signal output.
pin 10: NU	: - :	Not in use.
pin 11: RESET	: O :	Reset signal output.
pin 12: TEST 0	: O :	For the test.
pin 13: TEST 1	: O :	For the test.
pin 14: TEST 2	: O :	For the test.
pin 15: TEST 3	: O :	For the test.
pin 16: MCW	: O :	Loading motor control output.
pin 17: MCCW	: O :	Loading motor control output.
pin 18: TX D2	: O :	The serial data output.
pin 19: RX D2	: IN :	The serial data input.
pin 20: DVD R DE CS	: O :	The chip select signal output to the DVD ROM decoder.
pin 21: DVD PRO CS	: O :	The chip enable signal output to DVD processor.
pin 22: NU	: - :	Not in use.
pin 23: SPNDL CNT	: O :	Spindle control output.
pin 24: NU	: - :	Not in use.
pin 25: VCC	: - :	Positive supply voltage.
pin 26: GND	: - :	Ground.
pin 27: X 1	: - :	Crystal connection.
pin 28: X 2	: - :	Crystal connection.
pin 29: CNNCT VCC	: IN :	Connect to VCC.
pin 30: RESET	: IN :	Reset signal input.
pin 31: ACC CNT	: IN :	ACC ON signal input.
pin 32: NU	: - :	Not in use.
pin 33: LE TIME	: O :	For loading/eject time.
pin 34: FG PULSE	: IN :	FG pulse input.
pin 35: DISC MT SHRT	: IN :	Disc motor short brake.
pin 36: DATA REQ	: O :	The data request.
pin 37: D PRO INT	: IN :	The interrupt signal input from DVD processor.
pin 38: CMMD DT REQ	: O :	The command data request output.
pin 39: REM 5V	: O :	Power ON signal output to the 5V supply circuit.
pin 40: ID CONTINUE	: O :	ID check.
pin 41: DVD R DE INT	: IN :	The interrupt signal input from the DVD ROM decoder.
pin 42: NU	: - :	Not in use.
pin 43: DVD R DE RST	: O :	The reset signal output to the DVD ROM decoder.
pin 44: VCC	: - :	Positive supply voltage.
pin 45: D 0	:I/O:	Data input/output.
pin 46: D 1	:I/O:	Data input/output.
pin 47: D 2	:I/O:	Data input/output.
pin 48: D 3	:I/O:	Data input/output.
pin 49: D 4	:I/O:	Data input/output.
pin 50: D 5	:I/O:	Data input/output.
pin 51: D 6	:I/O:	Data input/output.
pin 52: D 7	:I/O:	Data input/output.
pin 53: TEST 4	: O :	For the test.
pin 54: TEST 5	: O :	For the test.
pin 55: TEST 6	: O :	For the test.
pin 56: TEST 7	: O :	For the test.
pin 57: TEST 8	:I/O:	For the test.
pin 58: TEST 9	:I/O:	For the test.
pin 59: TEST 10	:I/O:	For the test.
pin 60: TEST 11	:I/O:	For the test.
pin 61: CNNCT VCC	: IN :	Connect to VCC.
pin 62: GND	: - :	Ground.
pin 63: VCC	: - :	Positive supply voltage.
pin 64: BUSY OUT	: O :	Busy flag output.
pin 65: DISC	: O :	Disc distinction signal output.
pin 66: LAYER	: O :	Layer distinction signal output.
pin 67: NU	: - :	Not in use.
pin 68: CHUKING	: IN :	The chucking switch signal input.
pin 69: DVD MCH S 1	: IN :	The sensor signal input from DVD mechanism.
pin 70: DVD MCH S 2	: IN :	The sensor signal input from DVD mechanism.
pin 71: DVD MCH S 3	: IN :	The sensor signal input from DVD mechanism.
pin 72: NU	: - :	Not in use.
pin 73: NU	: - :	Not in use.
pin 74: NU	: - :	Not in use.
pin 75: NU	: - :	Not in use.
pin 76: MA	: O :	MA.
pin 77: NU	: - :	Not in use.
pin 78: NU	: - :	Not in use.
pin 79: NU	: - :	Not in use.
pin 80: AD 7	: O :	Address output.
pin 81: AD 6	: O :	Address output.
pin 82: AD 5	: O :	Address output.
pin 83: AD 4	: O :	Address output.
pin 84: AD 3	: O :	Address output.
pin 85: AD 2	: O :	Address output.
pin 86: AD 1	: O :	Address output.
pin 87: AD 0	: O :	Address output.
pin 88: RD STRB	: O :	The read strobe output.
pin 89: WR STRB	: O :	The write strobe output.
pin 90: NU	: - :	Not in use.
pin 91: GND	: - :	Ground.
pin 92: TEST 12	: IN :	For the test.
pin 93: TEST 13	: IN :	For the test.
pin 94: TEST 14	: IN :	For the test.
pin 95: TEST 15	: IN :	For the test.
pin 96: TEST 16	: IN :	For the test.
pin 97: TEST 17	: IN :	For the test.
pin 98: LIMIT SNC	: IN :	The inside limit signal input from the mechanism.
pin 99: NU	: - :	Not in use.
pin100: Vref H	: - :	Reference voltage.

052-6056-00 M30622MAA-F43GP Master System controller

1.Terminal Description

pin 1: SPEED PULSE	: IN :	The speed pulse input.
pin 2: TIME BASE	: IN :	Time base pulse input.
pin 3: SPEED SEL 1	: O :	The time constant select signal output for the speed pulse counter.
pin 4: SPEED SEL 2	: O :	The time constant select signal output for the speed pulse counter.
pin 5: RDS CLK	: IN :	RDS clock pulse input.
pin 6: BYTE	: IN :	Input "L" at single mode operation.
pin 7: CN VSS	: IN :	Input "L" at single mode operation.
pin 8: SYS ACC	: O :	ACC detect signal output.
pin 9: NU	: - :	Not in use.
pin 10: RESET	: IN :	Reset signal input.
pin 11: X OUT	: O :	Crystal connection.
pin 12: VSS	: - :	Negative supply voltage.
pin 13: X IN	: IN :	Crystal connection.
pin 14: VCC	: - :	Positive supply voltage.
pin 15: NMI	: IN :	Connect to VCC.
pin 16: ACC DET	: IN :	ACC detection signal input.
pin 17: BU DET	: IN :	Backup detection signal input.
pin 18: MST REQ	: IN :	The master request signal input.
pin 19: 27pinConnect	: IN :	Connect to pin 27.
pin 20: AMP REM DT	: IN :	Remote controller wire short detection.
pin 21: EX AMP REM	: O :	The external amplifier control signal output.
pin 22: NU	: - :	Not in use.
pin 23: SLAVE ON	: O :	Slave ON signal output.
pin 24: BUS IN OUT	: O :	The audio selection signal output for Ce-NET.
pin 25: NU	: - :	Not in use.

pin 26:	NU	: - :	Not in use.
pin 27:	S D IN	:IN:	The serial data input.
pin 28:	S D OUT	: O :	The serial data output.
pin 29:	NU	: - :	Not in use.
pin 30:	NU	: - :	Not in use.
pin 31:	NU	: - :	Not in use.
pin 32:	PLL CE	: O :	The chip enable signal output to the PLL IC.
pin 33:	PLL DO	: O :	Serial data output to the PLL IC.
pin 34:	PLL DI	:IN:	Serial data input from the PLL IC.
pin 35:	PLL SCLK	: O :	The clock pulse output for PLL.
pin 36:	NU	: - :	Not in use.
pin 37:	NU	: - :	Not in use.
pin 38:	NU	: - :	Not in use.
pin 39:	NU	: - :	Not in use.
pin 40:	NU	: - :	Not in use.
pin 41:	FLASH WR	:IN:	The write flag input from the flash memory.
pin 42:	VOL CLK	: O :	The clock pulse output to the volume IC.
pin 43:	VOL DO	: O :	Serial data output to the volume IC.
pin 44:	AREA 1	:IN:	The destination setting input.
pin 45:	AREA 2	:IN:	The destination setting input.
pin 46:	8p Navi Mute	: O :	8pin navigation audio mute signal output.
pin 47:	CeN Navi Mute	: O :	Ce-NET navigation audio mute signal output.
pin 48:	AUDIO SEL	: O :	The audio source select signal output.
pin 49:	SEL 2	:IN:	The selection signal input.
pin 50:	SEL 3	:IN:	The selection signal input.
pin 51:	V2 SEL 2	:IN:	The selection signal input.
pin 52:	V3 SEL 3	:IN:	The selection signal input.
pin 53:	F Image Sel 1	: O :	The front image source selection signal output.
pin 54:	F Image Sel 2	: O :	The front image source selection signal output.
pin 55:	F Image Sel 3	: O :	The front image source selection signal output.
pin 56:	R Image Sel 1	: O :	The rear image source selection signal output.
pin 57:	R Image Sel 2	: O :	The rear image source selection signal output.
pin 58:	R Image Sel 3	: O :	The rear image source selection signal output.
pin 59:	R Image Sel 4	: O :	The rear image source selection signal output.
pin 60:	VCC	: - :	Positive supply voltage.
pin 61:	NU	: - :	Not in use.
pin 62:	VSS	: - :	Negative supply voltage.
pin 63:	NU	: - :	Not in use.
pin 64:	R Image Sel 5	: O :	The rear image source selection signal output.
pin 65:	FM ST/SD	:IN:	At receiving the FM station, this port detects the stereo signal. And at seeking or scanning, this port detects the station detection signal.
pin 66:	NOISE DISCH	: O :	The noise discharge command output for RDS.
pin 67:	MUTE SPD UP	: O :	Station detection speed up command output for RDS.
pin 68:	Diagnosis	: O :	For the diagnosis.
pin 69:	RDS MUTE	: O :	RDS mute signal output.
pin 70:	RDS DATA	:IN:	RDS serial data input.
pin 71:	NU	: - :	Not in use.
pin 72:	SYS MUTE	: O :	System muting signal output.
pin 73:	5V ON	: O :	The ON command output to the power supply section.
pin 74:	AV ON	: O :	The ON command output to the power supply section.
pin 75:	DVD 8V ON	: O :	The ON command output to the power supply section.
pin 76:	A ANT REM	: O :	The automatic antenna control signal output.
pin 77:	LINE MUTE	: O :	The line mute signal output.
pin 78:	NU	: - :	Not in use.
pin 79:	AMP MUTE	: O :	Muting signal output to the Audio Power Amplifier.
pin 80:	AMP REM OUT	: O :	Amplifier ON signal output terminal.
pin 81:	PHONE INT	:IN:	The telephone interrupt signal input.
pin 82:	ILL DET	:IN:	Illumination ON signal input.
pin 83:	PKB	:IN:	The parking brake signal input.
pin 84:	NU	: - :	Not in use.
pin 85:	NU	: - :	Not in use.
pin 86:	NU	: - :	Not in use.
pin 87:	NU	: - :	Not in use.
pin 88:	NU	: - :	Not in use.
pin 89:	S METER	:IN:	The input terminal of internal A/D converter to monitor the radio field strength.
pin 90:	NOISE	:IN:	The noise level for RDS.
pin 91:	SPAN DATA	:IN:	The serial data input from the spectrum analyzer.
pin 92:	NU	: - :	Not in use.
pin 93:	NU	: - :	Not in use.
pin 94:	A VSS	: - :	Analog ground.
pin 95:	NU	: - :	Not in use.
pin 96:	A Vref	:IN:	Reference voltage for the internal ADC.
pin 97:	A VCC	: - :	Positive supply voltage for the internal analog section.
pin 98:	SPAN A	: O :	Spectrum analyzer band selection.
pin 99:	SPAN B	: O :	Spectrum analyzer band selection.
pin100:	SPAN C	: O :	Spectrum analyzer band selection.

052-6058-00 MR27V802D-37TPZA00 8M bit One Time PROM

1.Terminal Description

pin 1:	NU	: - :	Not in use.
pin 2:	A 18	:IN:	The address input.
pin 3:	A 17	:IN:	The address input.
pin 4:	A 7	:IN:	The address input.
pin 5:	A 6	:IN:	The address input.
pin 6:	A 5	:IN:	The address input.
pin 7:	A 4	:IN:	The address input.
pin 8:	A 3	:IN:	The address input.
pin 9:	A 2	:IN:	The address input.
pin 10:	A 1	:IN:	The address input.
pin 11:	A 0	:IN:	The address input.
pin 12:	Chip enable	:IN:	Chip enable signal input.
pin 13:	VSS	: - :	Ground.
pin 14:	Output enable	:IN:	Output enable signal input.
pin 15:	D 0	: O :	The data output.
pin 16:	D 8	: O :	The data output.
pin 17:	D 1	: O :	The data output.
pin 18:	D 9	: O :	The data output.
pin 19:	D 2	: O :	The data output.
pin 20:	D 10	: O :	The data output.
pin 21:	D 3	: O :	The data output.
pin 22:	D 11	: O :	The data output.
pin 23:	VCC	: - :	Positive supply voltage.
pin 24:	D 4	: O :	The data output.
pin 25:	D 12	: O :	The data output.
pin 26:	D 5	: O :	The data output.
pin 27:	D 13	: O :	The data output.
pin 28:	D 6	: O :	The data output.
pin 29:	D 14	: O :	The data output.
pin 30:	D 7	: O :	The data output.
pin 31:	D 15 / A -1	:I/O:	The data output. / The address input.
pin 32:	VSS	: - :	Ground.
pin 33:	BYTE	:IN:	8bit/16bit selection.
pin 34:	A 16	:IN:	The address input.
pin 35:	A 15	:IN:	The address input.
pin 36:	A 14	:IN:	The address input.
pin 37:	A 13	:IN:	The address input.
pin 38:	A 12	:IN:	The address input.
pin 39:	A 11	:IN:	The address input.
pin 40:	A 10	:IN:	The address input.
pin 41:	A 9	:IN:	The address input.
pin 42:	A 8	:IN:	The address input.
pin 43:	NU	: - :	Not in use.
pin 44:	NU	: - :	Not in use.

052-7055-20 NZX0100-1801L Touch-panel & Sub-LCD Controller

1.Terminal Description

pin 1:	C 1	: - :	Not in use.
pin 2:	VL 1	:IN:	Positive voltage input for the LCD.
pin 3:	LCD ON	: O :	LCD back light ON signal output.
pin 4:	GREEN 1	: O :	The LED drive output.
pin 5:	AMBER 1	: O :	The LED drive output.
pin 6:	AUT DIMM	:IN:	The automatic dimmer signal input.

pin 7:	Y R IN	: IN :	The input terminal of the internal ADC.
pin 8:	X R IN	: IN :	The input terminal of the internal ADC.
pin 9:	Y G IN	: IN :	The input terminal of the internal ADC.
pin 10:	X G IN	: IN :	The input terminal of the internal ADC.
pin 11:	KS OUT 2	: O :	Key scan output.
pin 12:	KS OUT 1	: O :	Key scan output.
pin 13:	KS OUT 0	: O :	Key scan output.
pin 14:	DIMMER	: O :	PWM output.
pin 15:	KS IN 3	: IN :	Key scan input.
pin 16:	KS IN 2	: IN :	Key scan input.
pin 17:	KS IN 1	: IN :	Key scan input.
pin 18:	KS IN 0	: IN :	Key scan input.
pin 19:	GREEN 2	: O :	The LED drive output.
pin 20:	AMBER 2	: O :	The LED drive output.
pin 21:	TXD	: O :	The serial data output.
pin 22:	RXD	: IN :	The serial data input.
pin 23:	ST0	: IN :	Connect to the ground.
pin 24:	TPW	: IN :	The touch panel control input.
pin 25:	PA	:I/O:	The touch panel control input/output.
pin 26:	CHK	: O :	The touch panel control output.
pin 27:	Y-	: O :	The touch panel control output.
pin 28:	X-	: O :	The touch panel control output.
pin 29:	Y+	: O :	The touch panel control output.
pin 30:	X+	: O :	The touch panel control output.
pin 31:	REQ O	: O :	Transmit request signal output.
pin 32:	BUSY	: IN :	The busy flag input.
pin 33:	KS OUT 3	: O :	Key scan output.
pin 34:	NU	: - :	Not in use.
pin 35:	RESET	: IN :	Reset signal input.
pin 36:	BLUE OUT	: O :	The LED drive output.
pin 37:	P 7	: O :	FL ON
pin 38:	X IN	: IN :	Crystal connection.
pin 39:	X OUT	: O :	Crystal connection.
pin 40:	VSS	: - :	Negative supply voltage.
pin 41:	P 5	: O :	VIDEO / RGB
pin 42:	P 1	: O :	MODE S
pin 43:	DATA	: O :	DATA
pin 44:	LOAD	: O :	LOAD
pin 45:	CLOCK	: O :	The clock pulse output.
pin 46:	P 4	: O :	CLAMP
pin 47:	P 6	: O :	VIDEO / MUTE
pin 48:	P 0	: O :	NTSC / PAL
pin 49:	P 3	: O :	MODE N
pin 50:	P 2	: O :	MODE W
pin 51:	SEG 39	: O :	The segment output.
pin 52:	SEG 38	: O :	The segment output.
pin 53:	SEG 37	: O :	The segment output.
pin 54:	SEG 36	: O :	The segment output.
pin 55:	SEG 35	: O :	The segment output.
pin 56:	SEG 34	: O :	The segment output.
pin 57:	SEG 33	: O :	The segment output.
pin 58:	SEG 32	: O :	The segment output.
pin 59:	SEG 31	: O :	The segment output.
pin 60:	SEG 30	: O :	The segment output.
pin 61:	SEG 29	: O :	The segment output.
pin 62:	SEG 28	: O :	The segment output.
pin 63:	SEG 27	: O :	The segment output.
pin 64:	SEG 26	: O :	The segment output.
pin 65:	SEG 25	: O :	The segment output.
pin 66:	SEG 24	: O :	The segment output.
pin 67:	SEG 23	: O :	The segment output.
pin 68:	SEG 22	: O :	The segment output.
pin 69:	SEG 21	: O :	The segment output.
pin 70:	SEG 20	: O :	The segment output.
pin 71:	SEG 19	: O :	The segment output.
pin 72:	SEG 18	: O :	The segment output.
pin 73:	SEG 17	: O :	The segment output.
pin 74:	SEG 16	: O :	The segment output.
pin 75:	SEG 15	: O :	The segment output.
pin 76:	SEG 14	: O :	The segment output.
pin 77:	SEG 13	: O :	The segment output.
pin 78:	SEG 12	: O :	The segment output.
pin 79:	SEG 11	: O :	The segment output.
pin 80:	SEG 10	: O :	The segment output.
pin 81:	SEG 9	: O :	The segment output.
pin 82:	SEG 8	: O :	The segment output.
pin 83:	SEG 7	: O :	The segment output.
pin 84:	SEG 6	: O :	The segment output.
pin 85:	SEG 5	: O :	The segment output.
pin 86:	SEG 4	: O :	The segment output.
pin 87:	SEG 3	: O :	The segment output.
pin 88:	SEG 2	: O :	The segment output.
pin 89:	SEG 1	: O :	The segment output.
pin 90:	SEG 0	: O :	The segment output.
pin 91:	VCC	: - :	Positive supply voltage.
pin 92:	Vref	: - :	Reference voltage.
pin 93:	A Vss	: - :	Analog ground.
pin 94:	COMMON 3	: O :	The common signal output.
pin 95:	COMMON 2	: O :	The common signal output.
pin 96:	COMMON 1	: O :	The common signal output.
pin 97:	COMMON 0	: O :	The common signal output.
pin 98:	VL 3	: IN :	Positive supply voltage for LCD.
pin 99:	VL 2	: IN :	Positive supply voltage for LCD.
pin100:	C 2	: - :	Not in use.

052-7062-01 uPD703037AGF-A14-3BA Main Display Controller

1.Terminal Description

pin 1:	NU	: - :	Not in use.
pin 2:	ESS CK	: IN :	The clock pulse input from DVD Signal Processor.
pin 3:	ESS RST	: O :	The reset pulse output to DVD Signal Processor.
pin 4:	DVD ACC ON	: O :	DVD ACC ON.
pin 5:	DVD EJECT	: O :	DVD EJECT.
pin 6:	TP RX	: IN :	The serial data input from the touch panel.
pin 7:	TP TX	: O :	The serial data output to the touch panel.
pin 8:	TP REQ	: IN :	The request signal from the touch panel.
pin 9:	VDD	: - :	Positive supply voltage.
pin 10:	VSS	: - :	Negative supply voltage.
pin 11:	TP RST	: O :	The reset pulse output to the touch panel.
pin 12:	BEEP	: O :	Beep out.
pin 13:	DVD 8V DET	: IN :	DVD 8V detection.
pin 14:	KS IN 0	: IN :	Key scan input.
pin 15:	KS IN 1	: IN :	Key scan input.
pin 16:	IRI	: IN :	The remote control signal input.
pin 17:	KS IN 2	: IN :	Key scan input.
pin 18:	KS IN 3	: IN :	Key scan input.
pin 19:	KS OUT 0	: O :	Key scan output.
pin 20:	KS OUT 1	: O :	Key scan output.
pin 21:	FLASH PRG	: IN :	The flash memory program command input.
pin 22:	KS OUT 2	: O :	Key scan output.
pin 23:	GREEN	: O :	Signal output for the LED.
pin 24:	AMBER	: O :	Signal output for the LED.
pin 25:	BLINK LED	: O :	Signal output for the LED.
pin 26:	IE RX	: IN :	IE-Bus serial data intput.
pin 27:	IE TX	: O :	IE-Bus serial data output.
pin 28:	EEP DI	: IN :	The serial data input from EEP-ROM.
pin 29:	EEP DO	: O :	The serial data output to EEP-ROM.
pin 30:	EEP CLK	: O :	The clock pulse output to EEP-ROM.
pin 31:	EEP CEO	: O :	The chip enable signal output to EEP-ROM.
pin 32:	V SEL	: O :	The video select output.
pin 33:	FLASH WR	: IN :	The write flag input from the flash ROM.
pin 34:	RESET	: IN :	Reset signal input.
pin 35:	PLL DOWN	: IN :	Not in use.
pin 36:	NU	: - :	Not in use.
pin 37:	REG CAPA	: - :	The capacitor connection.
pin 38:	X OUT	: O :	Crystal connection.
pin 39:	X IN	: IN :	Crystal connection.
pin 40:	GND	: - :	Ground.
pin 41:	VDD	: - :	Positive supply voltage.
pin 42:	NU	: - :	Not in use.
pin 43:	NAVI ON	: O :	NAVI ON signal output.
pin 44:	BLKO	: O :	The blanking signal output.
pin 45:	RGB ON	: O :	RGB ON signal output.
pin 46:	UP/DWN MF	: O :	Up/Down motor control.
pin 47:	UP/DWN MR	: O :	Up/Down motor control.
pin 48:	OPN CLS MF	: O :	Open/Close motor control.

pin 49:	OPN CLS MR	: O :	Open/Close motor control.
pin 50:	OSD CD 7	:I/O:	The parallel data input/output for the on screen display.
pin 51:	OSD CD 6	:I/O:	The parallel data input/output for the on screen display.
pin 52:	OSD CD 5	:I/O:	The parallel data input/output for the on screen display.
pin 53:	OSD CD 4	:I/O:	The parallel data input/output for the on screen display.
pin 54:	OSD CD 3	:I/O:	The parallel data input/output for the on screen display.
pin 55:	OSD CD 2	:I/O:	The parallel data input/output for the on screen display.
pin 56:	OSD CD 1	:I/O:	The parallel data input/output for the on screen display.
pin 57:	OSD CD 0	:I/O:	The parallel data input/output for the on screen display.
pin 58:	VDD	: - :	Positive supply voltage.
pin 59:	GND	: - :	Ground.
pin 60:	OSD RD	: O :	The read command output for the on screen display.
pin 61:	OSD WR	: O :	The write command output for the on screen display.
pin 62:	OSD CS	: O :	The chip select signal output to on screen display.
pin 63:	OSD PS2	: O :	On screen display port select.
pin 64:	OSD PS1	: O :	On screen display port select.
pin 65:	OSD PS0	: O :	On screen display port select.
pin 66:	OSD RST	: O :	The reset pulse output for the on screen display.
pin 67:	ROM EN	: O :	ROM enable signal output.
pin 68:	PNL ON	: O :	The panel ON signal output.
pin 69:	MTR PWR SEL	: O :	The voltage select signal output for the motors.
pin 70:	MTR ON	: O :	The motor ON signal output.
pin 71:	DVD ON 2	: O :	DVD ON signal output.
pin 72:	DVD ON 1	: O :	DVD ON signal output.
pin 73:	AV ON	: O :	The ON command output to the power supply section.
pin 74:	A VDD	: - :	Positive supply voltage for the Analog section.
pin 75:	A VSS	: - :	Analog ground.
pin 76:	A Vref	: IN :	Reference voltage for the internal ADC.
pin 77:	OSD WAIT	: IN :	The wait signal input for the on screen display.
pin 78:	INIT 1	: IN :	The initial setting input.
pin 79:	INIT 2	: IN :	The initial setting input.
pin 80:	INIT 3	: IN :	The initial setting input.
pin 81:	INIT 4	: IN :	The initial setting input.
pin 82:	INIT 5	: IN :	The initial setting input.
pin 83:	SYS PWR 1	: IN :	System power ON signal input.
pin 84:	PWR SW	: IN :	Power switch signal input.
pin 85:	EJECT SW	: IN :	Eject switch signal input.
pin 86:	OPEN SW	: IN :	Open switch signal input.
pin 87:	TILT AD	: IN :	The input terminal of the internal ADC to sense the tilt.
pin 88:	OPEN AD	: IN :	The input terminal of the internal ADC to detect the mechanism state.
pin 89:	BU DET	: IN :	Backup detection signal input.
pin 90:	SLAVE ON	: IN :	Slave ON signal input.
pin 91:	DCP DET	: IN :	DCP detection siganl input.
pin 92:	SW INT	: IN :	The switch signal input.
pin 93:	ILL DET	: IN :	Illumination ON signal input.
pin 94:	OSD INT	: IN :	The interrupt signal input for the on screen display.
pin 95:	MST REQ	: O :	The master request signal output.
pin 96:	ESS RESET	: IN :	The reset signal input from DVD Signal Processor.
pin 97:	F END RST	: O :	The front end reset.
pin 98:	ESS DO	: O :	The serial data output to DVD Signal Processor.
pin 99:	ESS CK	: O :	The clock pulse output to DVD Signal Processor.
pin100:	ESS DI	: IN :	The serial data input from DVD Signal Processor.

052-7063-01 MR27V1602F-OHCTP 16M bit One Time PROM

1.Terminal Description

pin 1:	NU	: - :	Not in use.
pin 2:	A 18	: IN :	The address input.
pin 3:	A 17	: IN :	The address input.
pin 4:	A 7	: IN :	The address input.
pin 5:	A 6	: IN :	The address input.
pin 6:	A 5	: IN :	The address input.
pin 7:	A 4	: IN :	The address input.
pin 8:	A 3	: IN :	The address input.
pin 9:	A 2	: IN :	The address input.
pin 10:	A 1	: IN :	The address input.
pin 11:	A 0	: IN :	The address input.
pin 12:	Chip enable	: IN :	Chip enable signal input.
pin 13:	VSS	: - :	Ground.
pin 14:	Output enable	: IN :	Output enable signal input.
pin 15:	D 0	: O :	The data output.
pin 16:	D 8	: O :	The data output.
pin 17:	D 1	: O :	The data output.
pin 18:	D 9	: O :	The data output.
pin 19:	D 2	: O :	The data output.
pin 20:	D 10	: O :	The data output.
pin 21:	D 3	: O :	The data output.
pin 22:	D 11	: O :	The data output.
pin 23:	VCC	: - :	Positive supply voltage.
pin 24:	D 4	: O :	The data output.
pin 25:	D 12	: O :	The data output.
pin 26:	D 5	: O :	The data output.
pin 27:	D 13	: O :	The data output.
pin 28:	D 6	: O :	The data output.
pin 29:	D 14	: O :	The data output.
pin 30:	D 7	: O :	The data output.
pin 31:	D 15 / A -1	:I/O:	The data output. / The address input.
pin 32:	VSS	: - :	Ground.
pin 33:	BYTE	: IN :	8bit/16bit selection.
pin 34:	A 16	: IN :	The address input.
pin 35:	A 15	: IN :	The address input.
pin 36:	A 14	: IN :	The address input.
pin 37:	A 13	: IN :	The address input.
pin 38:	A 12	: IN :	The address input.
pin 39:	A 11	: IN :	The address input.
pin 40:	A 10	: IN :	The address input.
pin 41:	A 9	: IN :	The address input.
pin 42:	A 8	: IN :	The address input.
pin 43:	A 19	: IN :	The address input.
pin 44:	NU	: - :	Not in use.

EXPLODED VIEW : PARTS LIST

Main unit 1/2 section

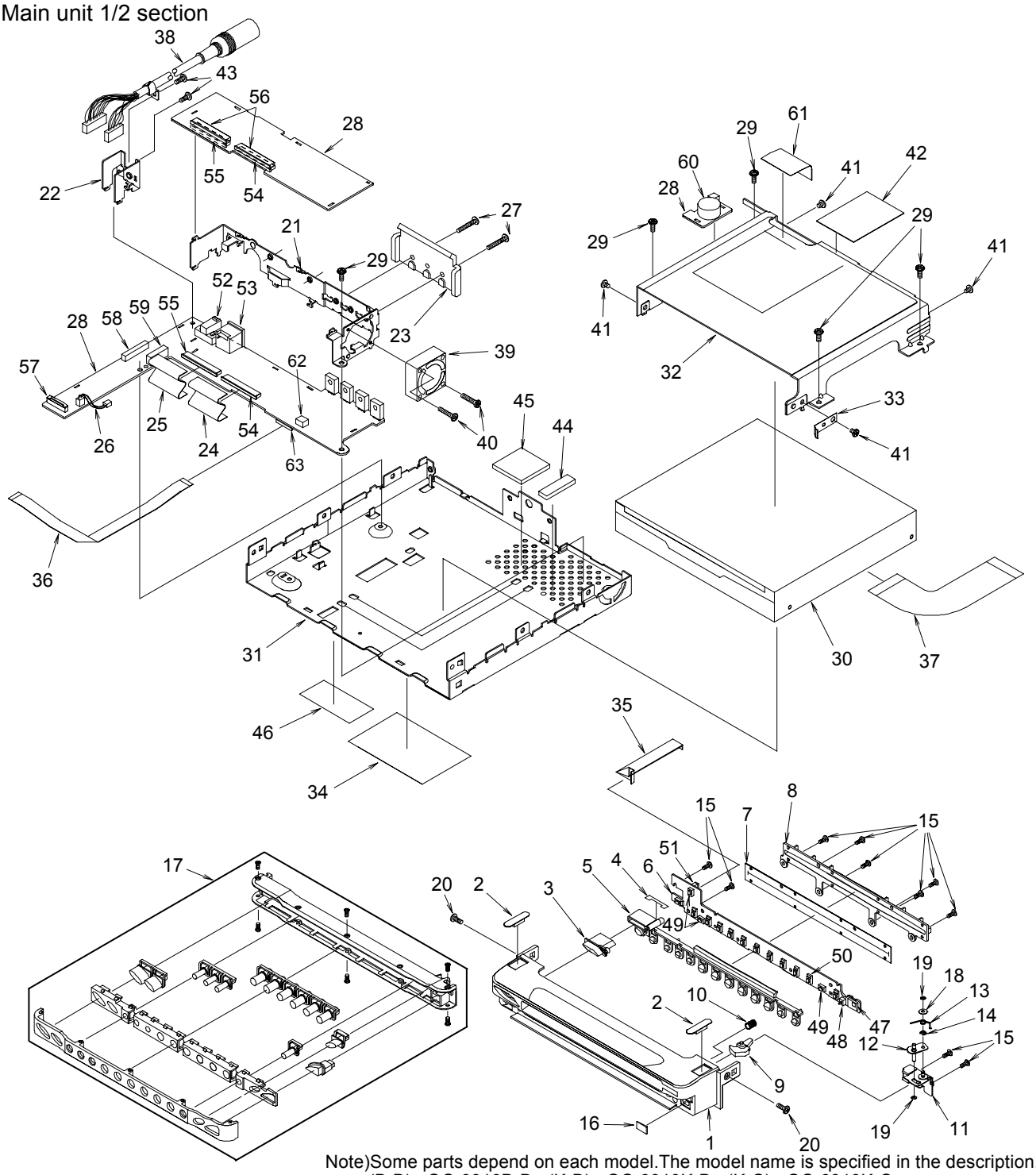

Note)Some parts depend on each model.The model name is specified in the description.
(B-B) : QC-6810B-B , (K-B) : QC-6810K-B , (K-C) : QC-6810K-C

NO.	PART NO.	DESCRIPTION	Q'TY
1	370-9613-00	ESCUTCHEON	1
2	345-5186-00	SLIDER	2
3	382-6463-00	BUTTON EJECT	1
4	347-6795-00	SPACER	1
5	335-6729-00	BUTTON PLATE	1
6	039-2137-00	INNER SWITCH PWB (WITHOUT COMPONENT)	1
7	346-0151-00	LEATHER SHEET	1
8	335-6730-00	DICS GUIDE	1
9	335-6728-00	RELEASE LEVER	1
10	750-6729-00	SPRING	1
11	331-3391-00	DCP HOLDER	1

NO.	PART NO.	DESCRIPTION	Q'TY
12	331-3392-00	DCP PLATE	1
13	750-6728-00	SPRING RELEASE	1
14	743-1500-20	E-RING	1
15	716-0872-02	PAD SCREW	10
16	335-6836-00	IR PLATE	1
17	DCP-396-601	DCP ASSY	1
18	746-0931-00	WASHER	1
19	746-0761-00	WASHER	2
20	781-2650-00	SCREW	2
21	331-3389-02	BRACKET A	1
22	331-3390-00	BRACKET B	1

NO.	PART NO.	DESCRIPTION	Q'TY
23	313-1841-00	HEAT SINK	1
24	816-2584-00	FLAT WIRE(45P)	1
25	816-2585-00	FLAT WIRE(50P)	1
26	854-4547-50	EXTENSION LEAD	1
27	714-2610-81	MACHINE SCREW	2
28	039-2132-01	MAIN PWB (WITHOUT COMPONENT)	1
29	716-0878-00	IT-SCREW	5
30	929-2125-01	DVD MECHANISM MODULE	1
31	311-1853-00	LOWER CASE	1
32	331-3387-00	MECHANISM BRKT	1
33	331-3388-00	EARTH PLATE	1
34	286-9967-01 286-6120-00 286-6119-00	SETPLATE(B-B) SETPLATE(K-B) SETPLATE(K-C)	1
35	816-2582-00	FLAT WIRE(18P)	1
36	816-2583-00	FLAT WIRE(18P)	1
37	039-2147-00	FLEXIBLE PWB(DVD 50P)	1
38	855-0552-01	MULTI POLE CPRD	1
39	020-3045-00	FAN(DC-MOTOR)	1
40	780-2014-00	SCREW	2
41	714-2603-81	MACHINE SCREW	4
42	347-6794-00	SHIELD FILM	1

NO.	PART NO.	DESCRIPTION	Q'TY
43	714-2604-81	MACHINE SCREW	2
44	345-5175-00	SPACER	1
45	345-5176-00	SPACER	1
46	290-8183-00	DTS LABEL	1
47	060-4008-00	IR-RECEIVER	1
48	013-7411-50	DETECTOR SWITCH	1
49	013-6507-50	LUMI SWITCH	3
50	013-6519-50	LUMI SWITCH	12
51	074-1287-70	OUTLET SOCKET(20P)	1
52	074-1125-02	OUTLET SOCKET(2P)	1
53	075-0385-00	JACK(OPTICAL)	1
54	074-1189-95	OUTLET SOCKET(45P)	2
55	074-1189-00	OUTLET SOCKET(50P)	2
56	074-1205-00	OUTLET SOCKET(50P)	2
57	074-1287-70	OUTLET SOCKET(20P)	1
58	076-0576-15	PLUG(15P)	1
59	076-0276-05	PLUG(5P)	1
60	060-0100-01	BUZZER	1
61	347-6796-00	PROTECT FILM	1
62	076-0488-02	PLUG(2P)	1
63	074-1100-68	OUTLET SOCKET(18P)	1

Main unit 2/2 section

NO.	PART NO.	DESCRIPTION	Q'TY
1	039-2138-00	LCD PWB (WITHOUT COMPONENT)	1
2	039-2140-00	SUB LCD PWB (WITHOUT COMPONENT)	1
3	347-6783-00	REFLECTOR	1
4	335-6734-00	ILLUMI PLATE	1
5	347-6782-00	FILM	1
6	379-1237-41	INDICATOR(SUB LCD)	1
7	347-6805-00	SHADE	1
8	331-3408-00	S-LCD HOLDER	1
9	345-8739-01	SPACER	2
10	335-6731-00	S-LCD COVER	1
11	382-6465-00	BUTTON(DISP/OPN)	1
12	382-6464-00	BUTTON(+/-)	1
13	373-0983-00	DIAL COVER	1
14	378-0537-00	BADGE	1
15	716-3483-00	SCREW	2
16	716-1845-01	SCREW	2
17	781-2040-01	P-SCREW	4
18	370-9614-03 370-9614-06	ESCUTCHEON(B-B) ESCUTCHEON(K-B/K-C)	1
19	371-5729-00	TRIM PLATE	1
20	335-6732-00	REFLECTOR	1
21	382-6466-00	BUTTON(A/N/TILT)	1
22	382-6467-00	BUTTON(6-PIECES)	1
23	382-6468-00	BUTTON(FF/REW)	1
24	039-2139-01	PANEL SWITCH PWB (WITHOUT COMPONENT)	1
25	716-0872-00	PAD SCREW	3
26	347-6834-00	SHADE	1

NO.	PART NO.	DESCRIPTION	Q'TY
27	335-6491-01	ES-COVER(L)	1
28	335-6492-01	ES-COVER(R)	1
29	714-5008-41	MACHINE SCREW	2
30	750-3137-02	SPRING(L)	1
31	750-3137-03	SPRING(R)	1
32	714-2604-81	MACHINE SCREW	6
33	379-0458-10	INDICATOR(7INCH LCD)	1
34	013-9706-00	SWITCH ASSY	1
35	347-6450-00	DOUBLE FACE	1
36	347-6629-00	DOUBLE FACE	1
37	347-6085-00	DOUBLE FACE	4
38	345-8598-00	CUSHION	1
39	345-8618-01	CUSHION	2
40	347-6805-00	SHADE	1
41	383-0687-00	BADGE(CLARION)	1
42	345-8737-00	SHADE	2
43	716-1845-01	SCREW	3
44	347-6780-00	SHADE	1
45	948-0646-00	SLIDE MECHANISM ASSY	1
46	347-6586-00	MOTOR COVER	2
47	347-6451-00	DOUBLE FACE	4
48	347-6781-00	INSULATOR(LCD)	1
49	335-6733-00	UPPER TRIM	1
50	039-2144-00	FLEXIBLE PWB(50P)	1
51	781-2026-00	SCREW	5
52	781-1750-00	SCREW	4
53	738-2630-17	PRECISION SCREW	2
54	781-1722-00	SCREW	6

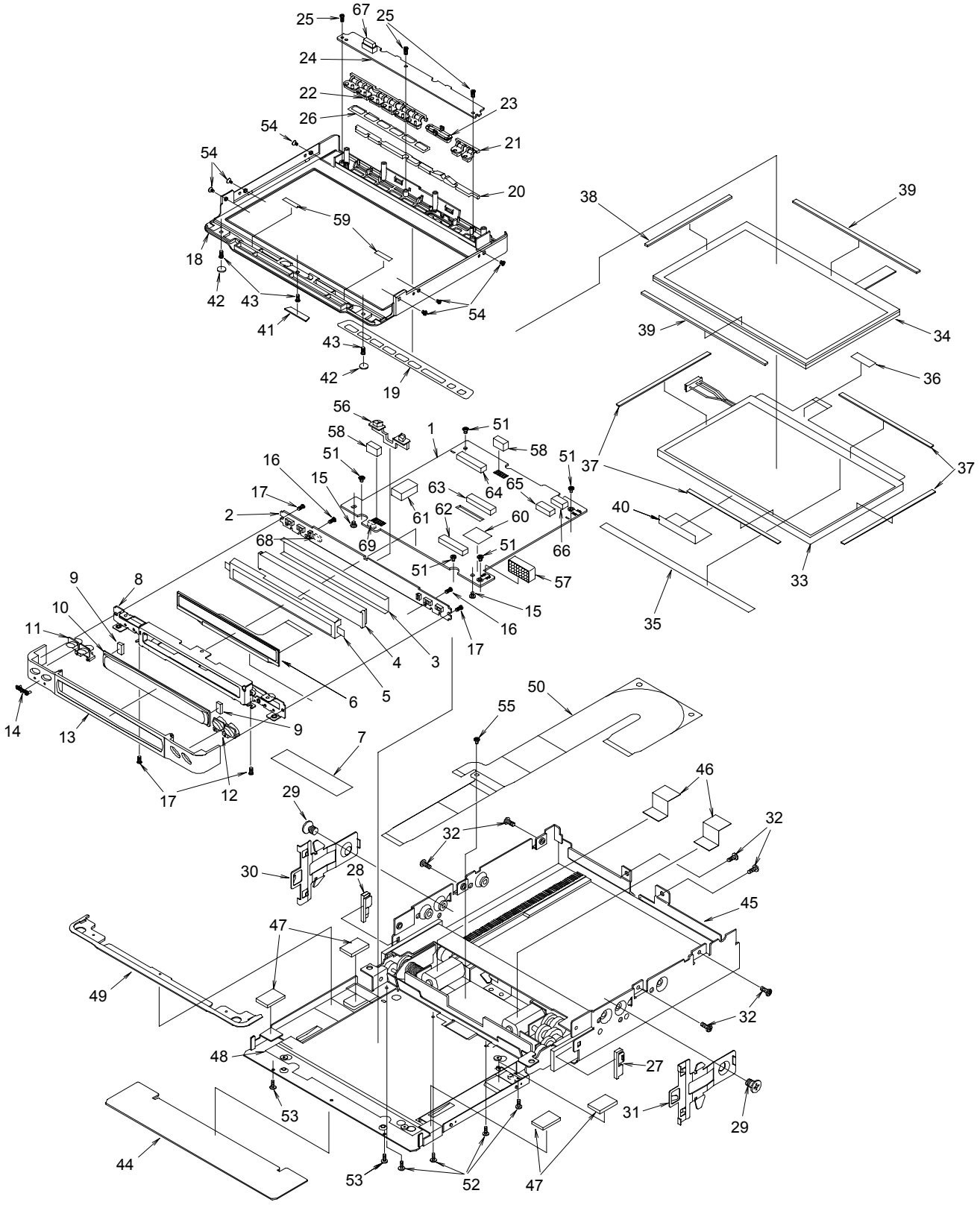

NO.	PART NO.	DESCRIPTION	Q'TY
55	780-2003-00	SCREW	1
56	335-6776-00	SENSOR ILLUMI	1
57	345-5185-01	GASKET	1
58	345-8738-00	SPACER	2
59	347-6807-00	SPACER	2
60	347-5541-01	INSULATOR	1
61	076-0529-04	PLUG(4P)	1
62	074-1189-95	OUTLET SOCKET(45P)	1

NO.	PART NO.	DESCRIPTION	Q'TY
63	074-1189-85	OUTLET SOCKET(35P)	1
64	074-1205-82	OUTLET SOCKET(32P)	1
65	074-1275-58	OUTLET SOCKET(8P)	1
66	076-0645-80	PLUG(30P)	1
67	074-1276-80	OUTLET SOCKET(30P)	1
68	074-1296-64	OUTLET SOCKET(14P)	1
69	076-0663-64	PLUG(14P)	1

How to release the LCD module

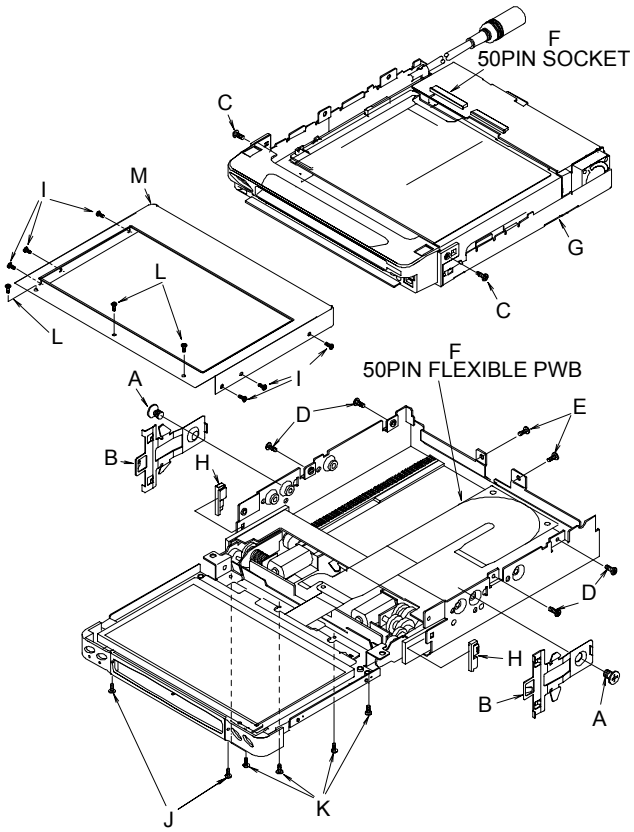

1. Remove the screws(No.Ax2) and the springs(No.Bx2).
2. Remove the screws(No.Cx2,Dx4,Ex2) and release the flexible PWB(No.F).
3. Release the lower case with DVD mechanism(No.G).Release the cover(No.Hx2).
4. Remove the screws(No.Ix6,Jx2,Kx4,Lx3) and release the escutchen(No.M).
5. Pull out the LCD module(with switch ass'y) and release 32P/8P/4P connectors.

Tuner amp unit section

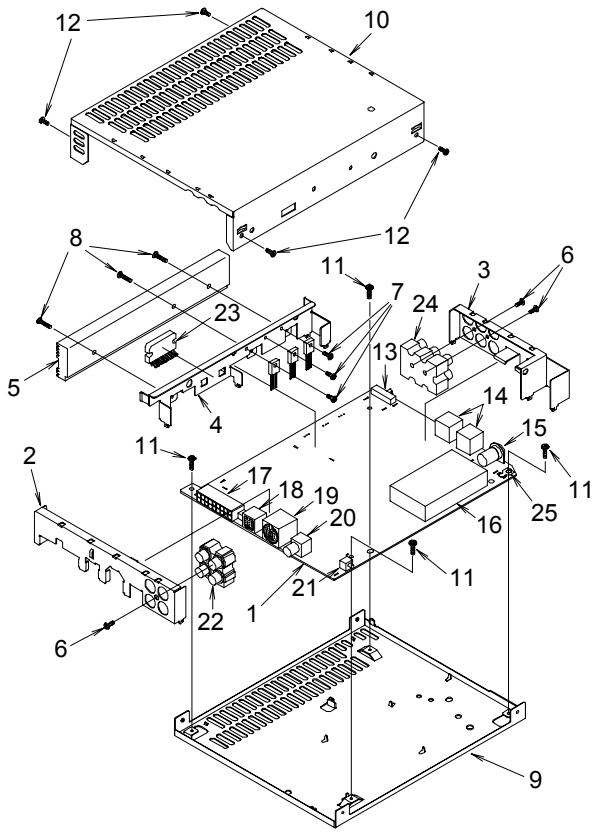

NO.	PART NO.	DESCRIPTION	Q'TY
1	039-2117-01	TUNER PWB (WITHOUT COMPONENT)	1
2	331-3407-00	FRONT PLATE	1
3	331-3405-00	OUTLET HOLDER	1
4	331-3406-00	IC HOLDER	1
5	313-1730-00	HEAT SINK	1
6	702-3008-81	TAP SCREW	3
7	714-3006-81	MACHINE SCREW	3
8	714-2612-81	MACHINE SCREW	3
9	311-1741-03	LOWER CASE	1
10	310-1649-03	UPPER CASE	1
11	716-0878-00	IT-SCREW	4
12	714-2605-81	MACHINE SCREW	4
13	013-5102-00	SLIDE SWITCH	1
14	074-1030-00	OUTLET SOCKET	2
15	092-0612-03	ANTENNA RECEPTACLE	1
16	880-2089K	TUNER	1
17	074-1125-18	OUTLET SOCKET	1
18	074-1194-00	OUTLET SOCKET(13P)	1
19	074-1134-00	OUTLET SOCKET(20P)	1
20	075-0310-03	JACK	1
21	013-3949-00	SWITCH	1
22	075-9002-02	JACK(4P)	1
23	051-2038-10	IC(LA47501)	1
24	075-9001-00	JACK(6P)	1
25	073-0762-90	TERMINAL	1

DVD mechanism section

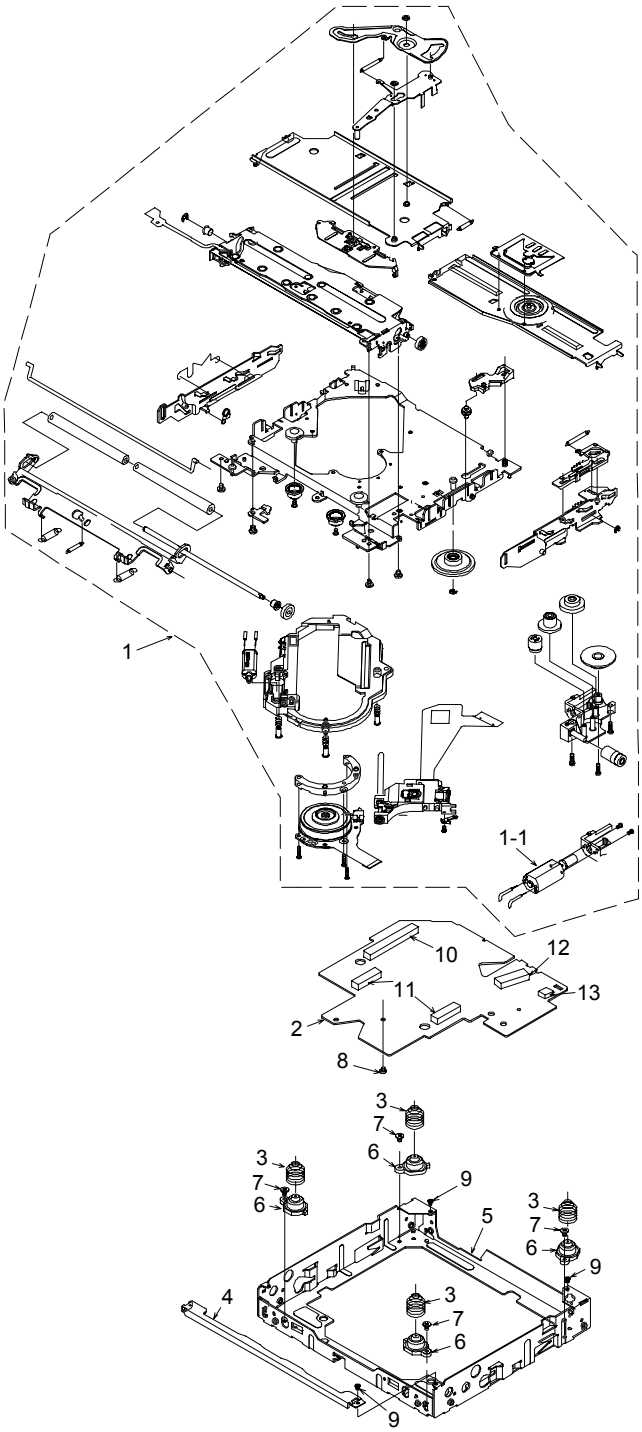

NO.	PART NO.	DESCRIPTION	Q'TY
1	HBS-523-100	MECHANISM ASSY	1
1-1	SMA-187-100	LOADING MOTOR ASSY	1
2	039-1946-01	MAIN PWB (WITHOUT COMPONENT)	1
3	750-3450-01	DAMPER SPRING	4
4	620-0993-00	FRONT STOPPER	1
5	620-0994-01	CHASSIS	1
6	629-0078-02	DAMPER	4
7	716-1851-00	SCREW(M2×2)	4
8	716-1856-00	SCREW(M2×2)	1
9	716-1864-00	SCREW(M1.7×4.5)	3
10	074-1189-00	OUTLET SOCKET(50P)	1
11	074-1201-68	OUTLET SOCKET(18P)	2
12	074-1059-80	OUTLET SOCKET(30P)	1
13	013-7412-50	DETECTOR SWITCH	1

HOW TO CHECK

When the mechanism assy HBS-523-100 is replaced,please check the operation by the following procedure.

Preparation

1. Test disc
   DVD : TDV-562(made by ALMEDIO)
   CD : TCD-732RA(made by ALMEDIO)

Procedure

Operation check by test DVD(TDV-562)

1. Insert the test DVD and play chapter 16. Then,check the access operation.
2. Play chapter 1. Then ,check the access operation.
3. If there is no problem,the operation must be OK.

Operation check by test CD(TCD-732RA)

1. Insert the test CD and play track 15. Then,check the jumping sound.
2. Play track 1. Then,check the jumping sound.
3. If there is no problem,the operation must be OK.

Checking standard

DVD play:Can be played without any stopping and distortion.(more than 10 sec.)

CD play:Can be played correctly without jumping sound.(more than 10 sec.)

Access operation:The access time from inner to outer and outer to inner must be within 2.5 seconds.

ELECTRICAL PARTS LIST

Note) Several different parts of the same reference number are alternative parts. One of those parts is used in the set.

Tuner PWB(B1) section

REF No.	PART No.	DESCRIPTION
BL501	880-2089K	FM/AM TUNER
C502	166-2201-50	22pF CH
C503	166-1007-50	10pF CH
C506	042-0643-51	16V100uF
C507	168-1032-55	0.01uF
C508	168-2232-55	0.022uF
C509	043-0277-51	0.022uF
C510	166-1011-50	100pF CH
C511	168-1022-55	1000pF
C512	042-0643-51	16V100uF
C513	168-1032-55	0.01uF
C514	168-6822-55	6800pF

REF No.	PART No.	DESCRIPTION
C517	166-1501-50	15pF CH
C518	166-1501-50	15pF CH
C519	042-0643-51	16V100uF
C521	168-2732-55	16V0.027uF
C522	168-2732-55	16V0.027uF
C524	043-0277-51	0.022uF
C526	163-1053-65	50V1uF
C527	168-1042-78	16V0.1uF
C528	166-1011-50	100pF CH
C529	042-0474-92	50V1uF NP
C530	178-1052-78	1uF
C531	178-1052-78	1uF

REF No.	PART No.	DESCRIPTION
C532	178-1052-78	1uF
C533	178-1052-78	1uF
C534	163-1063-35	16V10uF
C535	166-1011-50	100pF CH
C537	168-3312-55	330pF
C538	168-1032-55	0.01uF
C539	168-1032-55	0.01uF
C540	163-4763-15	6.3V47uF
C545	178-1052-78	1uF
C546	178-1052-78	1uF
C547	178-1052-78	1uF
C548	168-1032-55	0.01uF

REF No.	PART No.	DESCRIPTION
D602	001-0516-90	MA111
D605	001-0516-90	MA111
D606	001-0516-90	MA111
D607	001-2403-90	M1F60
D609	001-0503-46	HZS9B2L
D610	001-0516-90	MA111
D611	001-0516-90	MA111
D612	001-0516-90	MA111
D617	001-0516-90	MA111
D618	001-0516-90	MA111
D1001	001-0537-90	SFPM-62
D1002	001-0537-90	SFPM-62
D1003	001-0537-90	SFPM-62
D1004	001-0516-90	MA111
D1005	001-0516-90	MA111
D1006	001-0516-90	MA111
D1007	001-0516-90	MA111
D1008	001-0529-44	MA8082-M
D1009	001-0503-46	HZS9B2L
D1010	001-2403-90	M1F60
D1011	001-2403-90	M1F60
D1012	001-0516-90	MA111
D1013	001-2403-90	M1F60
D1014	001-2403-90	M1F60
D1015	001-2403-90	M1F60
D1016	001-2403-90	M1F60
D1018	001-2403-90	M1F60
D1019	001-2403-90	M1F60
D1020	001-2403-90	M1F60
D1021	001-2403-90	M1F60
D1022	001-0592-00	RM4Z
D1023	001-0516-90	MA111
D1024	001-0516-90	MA111
D1025	001-0516-90	MA111
D1026	001-0516-90	MA111
D1027	001-0529-69	MA8180-M
D1028	001-0529-69	MA8180-M
D1029	001-0529-69	MA8180-M
D1030	001-0529-69	MA8180-M
F1001	060-8023-58	3A
F1002	060-8023-58	3A
F1003	060-8023-58	3A
IC501	051-6201-90	LC72146M
IC502	051-5306-90	MM1117XF
IC503	051-5306-90	MM1117XF
IC504	051-5306-90	MM1117XF
IC507	051-5306-90	MM1117XF
IC508	051-5331-90	MM1228XFBE
IC509	051-5326-90	TK15420MTL
IC601	051-6600-38	CA0008AM
IC602	052-6056-00	M30622MAA-F43GP
IC603	051-5408-08	S-80921ANMP-DDJ
IC604	051-5818-90	BA3834F
IC605	051-0869-58	NJM2103M
IC1001	051-1811-90	BA3129F
IC1002	051-1905-93	AN77L06M
IC1003	051-0350-93	NJM4558M
IC1004	051-3015-90	NJM4580M
IC1005	051-5020-90	M61508FP
IC1006	051-0350-93	NJM4558M
IC1007	051-7232-08	74VHC4066M
IC1008	051-5810-90	TDA8574T
IC1009	051-5810-90	TDA8574T
IC1010	051-5810-90	TDA8574T
IC1015	051-2038-10	LA47501
IC1016	051-3015-90	NJM4580M
IC1017	051-3015-90	NJM4580M
J501	074-1030-00	MINI-DIN-8P
J502	074-1030-00	MINI-DIN-8P
J503	075-0310-03	JACK
J504	075-9002-02	JACK
J1001	074-1125-18	18P
J1002	074-1134-00	20P
J1003	075-9001-00	6P

REF No.	PART No.	DESCRIPTION
J1004	074-1194-00	13P CE-NET
L501	010-2003-04	COIL
L502	010-2199-90	220uH J
L505	010-2285-58	BLM21A102FPB
L506	010-2285-58	BLM21A102FPB
L507	010-2199-71	5.6uH J
L601	010-2199-78	22uH J
L1001	010-2199-78	22uH J
L1002	010-2199-78	22uH J
L1003	010-3052-78	220uH
L1004	010-3052-78	220uH
L1005	010-8024-00	CHOKE
L1006	010-8033-00	180uH
Q502	125-2004-93	RN1403
Q505	190-1162-50	2SA1162Y.G
Q506	190-1298-00	2SA1298
Q601	125-0021-97	DTA113ZU
Q603	192-2712-50	2SC2712Y.G.L
Q605	190-1162-50	2SA1162Y.G
Q607	192-2712-50	2SC2712Y.G.L
Q608	190-1162-50	2SA1162Y.G
Q609	190-1162-50	2SA1162Y.G
Q610	103-1270-16	2SD1270P
Q611	108-0241-28	2SK241GR
Q612	190-1162-50	2SA1162Y.G
Q613	125-2004-93	RN1403
Q614	125-2004-93	RN1403
Q615	190-1162-50	2SA1162Y.G
Q616	125-2004-93	RN1403
Q619	190-1162-50	2SA1162Y.G
Q620	125-0002-96	RN2406
Q621	108-0241-28	2SK241GR
Q1001	190-1298-00	2SA1298
Q1002	125-2004-92	RN1402
Q1003	101-1143-00	2SB1143
Q1004	125-2004-93	RN1403
Q1005	125-0002-96	RN2406
Q1006	125-2004-96	RN1406
Q1007	192-2712-50	2SC2712Y.G.L
Q1008	102-3420-50	2SC3420GR,BL
Q1009	108-0241-50	2SK241Y,GR
Q1010	125-2004-93	RN1403
Q1011	190-1162-50	2SA1162Y.G
Q1012	125-2004-93	RN1403
Q1013	190-1736-00	2SA1736
Q1014	125-2004-93	RN1403
Q1015	190-1736-00	2SA1736
Q1016	125-2004-93	RN1403
Q1017	192-2712-50	2SC2712Y.G.L
Q1018	190-1162-50	2SA1162Y.G
Q1019	125-4001-90	XN1504
Q1020	125-4001-90	XN1504
Q1021	125-4001-90	XN1504
Q1024	190-1313-00	2SA1313O,Y
Q1025	192-2712-50	2SC2712Y.G.L
Q1026	125-4001-90	XN1504
Q1027	125-4001-90	XN1504
Q1028	125-4001-90	XN1504
Q1029	125-4001-90	XN1504
R502	119-2221-15	1/16W 2.2k ohm
R504	119-2221-15	1/16W 2.2k ohm
R506	119-1031-15	1/16W 10k ohm
R508	119-7501-15	1/16W 75 ohm
R509	119-7501-15	1/16W 75 ohm
R510	119-2221-15	1/16W 2.2k ohm
R511	119-7501-15	1/16W 75 ohm
R512	119-1021-15	1/16W 1k ohm
R513	119-7501-15	1/16W 75 ohm
R514	032-0140-12	1/10W 75 ohm
R515	119-1021-15	1/16W 1k ohm
R516	119-4741-15	1/16W 470k ohm
R517	119-1021-15	1/16W 1k ohm
R518	119-1021-15	1/16W 1k ohm
R519	119-8211-15	1/16W 820 ohm

REF No.	PART No.	DESCRIPTION
R520	119-1231-15	1/16W 12k ohm
R522	119-1031-15	1/16W 10k ohm
R523	119-5631-15	1/16W 56k ohm
R525	119-0000-05	1/16W 0 ohm JW
R526	119-1041-15	1/16W 100k ohm
R528	119-1031-15	1/16W 10k ohm
R529	119-1521-15	1/16W 1.5k ohm
R531	119-1031-15	1/16W 10k ohm
R532	119-1031-15	1/16W 10k ohm
R533	119-1521-15	1/16W 1.5k ohm
R538	032-0140-12	1/10W 75 ohm
R539	119-4731-15	1/16W 47k ohm
R542	119-2221-15	1/16W 2.2k ohm
R543	119-2221-15	1/16W 2.2k ohm
R544	119-1011-15	1/16W 100 ohm
R545	119-4721-15	1/16W 4.7k ohm
R546	119-1031-15	1/16W 10k ohm
R547	119-1031-15	1/16W 10k ohm
R548	119-3901-15	1/16W 39 ohm
R549	119-7501-15	1/16W 75 ohm
R550	119-4731-15	1/16W 47k ohm
R551	119-1021-15	1/16W 1k ohm
R552	119-1021-15	1/16W 1k ohm
R553	119-2211-15	1/16W 220 ohm
R601	119-3321-15	1/16W 3.3k ohm
R602	119-4731-15	1/16W 47k ohm
R603	119-4731-15	1/16W 47k ohm
R604	119-4731-15	1/16W 47k ohm
R605	119-0000-05	1/16W 0 ohm JW(K-B/K-C)
R606	119-0000-05	1/16W 0 ohm JW(B-B)
R607	119-4731-15	1/16W 47k ohm
R608	119-4731-15	1/16W 47k ohm
R610	119-1021-15	1/16W 1k ohm
R611	116-6801-15	1/8W 68 ohm
R614	119-4721-15	1/16W 4.7k ohm
R615	119-4721-15	1/16W 4.7k ohm
R616	119-1031-15	1/16W 10k ohm
R617	119-1031-15	1/16W 10k ohm
R618	119-1031-15	1/16W 10k ohm
R619	119-1031-15	1/16W 10k ohm
R620	119-4731-15	1/16W 47k ohm
R621	119-4731-15	1/16W 47k ohm
R622	119-4731-15	1/16W 47k ohm
R623	119-4731-15	1/16W 47k ohm
R624	119-1021-15	1/16W 1k ohm
R625	116-1011-15	1/8W 100 ohm
R626	119-4731-15	1/16W 47k ohm
R627	119-1021-15	1/16W 1k ohm
R628	119-1021-15	1/16W 1k ohm
R629	119-1031-15	1/16W 10k ohm
R630	119-2231-15	1/16W 22k ohm
R631	119-4731-15	1/16W 47k ohm
R632	119-4731-15	1/16W 47k ohm
R633	119-4731-15	1/16W 47k ohm
R636	119-1031-15	1/16W 10k ohm
R637	119-1041-15	1/16W 100k ohm
R638	119-1031-15	1/16W 10k ohm
R639	119-4731-15	1/16W 47k ohm
R642	119-1031-15	1/16W 10k ohm
R643	119-1031-15	1/16W 10k ohm
R644	119-2221-15	1/16W 2.2k ohm
R645	119-1031-15	1/16W 10k ohm
R646	119-4731-15	1/16W 47k ohm
R647	119-1031-15	1/16W 10k ohm
R648	119-1541-15	1/16W 150k ohm
R649	119-1031-15	1/16W 10k ohm
R650	119-4731-15	1/16W 47k ohm
R651	119-1041-15	1/16W 100k ohm
R653	119-4321-15	1/16W 4.3k ohm
R657	032-0140-96	1/10W 120k ohm F
R658	032-0140-55	1/16W 4.7k ohm F
R659	032-0140-89	1/4W 47k ohm F

REF No.	PART No.	DESCRIPTION
R662	119-1031-15	1/16W 10k ohm
R663	119-0000-05	1/16W 0 ohm JW
R664	119-5611-15	1/16W 560 ohm
R665	119-2231-15	1/16W 22k ohm
R666	119-4701-15	1/16W 47 ohm
R667	119-4741-15	1/16W 470k ohm
R1001	119-1011-15	1/16W 100 ohm
R1002	119-2231-15	1/16W 22k ohm
R1003	119-2231-15	1/16W 22k ohm
R1004	119-1011-15	1/16W 100 ohm
R1005	119-2231-15	1/16W 22k ohm
R1006	119-2231-15	1/16W 22k ohm
R1007	119-5611-15	1/16W 560 ohm
R1008	119-1031-15	1/16W 10k ohm
R1009	032-0140-89	1/4W 47k ohm F
R1010	032-0140-89	1/4W 47k ohm F
R1011	032-0140-89	1/4W 47k ohm F
R1012	032-0140-89	1/4W 47k ohm F
R1013	119-1031-15	1/16W 10k ohm
R1014	119-1031-15	1/16W 10k ohm
R1015	119-1031-15	1/16W 10k ohm
R1016	119-1031-15	1/16W 10k ohm
R1017	032-0140-58	1/16W 51k ohm F
R1018	032-0140-58	1/16W 51k ohm F
R1019	119-1031-15	1/16W 10k ohm
R1020	119-1031-15	1/16W 10k ohm
R1021	119-4731-15	1/16W 47k ohm
R1022	119-4731-15	1/16W 47k ohm
R1023	119-1831-15	1/16W 18k ohm
R1024	119-4731-15	1/16W 47k ohm
R1025	119-1831-15	1/16W 18k ohm
R1026	119-4731-15	1/16W 47k ohm
R1027	119-4731-15	1/16W 47k ohm
R1028	119-1831-15	1/16W 18k ohm
R1029	119-4731-15	1/16W 47k ohm
R1030	119-1831-15	1/16W 18k ohm
R1031	119-4731-15	1/16W 47k ohm
R1032	119-4731-15	1/16W 47k ohm
R1033	119-1031-15	1/16W 10k ohm
R1034	032-0140-58	1/16W 51k ohm F
R1035	032-0140-58	1/16W 51k ohm F
R1036	119-1031-15	1/16W 10k ohm
R1037	119-1831-15	1/16W 18k ohm
R1038	119-1831-15	1/16W 18k ohm
R1039	119-1831-15	1/16W 18k ohm
R1040	119-1831-15	1/16W 18k ohm
R1041	119-2201-15	1/16W 22 ohm
R1042	119-4731-15	1/16W 47k ohm
R1043	119-4721-15	1/16W 4.7k ohm
R1045	119-1021-15	1/16W 1k ohm
R1046	119-8221-15	1/16W 8.2k ohm
R1047	119-1021-15	1/16W 1k ohm
R1048	119-1221-15	1/16W 1.2k ohm
R1049	119-1041-15	1/16W 100k ohm
R1050	119-1241-15	1/16W 120k ohm
R1051	119-3331-15	1/16W 33k ohm
R1052	119-3331-15	1/16W 33k ohm
R1053	119-1841-15	1/16W 180k ohm
R1054	119-1841-15	1/16W 180k ohm
R1055	119-3331-15	1/16W 33k ohm
R1056	119-1021-15	1/16W 1k ohm
R1057	119-2231-15	1/16W 22k ohm
R1058	119-3331-15	1/16W 33k ohm

REF No.	PART No.	DESCRIPTION
R1059	119-2231-15	1/16W 22k ohm
R1060	119-4731-15	1/16W 47k ohm
R1061	119-1011-15	1/16W 100 ohm
R1062	119-3331-15	1/16W 33k ohm
R1063	119-3331-15	1/16W 33k ohm
R1064	119-3331-15	1/16W 33k ohm
R1065	119-1521-15	1/16W 1.5k ohm
R1066	119-3331-15	1/16W 33k ohm
R1067	119-1011-15	1/16W 100 ohm
R1068	119-1011-15	1/16W 100 ohm
R1069	119-1031-15	1/16W 10k ohm
R1070	119-1011-15	1/16W 100 ohm
R1071	119-1011-15	1/16W 100 ohm
R1072	119-1021-15	1/16W 1k ohm
R1073	119-1021-15	1/16W 1k ohm
R1074	116-1221-15	1/8W 1.2k ohm
R1075	119-1021-15	1/16W 1k ohm
R1076	119-1031-15	1/16W 10k ohm
R1077	119-1021-15	1/16W 1k ohm
R1082	116-1521-15	1/8W 1.5k ohm
R1083	119-2431-15	1/16W 24k ohm
R1084	119-2431-15	1/16W 24k ohm
R1085	119-2431-15	1/16W 24k ohm
R1086	119-2431-15	1/16W 24k ohm
R1087	119-2431-15	1/16W 24k ohm
R1088	119-2431-15	1/16W 24k ohm
R1089	116-1221-15	1/8W 1.2k ohm
R1096	119-1031-15	1/16W 10k ohm
R1100	119-3631-15	1/16W 36k ohm
R1101	119-3631-15	1/16W 36k ohm
R1102	119-3631-15	1/16W 36k ohm
R1103	119-3631-15	1/16W 36k ohm
R1104	119-3631-15	1/16W 36k ohm
R1105	119-3631-15	1/16W 36k ohm
R1109	116-1591-15	1/8W 1.5 ohm
R1110	116-1591-15	1/8W 1.5 ohm
R1111	119-3321-15	1/16W 3.3k ohm
R1112	119-2231-15	1/16W 22k ohm
R1113	116-1591-15	1/8W 1.5 ohm
R1114	116-1591-15	1/8W 1.5 ohm
R1117	119-3321-15	1/16W 3.3k ohm
R1119	119-1031-15	1/16W 10k ohm
R1123	119-2231-15	1/16W 22k ohm
R1124	119-2231-15	1/16W 22k ohm
R1125	119-2231-15	1/16W 22k ohm
R1127	119-2231-15	1/16W 22k ohm
R1128	119-2231-15	1/16W 22k ohm
R1129	119-2231-15	1/16W 22k ohm
R1130	119-1021-15	1/16W 1k ohm
R1131	119-1021-15	1/16W 1k ohm
R1132	119-1021-15	1/16W 1k ohm
R1133	119-3311-15	1/16W 330 ohm
R1134	119-3311-15	1/16W 330 ohm
R1135	119-3311-15	1/16W 330 ohm
R1136	119-3311-15	1/16W 330 ohm
R1137	119-3311-15	1/16W 330 ohm
R1138	119-3311-15	1/16W 330 ohm
R1141	119-1021-15	1/16W 1k ohm
R1142	119-1021-15	1/16W 1k ohm
R1143	119-1021-15	1/16W 1k ohm
R1144	119-1231-15	1/16W 12k ohm
R1147	119-4721-15	1/16W 4.7k ohm
R1148	119-3311-15	1/16W 330 ohm

REF No.	PART No.	DESCRIPTION
R1149	119-3311-15	1/16W 330 ohm
R1150	119-3311-15	1/16W 330 ohm
R1151	119-3311-15	1/16W 330 ohm
R1152	119-1031-15	1/16W 10k ohm
R1153	119-1031-15	1/16W 10k ohm
R1154	119-2231-15	1/16W 22k ohm
R1155	119-2231-15	1/16W 22k ohm
R1156	119-2231-15	1/16W 22k ohm
R1157	119-2231-15	1/16W 22k ohm
R1158	119-4731-15	1/16W 47k ohm
R1159	032-0140-50	1/16W 10k ohm F
R1160	032-0140-50	1/16W 10k ohm F
R1161	032-0140-50	1/16W 10k ohm F
R1162	032-0140-50	1/16W 10k ohm F
R1163	032-0140-50	1/16W 10k ohm F
R1164	032-0140-50	1/16W 10k ohm F
R1165	032-0140-50	1/16W 10k ohm F
R1166	032-0140-50	1/16W 10k ohm F
R1167	032-0140-56	1/16W 51k ohm F
R1168	032-0140-56	1/16W 51k ohm F
R1169	032-0140-56	1/16W 51k ohm F
R1170	032-0140-56	1/16W 51k ohm F
R1171	032-0140-56	1/16W 51k ohm F
R1172	032-0140-56	1/16W 51k ohm F
R1173	032-0140-56	1/16W 51k ohm F
R1174	032-0140-56	1/16W 51k ohm F
R1176	119-0000-05	1/16W 0 ohm JW
R1177	119-1021-15	1/16W 1k ohm
R1178	119-2231-15	1/16W 22k ohm
R1180	119-1021-15	1/16W 1k ohm
R1181	119-1831-15	1/16W 18k ohm
R1182	119-2231-15	1/16W 22k ohm
R1183	119-2231-15	1/16W 22k ohm
R1184	119-3311-15	1/16W 330 ohm
R1185	119-3311-15	1/16W 330 ohm
R1186	119-1021-15	1/16W 1k ohm
R1187	119-1021-15	1/16W 1k ohm
R1188	119-3311-15	1/16W 330 ohm
R1189	119-3311-15	1/16W 330 ohm
R1190	119-2231-15	1/16W 22k ohm
R1191	119-2231-15	1/16W 22k ohm
R1192	119-3311-15	1/16W 330 ohm
R1193	119-3311-15	1/16W 330 ohm
R1194	119-1021-15	1/16W 1k ohm
R1195	119-1021-15	1/16W 1k ohm
R1196	119-3311-15	1/16W 330 ohm
R1197	119-3311-15	1/16W 330 ohm
R1198	119-1021-15	1/16W 1k ohm
R1199	119-1021-15	1/16W 1k ohm
R1200	116-2291-15	1/8W 2.2 ohm
R1201	116-2291-15	1/8W 2.2 ohm
R1202	116-2291-15	1/8W 2.2 ohm
R1203	116-2291-15	1/8W 2.2 ohm
R1204	119-1021-15	1/16W 1k ohm
R1205	119-1021-15	1/16W 1k ohm
R1206	119-1021-15	1/16W 1k ohm
R1207	119-1021-15	1/16W 1k ohm
S601	013-3949-00	SKHHLV
S1001	013-5102-00	620454
SUP501	060-0122-20	DSP-141N-S00B
TM501	073-0762-90	TERMINAL
X501	061-1066-00	7.2MHz
X601	060-1505-50	10MHz

Main PWB(B2) section

REF No.	PART No.	DESCRIPTION
C1	168-1042-78	16V0.1uF
C2	168-1042-78	16V0.1uF
C3	172-1041-11	0.1uF
C4	184-1083-32	16V1000uF
C6	172-1041-11	0.1uF
C7	168-1042-78	16V0.1uF
C8	163-1073-35	16V100uF
C9	168-1042-78	16V0.1uF

REF No.	PART No.	DESCRIPTION
C10	168-1042-78	16V0.1uF
C11	042-0643-51	16V100uF
C12	042-0559-00	5.5V0.1uF
C13	163-4763-35	16V47uF
C14	042-0627-90	16V100uF
C15	042-0627-90	16V100uF
C16	168-1042-78	16V0.1uF
C17	168-1042-78	16V0.1uF

REF No.	PART No.	DESCRIPTION
C18	168-1042-78	16V0.1uF
C19	168-1042-78	16V0.1uF
C20	168-1042-78	16V0.1uF
C21	168-1042-78	16V0.1uF
C22	042-0643-51	16V100uF
C23	168-1042-78	16V0.1uF
C24	042-0643-51	16V100uF
C25	168-1042-78	16V0.1uF

REF No.	PART No.	DESCRIPTION
C26	042-0643-51	16V100uF
C27	168-1042-78	16V0.1uF
C28	168-1042-78	16V0.1uF
C29	168-1042-78	16V0.1uF
C30	042-0643-51	16V100uF
C31	042-0627-90	16V100uF
C32	168-1042-78	16V0.1uF
C33	042-0627-90	16V100uF
C34	168-1042-78	16V0.1uF
C35	168-1042-78	16V0.1uF
C36	042-0635-51	16V39uF
C37	163-2273-25	10V220uF
C38	168-1042-78	16V0.1uF
C39	168-1042-78	16V0.1uF
C40	168-1042-78	16V0.1uF
C41	168-1042-78	16V0.1uF
C42	042-0416-57	10V47uF
C43	042-0416-57	10V47uF
C50	168-2212-55	220pF
C51	168-1022-55	1000pF
C52	168-4712-55	470pF
C53	168-2212-55	220pF
C54	168-4712-55	470pF
C55	168-2212-55	220pF
C56	042-0416-57	10V47uF
C57	168-1042-78	16V0.1uF
C58	168-1042-78	16V0.1uF
C59	168-1032-55	0.01uF
C60	168-1032-55	0.01uF
C61	168-2212-55	220pF
C62	168-1042-78	16V0.1uF
C63	168-3332-78	0.033uF
C64	168-1042-78	16V0.1uF
C65	168-1042-78	16V0.1uF
C66	042-0567-53	6.3V10uF
C67	168-1042-78	16V0.1uF
C68	168-4712-55	470pF
C69	168-1042-78	16V0.1uF
C70	168-1042-78	16V0.1uF
C71	042-0416-52	10V10uF TAN
C72	168-1042-78	16V0.1uF
C73	168-2212-55	220pF
C74	178-1052-78	1 μF
C75	168-1022-55	1000pF
C76	168-1022-55	1000pF
C101	168-1042-78	16V0.1uF
C102	042-0416-57	10V47uF
C103	168-1042-78	16V0.1uF
C104	042-0416-57	10V47uF
C105	168-1042-78	16V0.1uF
C106	168-1042-78	16V0.1uF
C107	168-1042-78	16V0.1uF
C108	042-0416-57	10V47uF
C109	168-1042-78	16V0.1uF
C110	168-1042-78	16V0.1uF
C111	168-1042-78	16V0.1uF
C112	168-1042-78	16V0.1uF
C113	168-1042-78	16V0.1uF
C114	168-1042-78	16V0.1uF
C115	168-1042-78	16V0.1uF
C116	168-1042-78	16V0.1uF
C117	168-1042-78	16V0.1uF
C118	166-5611-50	560pF CH
C119	168-1042-78	16V0.1uF
C120	042-0416-57	10V47uF
C121	166-5601-54	560pF TH
C122	168-1042-78	16V0.1uF
C123	168-3322-55	3300pF
C124	168-1042-78	16V0.1uF
C125	168-1042-78	16V0.1uF
C126	042-0567-53	6.3V10uF
C127	042-0567-53	6.3V10uF
C150	163-1073-35	16V100uF
C151	163-1063-35	16V10uF

REF No.	PART No.	DESCRIPTION
C152	176-2221-50	2200pF CH
C153	166-1021-50	1000pF CH
C154	042-0423-94	10V4.7uF
C155	163-4763-35	16V47uF
C156	042-0643-50	35V22uF
C157	042-0452-01	10V220uF
C158	042-0643-50	35V22uF
C159	042-0643-50	35V22uF
C160	163-3363-45	25V33uF
C161	163-3373-15	6.3V330uF
C162	042-0416-57	10V47uF
C163	163-1073-35	16V100uF
C164	163-1073-35	16V100uF
C180	168-1042-78	16V0.1uF
C201	168-1042-78	16V0.1uF
C202	168-1042-78	16V0.1uF
C203	042-0567-53	6.3V10uF
C204	042-0567-53	6.3V10uF
C205	168-1042-78	16V0.1uF
C206	042-0567-53	6.3V10uF
C207	042-0567-53	6.3V10uF
C208	168-1042-78	16V0.1uF
C209	163-1063-35	16V10uF
C210	163-1063-35	16V10uF
C211	163-1063-35	16V10uF
C212	163-1063-35	16V10uF
C213	166-8211-50	820pF
C214	166-8211-50	820pF
C215	168-1042-78	16V0.1uF
C216	168-1042-78	16V0.1uF
C217	166-1011-50	100pF CH
C218	166-1011-50	100pF CH
C219	042-0416-57	10V47uF
C220	168-1042-78	16V0.1uF
C221	163-1063-35	16V10uF
C222	163-1063-35	16V10uF
C223	163-1063-35	16V10uF
C224	163-1063-35	16V10uF
C240	168-1042-78	16V0.1uF
C241	168-1042-78	16V0.1uF
C242	042-0416-57	10V47uF
C243	168-1042-78	16V0.1uF
C244	168-1042-78	16V0.1uF
C246	168-1042-78	16V0.1uF
C247	168-1042-78	16V0.1uF
C248	168-1042-78	16V0.1uF
C249	168-1042-78	16V0.1uF
C250	168-1042-78	16V0.1uF
C251	168-1042-78	16V0.1uF
C252	168-1042-78	16V0.1uF
C253	042-0416-57	10V47uF
C254	168-1032-55	0.01uF
C255	042-0567-53	6.3V10uF
C256	168-1032-55	0.01uF
C257	178-1052-78	1uF
C258	168-1042-78	16V0.1uF
C259	178-1052-78	1uF
C260	168-1042-78	16V0.1uF
C261	168-1035-56	0.01uF
C262	184-1083-12	6.3V1000uF
C263	168-1042-78	16V0.1uF
C271	184-1073-32	16V100uF
C279	168-1032-55	0.01uF
C280	168-1042-78	16V0.1uF
C281	168-1042-78	16V0.1uF
C290	043-0296-50	0.1uF
C291	043-0296-50	0.1uF
C292	184-1073-32	16V100uF
C301	042-0416-57	10V47uF
C302	168-1042-78	16V0.1uF
C303	168-1042-78	16V0.1uF
C304	168-1042-78	16V0.1uF
C305	168-1042-78	16V0.1uF
C306	042-0567-53	6.3V10uF

REF No.	PART No.	DESCRIPTION
C307	168-1042-78	16V0.1uF
C308	168-1042-78	16V0.1uF
C309	168-1042-78	16V0.1uF
C310	168-1042-78	16V0.1uF
C311	168-1042-78	16V0.1uF
C312	168-1042-78	16V0.1uF
C313	168-1042-78	16V0.1uF
C314	168-1042-78	16V0.1uF
C315	042-0567-53	6.3V10uF
C316	166-2201-50	22pF CH
C317	042-0567-53	6.3V10uF
C318	168-1042-78	16V0.1uF
C319	168-1042-78	16V0.1uF
C320	168-1042-78	16V0.1uF
C321	168-1042-78	16V0.1uF
C322	168-1042-78	16V0.1uF
C323	168-1042-78	16V0.1uF
C324	168-1042-78	16V0.1uF
C325	168-1042-78	16V0.1uF
C326	168-1042-78	16V0.1uF
C327	168-1042-78	16V0.1uF
C328	168-1045-56	0.1uF
C329	042-0567-53	6.3V10uF
C330	042-0567-53	6.3V10uF
C331	168-1042-78	16V0.1uF
C332	168-1042-78	16V0.1uF
C333	168-1042-78	16V0.1uF
C334	168-1042-78	16V0.1uF
C335	168-1042-78	16V0.1uF
C336	168-1042-78	16V0.1uF
C337	168-1042-78	16V0.1uF
C338	168-1042-78	16V0.1uF
C339	168-1042-78	16V0.1uF
C340	168-1042-78	16V0.1uF
C341	168-1042-78	16V0.1uF
C342	168-1042-78	16V0.1uF
C343	168-1042-78	16V0.1uF
C346	042-0567-53	6.3V10uF
C347	042-0567-53	6.3V10uF
C348	168-1042-78	16V0.1uF
C349	168-1042-78	16V0.1uF
C350	168-1042-78	16V0.1uF
C351	168-1042-78	16V0.1uF
C352	168-1042-78	16V0.1uF
C353	168-1042-78	16V0.1uF
C354	168-1042-78	16V0.1uF
C355	166-9097-50	9pF CH
C356	166-9097-50	9pF CH
C357	168-1042-78	16V0.1uF
C358	168-1042-78	16V0.1uF
C359	168-1042-78	16V0.1uF
C360	042-0567-53	6.3V10uF
C361	042-0416-57	10V47uF
C371	168-2212-55	220pF
C372	168-1042-78	16V0.1uF
CCT50	050-0122-50	1/16W 10k ohmx4 J
CCT51	050-0122-53	1/16W 1k ohmx4 J
CCT52	050-0122-58	1/16W 470 ohmx4 J
CCT53	050-0122-58	1/16W 470 ohmx4 J
CCT54	050-0140-52	1/32W 100 ohmx4 J
CCT55	050-0140-52	1/32W 100 ohmx4 J
CCT56	050-0140-52	1/32W 100 ohmx4 J
CCT57	050-0140-52	1/32W 100 ohmx4 J
CCT58	050-0140-58	470 ohmx4
CCT101	050-0122-51	1/16W 47k ohmx4 J
CCT102	050-0122-51	1/16W 47k ohmx4 J
CCT103	050-0140-58	470 ohmx4
CCT104	050-0140-58	470 ohmx4
CCT105	050-0140-58	470 ohmx4
CCT106	050-0140-58	470 ohmx4
CCT107	050-0140-58	470 ohmx4
CCT108	050-0122-51	1/16W 47k ohmx4 J
CCT109	050-0122-51	1/16W 47k ohmx4 J
CCT110	050-0140-58	470 ohmx4

REF No.	PART No.	DESCRIPTION
CCT111	050-0140-58	470 ohmx4
CCT112	050-0140-58	470 ohmx4
CCT113	050-0140-58	470 ohmx4
CCT114	050-0140-58	470 ohmx4
CCT115	050-0140-58	470 ohmx4
CCT116	050-0140-58	470 ohmx4
CCT120	050-0140-58	470 ohmx4
CCT121	050-0140-58	470 ohmx4
CCT122	050-0140-58	470 ohmx4
CCT123	050-0140-58	470 ohmx4
CCT301	050-0140-70	10 ohmx4
CCT302	050-0140-70	10 ohmx4
CCT303	050-0140-70	10 ohmx4
CCT304	050-0140-59	1/32W 33 ohmx4J
CCT305	050-0140-52	1/32W 100 ohmx4J
CCT306	050-0140-59	1/32W 33 ohmx4J
CCT307	050-0140-59	1/32W 33 ohmx4J
CCT308	050-0140-59	1/32W 33 ohmx4J
CCT309	050-0140-59	1/32W 33 ohmx4J
CCT310	050-0140-59	1/32W 33 ohmx4J
CCT311	050-0140-59	1/32W 33 ohmx4J
CCT312	050-0140-59	1/32W 33 ohmx4J
CCT313	050-0140-59	1/32W 33 ohmx4J
CCT314	050-0140-52	1/32W 100 ohmx4J
CCT315	050-0140-69	1/32W 56 ohmx4J
CCT316	050-0140-69	1/32W 56 ohmx4J
D1	001-0516-90	MA111
D2	001-0516-90	MA111
D3	001-0516-90	MA111
D4	001-0516-90	MA111
D5	001-0537-90	SFPM-62
D6	001-0537-90	SFPM-62
D8	001-0516-90	MA111
D12	001-0516-90	MA111
D13	001-0516-90	MA111
D50	001-0525-90	IMN10
D51	001-0525-90	IMN10
D52	001-0529-28	MA8051-L
D80	001-0188-01	1S1885A
D150	001-0516-90	MA111
D151	001-2606-90	M1FS4
D152	001-2606-90	M1FS4
D153	001-0516-90	MA111
D240	001-0367-91	1SS226
D241	001-0367-91	1SS226
D290	001-0529-39	MA8068-H
D291	001-0529-47	MA8091-M
FIL240	060-3102-91	NFM51R00P206
IC1	051-7243-48	SN74AHCT1G08DCKR
IC2	051-1905-93	AN77L06M
IC3	051-5420-08	S-80943ANMP-DD7-T2
IC4	051-1905-91	AN77L05M
IC5	051-3271-90	PQ07VZ012Z
IC6	051-3246-90	BA033FP
IC7	051-1905-92	AN77L09M
IC9	051-3294-90	TA78DS10F
IC50	051-5420-08	S-80943ANMP-DD7-T2
IC51	051-9400-28	BR93LC46F-WE2
IC52	051-6600-38	CA0008AM
IC53	051-5440-08	S-80931ANMP-DDV-T2
IC54	052-7062-01	uPD703037AGF-A14-3BA
IC101	051-3263-90	NJU7200U33
IC102	051-7513-08	HD74LV541A
IC103	052-7063-01	MR27V1602F-OHCTP
IC104	051-7513-08	HD74LV541A
IC105	051-7513-08	HD74LV541A
IC106	051-6437-00	YGV608F
IC107	051-7262-08	SN74AHC2G14HD

REF No.	PART No.	DESCRIPTION
		CTR
IC108	051-7275-08	TC7W32FU TE12L
IC109	051-1485-08	MC74HC4046AF
IC150	051-3903-90	NJM2368M
IC180	051-7510-08	SN74LV4053APWR
IC201	051-6387-08	PCM1720E
IC202	051-3034-90	NJM4558V
IC203	051-3034-90	NJM4558V
IC240	051-6442-00	ADV7170SU
IC241	051-5331-90	MM1228XFBE
IC242	051-5306-90	MM1117XF
IC243	051-7222-08	TC7SH08F-EL
IC270	051-5306-90	MM1117XF
IC290	051-1014-00	TA7291P
IC291	051-1014-00	TA7291P
IC301	051-7274-08	SN74AHCT574PWR
IC302	051-7256-08	SN74AHCT1G32 DCKR
IC303	051-9325-00	EM636165TS-6
IC304	051-9325-00	EM636165TS-6
IC305	052-6058-00	MR27V802D-37TPZA00
IC306	051-6441-00	ES4408FD
IC307	051-7260-08	TC7WT125FUTE12L
IC308	051-9406-18	BR24C01AF-W-E2
IC309	051-1443-09	TC7WU04F
IC316	051-7260-08	TC7WT125FUTE12L
J1	074-1125-02	2P
J3	074-1100-68	18P
J4	075-0385-00	JACK
J50	074-1287-70	20P
J51	074-1189-95	45P
J101	074-1189-00	50P
J201	074-1189-95	45P
J270	074-1189-00	50P
J271	074-1205-00	50P
J301	074-1205-00	50P
L50	010-2279-50	4.7uH
L51	010-2279-50	4.7uH
L52	010-2285-65	BLM11P300SPT
L101	010-2279-50	4.7uH
L102	010-2279-50	4.7uH
L103	010-2279-50	4.7uH
L104	010-2279-50	4.7uH
L105	010-2285-51	BLM21A05PT
L106	010-2285-51	BLM21A05PT
L107	010-2285-51	BLM21A05PT
L150	010-3057-90	100uH
L151	010-2199-86	100uH J
L152	010-2199-86	100uH J
L153	010-2199-86	100uH J
L154	010-3057-90	100uH
L201	010-2279-50	4.7uH
L240	010-2279-50	4.7uH
L241	010-2279-50	4.7uH
L301	010-2285-65	BLM11P300SPT
P2	076-0488-02	2P
P3	076-0276-05	5P
P4	076-0576-15	15P
P50	076-0478-52	2P
Q1	192-2712-00	2SC2712
Q2	101-1143-00	2SB1143
Q3	190-1162-00	2SA1162
Q4	192-2712-00	2SC2712
Q5	192-2712-00	2SC2712
Q6	190-1736-00	2SA1736
Q7	125-2004-92	RN1402
Q8	190-1431-00	2SA1431
Q9	125-2004-96	RN1406
Q10	101-1143-00	2SB1143
Q11	190-1736-00	2SA1736
Q12	125-2024-95	RN1605
Q13	101-1143-00	2SB1143
Q17	190-1428-00	2SA1428

REF No.	PART No.	DESCRIPTION
Q18	125-2004-96	RN1406
Q19	190-1298-00	2SA1298
Q20	125-2004-92	RN1402
Q50	125-2017-97	RN1427
Q51	125-2017-97	RN1427
Q52	125-2004-96	RN1406
Q53	125-0002-92	RN2402
Q54	125-2004-92	RN1402
Q55	125-2004-96	RN1406
Q56	101-1143-00	2SB1143
Q101	125-0002-95	RN2405
Q102	125-2004-92	RN1402
Q150	190-1736-00	2SA1736
Q151	125-2004-96	RN1406
Q152	192-2873-00	2SC2873
Q201	125-9002-92	RN4602
Q202	125-4001-90	XN1504
Q290	125-2004-92	RN1402
R2	119-2211-15	1/16W 220 ohm
R5	119-1801-15	1/16W 18 ohm
R6	119-1031-15	1/16W 10k ohm
R7	119-4311-15	1/16W 430 ohm
R8	119-1031-15	1/16W 10k ohm
R9	119-7501-15	1/16W 75 ohm
R10	119-7501-15	1/16W 75 ohm
R11	119-7501-15	1/16W 75 ohm
R12	119-7501-15	1/16W 75 ohm
R13	119-1501-15	1/16W 15 ohm
R14	032-0140-93	1/10W 2k ohm
R15	032-0140-62	1/16W 1k ohm F
R16	032-0140-88	1/16W 100k ohm F
R17	119-1511-15	1/16W 150 ohm
R18	119-1511-15	1/16W 150 ohm
R19	119-1511-15	1/16W 150 ohm
R20	119-1511-15	1/16W 150 ohm
R21	119-7501-15	1/16W 75 ohm
R22	119-7501-15	1/16W 75 ohm
R23	119-7501-15	1/16W 75 ohm
R24	119-1031-15	1/16W 10k ohm
R25	119-7501-15	1/16W 75 ohm
R26	119-7501-15	1/16W 75 ohm
R27	119-7501-15	1/16W 75 ohm
R28	119-2701-15	1/16W 27 ohm
R29	119-2701-15	1/16W 27 ohm
R30	119-2701-15	1/16W 27 ohm
R31	119-2701-15	1/16W 27 ohm
R32	119-2701-15	1/16W 27 ohm
R33	119-1031-15	1/16W 10k ohm
R34	119-1511-15	1/16W 150 ohm
R35	119-7501-15	1/16W 75 ohm
R36	119-1031-15	1/16W 10k ohm
R37	119-1821-15	1/16W 1.8k ohm
R51	119-1221-15	1/16W 1.2k ohm
R52	119-2231-15	1/16W 22k ohm
R53	119-2231-15	1/16W 22k ohm
R54	119-2231-15	1/16W 22k ohm
R55	119-4721-15	1/16W 4.7k ohm
R56	119-2231-15	1/16W 22k ohm
R57	119-1031-15	1/16W 10k ohm
R58	119-1031-15	1/16W 10k ohm
R59	119-1031-15	1/16W 10k ohm
R60	119-1031-15	1/16W 10k ohm
R61	119-4721-15	1/16W 4.7k ohm
R62	119-4711-15	1/16W 470 ohm
R63	119-1031-15	1/16W 10k ohm
R64	119-4731-15	1/16W 47k ohm
R65	119-4731-15	1/16W 47k ohm
R66	119-1031-15	1/16W 10k ohm
R67	119-1031-15	1/16W 10k ohm
R68	032-0140-61	1/16W 3k ohm F
R69	032-0140-57	1/16W 5.6k ohm F
R70	119-1541-15	1/16W 150k ohm
R71	119-1021-15	1/16W 1k ohm
R72	119-2231-15	1/16W 22k ohm

REF No.	PART No.	DESCRIPTION
R73	119-3321-15	1/16W 3.3k ohm
R74	032-0140-80	1/16W 18k ohm F
R75	119-1031-15	1/16W 10k ohm
R76	119-6831-15	1/16W 68k ohm
R77	032-0140-54	1/16W 22k ohm F
R78	119-1031-15	1/16W 10k ohm
R79	119-1031-15	1/16W 10k ohm
R80	119-1031-15	1/16W 10k ohm
R81	119-1031-15	1/16W 10k ohm
R82	119-4731-15	1/16W 47k ohm
R83	119-1031-15	1/16W 10k ohm
R84	119-1031-15	1/16W 10k ohm
R85	119-1031-15	1/16W 10k ohm
R86	119-1031-15	1/16W 10k ohm
R87	119-1031-15	1/16W 10k ohm
R88	119-1031-15	1/16W 10k ohm
R89	119-1031-15	1/16W 10k ohm
R90	119-1031-15	1/16W 10k ohm
R91	119-1031-15	1/16W 10k ohm
R92	119-1031-15	1/16W 10k ohm
R93	119-1031-15	1/16W 10k ohm
R94	119-1031-15	1/16W 10k ohm
R95	119-1021-15	1/16W 1k ohm
R96	119-2231-15	1/16W 22k ohm
R101	119-4711-15	1/16W 470 ohm
R102	119-4711-15	1/16W 470 ohm
R103	119-1011-15	1/16W 100 ohm
R104	119-4721-15	1/16W 4.7k ohm
R105	119-1021-15	1/16W 1k ohm
R106	119-3311-15	1/16W 330 ohm
R107	119-3311-15	1/16W 330 ohm
R108	119-3311-15	1/16W 330 ohm
R109	119-1211-15	1/16W 120 ohm
R110	119-1211-15	1/16W 120 ohm
R111	119-1211-15	1/16W 120 ohm
R112	119-1011-15	1/16W 100 ohm
R113	119-1021-15	1/16W 1k ohm
R114	119-2211-15	1/16W 220 ohm
R115	032-0140-61	1/16W 3k ohm F
R116	032-0140-69	1/16W 16k ohm F
R117	119-1021-15	1/16W 1k ohm
R118	119-2211-15	1/16W 220 ohm
R119	119-2211-15	1/16W 220 ohm
R150	119-1031-15	1/16W 10k ohm
R151	119-2011-15	1/16W 200 ohm
R152	119-2011-15	1/16W 200 ohm
R153	119-4721-15	1/16W 4.7k ohm
R154	119-2221-15	1/16W 2.2k ohm
R155	119-1001-15	1/16W 10 ohm
R156	119-6841-15	1/16W 680k ohm

REF No.	PART No.	DESCRIPTION
R157	119-3931-15	1/16W 39k ohm
R158	119-6841-15	1/16W 680k ohm
R159	119-2231-15	1/16W 22k ohm
R160	119-1841-15	1/16W 180k ohm
R161	119-3311-15	1/16W 330 ohm
R162	119-2011-15	1/16W 200 ohm
R163	119-2011-15	1/16W 200 ohm
R180	119-5131-15	1/16W 51k ohm
R181	119-5131-15	1/16W 51k ohm
R182	119-5131-15	1/16W 51k ohm
R183	119-5131-15	1/16W 51k ohm
R184	119-5131-15	1/16W 51k ohm
R185	119-5131-15	1/16W 51k ohm
R186	119-1011-15	1/16W 100 ohm
R187	119-1011-15	1/16W 100 ohm
R188	119-1011-15	1/16W 100 ohm
R189	119-1531-15	1/16W 15k ohm
R190	119-1531-15	1/16W 15k ohm
R191	119-1531-15	1/16W 15k ohm
R192	119-1531-15	1/16W 15k ohm
R193	119-1531-15	1/16W 15k ohm
R194	119-1531-15	1/16W 15k ohm
R201	119-2011-15	1/16W 200 ohm
R202	119-4731-15	1/16W 47k ohm
R203	119-4731-15	1/16W 47k ohm
R205	119-1021-15	1/16W 1k ohm
R206	119-3311-15	1/16W 330 ohm
R207	119-3311-15	1/16W 330 ohm
R208	119-1021-15	1/16W 1k ohm
R209	032-0140-50	1/16W 10k ohm F
R210	032-0140-50	1/16W 10k ohm F
R211	032-0140-57	1/16W 5.6k ohm F
R212	032-0140-57	1/16W 5.6k ohm F
R213	032-0140-50	1/16W 10k ohm F
R214	032-0140-50	1/16W 10k ohm F
R215	032-0140-50	1/16W 10k ohm F
R216	032-0140-50	1/16W 10k ohm F
R217	032-0140-50	1/16W 10k ohm F
R218	032-0140-50	1/16W 10k ohm F
R219	032-0140-50	1/16W 10k ohm F
R220	032-0140-56	1/16W 51k ohm F
R221	119-2211-15	1/16W 220 ohm
R222	119-2211-15	1/16W 220 ohm
R223	119-2211-15	1/16W 220 ohm
R224	119-2211-15	1/16W 220 ohm
R225	119-1041-15	1/16W 100k ohm
R226	119-1041-15	1/16W 100k ohm
R227	119-1041-15	1/16W 100k ohm
R228	119-1041-15	1/16W 100k ohm
R229	119-2211-15	1/16W 220 ohm

REF No.	PART No.	DESCRIPTION
R230	032-0140-70	1/10W 1.8k ohm
R241	119-1041-15	1/16W 100k ohm
R242	032-0140-11	1/10W 300 ohm
R243	119-7501-15	1/16W 75 ohm
R244	119-7501-15	1/16W 75 ohm
R245	119-7501-15	1/16W 75 ohm
R246	032-0140-12	1/10W 75 ohm
R247	119-7501-15	1/16W 75 ohm
R248	032-0140-12	1/10W 75 ohm
R249	119-4731-15	1/16W 47k ohm
R250	119-3301-15	1/16W 33 ohm
R251	119-3301-15	1/16W 33 ohm
R270	119-3331-15	1/16W 33k ohm
R271	119-3331-15	1/16W 33k ohm
R290	119-4711-15	1/16W 470 ohm
R305	119-3301-15	1/16W 33 ohm
R306	119-3301-15	1/16W 33 ohm
R307	119-3301-15	1/16W 33 ohm
R308	119-4721-15	1/16W 4.7k ohm
R309	119-4721-15	1/16W 4.7k ohm
R311	119-4721-15	1/16W 4.7k ohm
R312	119-4721-15	1/16W 4.7k ohm
R313	119-2201-15	1/16W 22 ohm
R314	119-1021-15	1/16W 1k ohm
R315	119-1031-15	1/16W 10k ohm
R317	119-1031-15	1/16W 10k ohm
R318	119-4701-15	1/16W 47 ohm
R320	119-3301-15	1/16W 33 ohm
R321	119-3301-15	1/16W 33 ohm
R322	119-3301-15	1/16W 33 ohm
R323	119-3301-15	1/16W 33 ohm
R324	119-3911-15	1/16W 390 ohm
R325	119-1051-15	1/16W 1M ohm
R326	119-7501-15	1/16W 75 ohm
R327	119-7501-15	1/16W 75 ohm
R328	119-7501-15	1/16W 75 ohm
R329	119-7501-15	1/16W 75 ohm
R330	119-4721-15	1/16W 4.7k ohm
R331	119-4721-15	1/16W 4.7k ohm
R345	119-1021-15	1/16W 1k ohm
R346	119-1021-15	1/16W 1k ohm
R347	119-4721-15	1/16W 4.7k ohm
R348	119-4721-15	1/16W 4.7k ohm
T150	007-1151-90	OUTPUT TRANS
VR101	012-6009-58	33k ohm
VR150	012-6009-52	1k ohm
X50	060-0100-01	CB13PA-215
X51	060-1519-90	12.583MHz
X301	061-3523-90	27MHz

LCD PWB(B3) section

REF No.	PART No.	DESCRIPTION
C701	168-1045-56	0.1uF
C704	168-1045-56	0.1uF
C705	163-3373-15	6.3V330uF
C707	178-1052-78	1uF
C708	168-1045-56	0.1uF
C709	042-0397-55	6.3V3.3uF TAN
C711	168-2232-55	0.022uF
C712	166-5601-50	56pF CH
C713	042-0416-54	16V10uF
C714	168-1032-55	0.01uF
C715	178-1052-78	1uF
C716	178-1052-78	1uF
C717	178-1052-78	1uF
C718	178-4742-78	0.47uF
C719	178-4742-78	0.47uF
C720	178-4742-78	0.47uF
C721	168-1032-55	0.01uF
C722	168-1032-55	0.01uF
C723	178-1052-78	1uF
C724	166-1201-50	12pF CH
C725	178-1052-78	1uF

REF No.	PART No.	DESCRIPTION
C726	166-8211-50	820pF
C727	166-2201-50	22pF CH
C728	178-1052-78	1uF
C729	168-1045-56	0.1uF
C730	168-6812-55	680pF
C731	168-1032-55	0.01uF
C732	168-1045-56	0.1uF
C733	168-1032-55	0.01uF
C734	168-4732-78	0.047uF
C735	168-1032-55	0.01uF
C736	168-1032-55	0.01uF
C737	168-1032-55	0.01uF
C738	166-8201-50	82pF CH
C739	178-1052-78	1uF
C740	168-1032-55	0.01uF
C741	178-1052-78	1uF
C742	168-1032-55	0.01uF
C743	168-1032-55	0.01uF
C744	178-1052-78	1uF
C745	178-1052-78	1uF
C746	178-1052-78	1uF

REF No.	PART No.	DESCRIPTION
C747	042-0416-57	10V47uF
C748	178-1052-78	1uF
C749	042-0397-53	25V0.47uF TAN
C750	168-1032-55	0.01uF
C753	168-1045-56	0.1uF
C754	168-1045-56	0.1uF
C755	168-1045-56	0.1uF
C756	168-1045-56	0.1uF
C757	168-1045-56	0.1uF
C758	168-1045-56	0.1uF
C759	168-1045-56	0.1uF
C760	042-0416-54	16V10uF
C761	168-1045-56	0.1uF
C762	178-1052-78	1uF
C763	042-0416-54	16V10uF
C764	168-1045-56	0.1uF
C765	042-0416-54	16V10uF
C766	178-1052-78	1uF
C767	166-5611-50	560pF CH
C768	168-1045-56	0.1uF
C769	168-1045-56	0.1uF

REF No.	PART No.	DESCRIPTION
C770	168-1045-56	0.1uF
C771	166-3301-50	33pF CH
C772	166-3301-50	33pF CH
C773	168-1045-56	0.1uF
C774	168-1022-55	1000pF
C775	168-1045-56	0.1uF
C776	168-1045-56	0.1uF
C777	168-1022-55	1000pF
C778	166-1011-50	100pF CH
C779	178-1052-78	1uF
C780	178-2242-78	0.22uF
C781	168-1045-56	0.1uF
C782	166-3911-50	390pF CH
C783	042-0416-54	16V10uF
C784	166-8201-50	82pF CH
C785	168-2212-55	220pF
C786	168-1045-56	0.1uF
C787	168-1045-56	0.1uF
C788	168-1045-56	0.1uF
C789	163-2263-55	35V22uF
C790	168-1045-56	0.1uF
C791	168-1045-56	0.1uF
C792	168-1045-56	0.1uF
C793	168-1045-56	0.1uF
C794	163-1063-35	16V10uF
C795	176-5601-52	56pF RH
C796	042-0595-65	16V47uF
C798	168-4732-78	0.047uF
C801	168-1045-56	0.1uF
C802	042-0416-57	10V47uF
C803	042-0416-57	10V47uF
C804	168-1045-56	0.1uF
C805	168-1022-55	1000pF
C806	168-1022-55	1000pF
C807	168-1022-55	1000pF
C808	168-1022-55	1000pF
C809	168-1022-55	1000pF
C810	168-1022-55	1000pF
C811	168-1022-55	1000pF
C812	166-1801-50	18pF CH
C813	166-1801-50	18pF CH
C814	168-1022-55	1000pF
C815	042-0416-57	10V47uF
C901	168-1045-56	0.1uF
C902	168-1045-56	0.1uF
C903	168-1045-56	0.1uF
C904	168-1532-55	0.015uF
C905	168-1045-56	0.1uF
C906	042-0416-54	16V10uF
C907	168-4712-55	470pF
C908	043-0504-51	10V 3.3uF
C909	168-1022-55	1000pF
C910	177-2252-78	16V2.2uF
C911	177-2252-78	16V2.2uF
C912	043-0510-50	16V 22uF
C913	168-1032-55	0.01uF
C914	043-0531-90	3000V 18pF
C915	168-2232-55	0.022uF
C916	043-0531-90	3000V 18pF
C917	043-0531-90	3000V 18pF
C918	168-1045-56	0.1uF
C919	168-1045-56	0.1uF
C920	168-1045-56	0.1uF
C921	042-0595-65	16V47uF
C922	042-0595-65	16V47uF
CCT701	050-0122-58	1/16W 470 ohmx4 J
CCT702	050-0122-58	1/16W 470 ohmx4 J
CCT703	050-0122-60	1/16W 33 ohmx4 J
CCT704	050-0122-58	1/16W 470 ohmx4 J
CCT705	050-0122-60	1/16W 33 ohmx4 J
CCT801	050-0122-50	1/16W 10k ohmx4 J
CCT802	050-0122-53	1/16W 1k ohmx4 J
CCT803	050-0122-53	1/16W 1k ohmx4 J
CCT804	050-0122-53	1/16W 1k ohmx4 J

REF No.	PART No.	DESCRIPTION
CCT805	050-0122-51	1/16W 47k ohmx4 J
D701	001-0354-91	MA151WK
D702	001-3211-90	MA335-TX
D703	001-0367-91	1SS226
D704	001-0529-29	MA8051-M
D705	001-0529-49	MA8100-L
D803	001-0516-90	MA111
D804	001-0516-90	MA111
D805	001-0516-90	MA111
D806	001-0516-90	MA111
D810	001-0516-90	MA111
D811	001-0516-90	MA111
D812	001-0516-90	MA111
D813	001-0516-90	MA111
D814	001-0516-90	MA111
D815	001-0516-90	MA111
D816	001-0516-90	MA111
D817	001-0516-90	MA111
D901	001-0529-29	MA8051-M
D902	001-0541-90	MA157
D903	001-0541-90	MA157
F701	060-8023-52	0.75A
IC701	051-7202-18	TC7S32FU-TE85L
IC702	051-6435-08	M62354FP-70ND
IC703	051-5313-10	IR3Y29BM
IC704	051-1527-08	TC4W53F
IC705	051-1292-90	NJM4565M-D
IC706	051-3025-90	NJM2107F
IC707	051-6042-00	LZ9GJ18
IC708	051-5417-08	S-80927ANMP-DDQ
IC801	052-7055-20	NZX0100-1801L
IC901	051-3916-90	OZ965
IC902	051-3040-90	NJM2125F
J701	074-1189-85	35P
J702	074-1205-82	32P
J801	074-1189-95	45P
J802	074-1275-58	8P
L701	010-2199-83	56uH J
L702	010-3200-90	T621B
L703	010-2199-80	33uH J
L704	010-2199-74	10uH J
L705	010-2323-70	15uH
L706	010-2323-59	2.7uH
L707	010-2199-66	2.2uH J
L801	010-2199-82	47uH J
L901	010-3059-90	ZJYS51R5-2P-G
P801	076-0645-80	30P
P802	076-0663-64	14P
P901	076-0529-04	4P
Q701	190-1738-00	2SA1738
Q702	125-0002-93	RN2403
Q703	192-3326-00	2SC3326
Q704	125-0002-92	RN2402
Q705	192-2712-00	2SC2712
Q706	125-2004-92	RN1402
Q707	190-1738-00	2SA1738
Q708	125-2037-90	XN1211
Q709	125-2004-92	RN1402
Q710	192-2712-00	2SC2712
Q711	190-1736-00	2SA1736
Q712	125-2004-96	RN1406
Q713	125-2004-96	RN1406
Q801	125-2004-96	RN1406
Q802	125-2004-96	RN1406
Q803	125-2004-95	RN1405
Q804	125-0002-95	RN2405
Q805	125-0002-95	RN2405
Q806	125-2004-95	RN1405
Q807	125-2004-96	RN1406
Q808	125-2017-97	RN1427
Q809	125-2017-97	RN1427
Q810	125-2004-96	RN1406
Q901	190-1461-00	2SA1461
Q902	125-2004-93	RN1403

REF No.	PART No.	DESCRIPTION
Q903	192-3734-00	2AC3734
Q904	192-3734-00	2AC3734
Q905	192-3734-00	2AC3734
Q906	190-1461-00	2SA1461
Q907	125-9018-90	HAT3010
R701	119-4711-15	1/16W 470 ohm
R702	119-4721-15	1/16W 4.7k ohm
R703	119-1021-15	1/16W 1k ohm
R704	119-1021-15	1/16W 1k ohm
R705	119-1031-15	1/16W 10k ohm
R706	119-3341-15	1/16W 330k ohm
R707	119-2231-15	1/16W 22k ohm
R708	119-2221-15	1/16W 2.2k ohm
R709	119-3321-15	1/16W 3.3k ohm
R710	119-6821-15	1/16W 6.8k ohm
R711	119-2431-15	1/16W 24k ohm
R712	119-2221-15	1/16W 2.2k ohm
R713	119-3331-15	1/16W 33k ohm
R714	119-2231-15	1/16W 22k ohm
R715	119-2231-15	1/16W 22k ohm
R716	119-2231-15	1/16W 22k ohm
R717	119-2731-15	1/16W 27k ohm
R718	119-2221-15	1/16W 2.2k ohm
R719	119-5631-15	1/16W 56k ohm
R720	119-3931-15	1/16W 39k ohm
R721	032-0092-63	1/10W 18k ohm F
R722	119-3341-15	1/16W 330k ohm
R723	119-5621-15	1/16W 5.6k ohm
R724	119-1021-15	1/16W 1k ohm
R725	119-5611-15	1/16W 560 ohm
R726	119-1021-15	1/16W 1k ohm
R727	119-3351-15	1/16W 3.3M ohm
R728	119-3931-15	1/16W 39k ohm
R729	119-2231-15	1/16W 22k ohm
R730	119-3931-15	1/16W 39k ohm
R731	119-2231-15	1/16W 22k ohm
R732	119-4731-15	1/16W 47k ohm
R733	119-2231-15	1/16W 22k ohm
R734	119-1051-15	1/16W 1M ohm
R735	119-6821-15	1/16W 6.8k ohm
R736	119-4731-15	1/16W 47k ohm
R737	119-2731-15	1/16W 27k ohm
R738	119-5621-15	1/16W 5.6k ohm
R739	119-1521-15	1/16W 1.5k ohm
R740	119-4731-15	1/16W 47k ohm
R741	119-3331-15	1/16W 33k ohm
R742	119-1011-15	1/16W 100 ohm
R743	119-1011-15	1/16W 100 ohm
R744	119-1011-15	1/16W 100 ohm
R745	119-6811-15	1/16W 680 ohm
R746	119-5621-15	1/16W 5.6k ohm
R747	119-2221-15	1/16W 2.2k ohm
R748	119-8221-15	1/16W 8.2k ohm
R749	119-1521-15	1/16W 1.5k ohm
R750	119-3311-15	1/16W 330 ohm
R751	119-1001-15	1/16W 10 ohm
R752	119-1531-15	1/16W 15k ohm
R753	119-1031-15	1/16W 10k ohm
R754	119-1031-15	1/16W 10k ohm
R755	119-3301-15	1/16W 33 ohm
R756	119-3301-15	1/16W 33 ohm
R757	119-4721-15	1/16W 4.7k ohm
R758	119-2221-15	1/16W 2.2k ohm
R759	119-2731-15	1/16W 27k ohm
R760	119-4731-15	1/16W 47k ohm
R761	032-0092-33	1/10W 3.6k ohm F
R762	032-0092-58	1/10W 4.7k ohm F
R763	119-4731-15	1/16W 47k ohm
R764	119-6831-15	1/16W 68k ohm
R765	119-4331-15	1/16W 43k ohm
R766	119-1051-15	1/16W 1M ohm
R767	119-1051-15	1/16W 1M ohm
R768	119-6831-15	1/16W 68k ohm
R769	119-2711-15	1/16W 270 ohm

REF No.	PART No.	DESCRIPTION
R770	119-2421-15	1/16W 2.4k ohm
R771	119-1031-15	1/16W 10k ohm
R772	119-1031-15	1/16W 10k ohm
R773	119-5641-15	1/16W 560k ohm
R774	119-5641-15	1/16W 560k ohm
R775	119-2721-15	1/16W 2.7k ohm
R776	119-3321-15	1/16W 3.3k ohm
R777	119-2241-15	1/16W 220k ohm
R778	119-1011-15	1/16W 100 ohm
R779	119-3311-15	1/16W 330 ohm
R780	119-3331-15	1/16W 33k ohm
R781	119-1001-15	1/16W 10 ohm
R782	119-1031-15	1/16W 10k ohm
R783	119-2431-15	1/16W 24k ohm
R784	119-2231-15	1/16W 22k ohm
R785	032-0106-63	1/10W 47k ohm D
R786	032-0106-61	1/10W 22k ohm D
R787	119-1031-15	1/16W 10k ohm
R788	119-3321-15	1/16W 3.3k ohm
R789	119-3321-15	1/16W 3.3k ohm
R790	119-3921-15	1/16W 3.9k ohm
R791	119-3321-15	1/16W 3.3k ohm
R792	119-3321-15	1/16W 3.3k ohm
R793	119-5601-15	1/16W 56 ohm
R794	119-3321-15	1/16W 3.3k ohm
R795	119-5641-15	1/16W 560k ohm
R801	119-4711-15	1/16W 470 ohm

REF No.	PART No.	DESCRIPTION
R802	119-1021-15	1/16W 1k ohm
R803	119-4721-15	1/16W 4.7k ohm
R804	119-4721-15	1/16W 4.7k ohm
R805	119-4721-15	1/16W 4.7k ohm
R807	119-4711-15	1/16W 470 ohm
R808	119-4711-15	1/16W 470 ohm
R809	119-4731-15	1/16W 47k ohm
R810	119-3321-15	1/16W 3.3k ohm
R811	119-4731-15	1/16W 47k ohm
R812	119-4731-15	1/16W 47k ohm
R813	119-1521-15	1/16W 1.5k ohm
R814	119-4711-15	1/16W 470 ohm
R815	119-4711-15	1/16W 470 ohm
R820	119-4731-15	1/16W 47k ohm
R901	119-5631-15	1/16W 56k ohm
R902	119-6831-15	1/16W 68k ohm
R903	119-3331-15	1/16W 33k ohm
R904	119-2731-15	1/16W 27k ohm
R905	119-2731-15	1/16W 27k ohm
R906	119-6831-15	1/16W 68k ohm
R907	119-4731-15	1/16W 47k ohm
R908	119-1231-15	1/16W 12k ohm
R909	119-3021-15	1/16W 3k ohm
R910	119-3911-15	1/16W 390 ohm
R911	119-3911-15	1/16W 390 ohm
R912	119-7531-15	1/16W 75k ohm
R913	119-5631-15	1/16W 56k ohm

REF No.	PART No.	DESCRIPTION
R914	119-1041-15	1/16W 100k ohm
R915	119-5631-15	1/16W 56k ohm
R916	119-1021-15	1/16W 1k ohm
R917	119-3321-15	1/16W 3.3k ohm
R918	119-3301-15	1/16W 33 ohm
R919	119-1001-15	1/16W 10 ohm
R920	119-1051-15	1/16W 1M ohm
R921	119-3611-15	1/16W 360 ohm
R922	119-3911-15	1/16W 390 ohm
R923	119-3911-15	1/16W 390 ohm
R924	119-2201-15	1/16W 22 ohm
T901	007-1163-01	OUTPUT TRANS
TM701	073-0768-90	TERMIMAL
TM801	073-0768-90	TERMIMAL
VR701	012-6009-58	33k ohm
VR702	012-6009-58	33k ohm
VR703	012-6009-58	33k ohm
VR704	012-6009-58	33k ohm
VR705	012-6009-58	33k ohm
VR706	012-4997-56	10K ohm-B
VR707	012-6009-56	10k ohm
VR708	012-6009-61	100k ohm
X701	061-3520-95	3.57945MHz
X702	061-3524-90	4.433618MHz
X801	061-3521-90	4.9152MHz

Inner switch PWB(B4) section

REF No.	PART No.	DESCRIPTION
C401	178-1055-79	1uF
C402	168-4712-55	470pF
C403	168-2222-55	2200pF
C404	168-4712-55	470pF
D401	001-0516-90	MA111
D402	001-0529-36	MA8062-H
D403	001-0516-90	MA111
D404	001-0529-36	MA8062-H
D405	001-0529-36	MA8062-H
D406	001-0529-36	MA8062-H
D407	001-7031-98	EB1112H-15
D408	001-7031-98	EB1112H-15
IR401	060-4008-00	RS171
J401	074-1287-70	20P
Q401	192-2712-00	2SC2712
R118	119-1521-15	1/16W 1.5k ohm
R119	119-1521-15	1/16W 1.5k ohm
R401	119-1221-15	1/16W 1.2k ohm

REF No.	PART No.	DESCRIPTION
R402	119-1221-15	1/16W 1.2k ohm
R403	119-1521-15	1/16W 1.5k ohm
R404	119-1521-15	1/16W 1.5k ohm
R405	119-1521-15	1/16W 1.5k ohm
R406	119-1521-15	1/16W 1.5k ohm
R407	119-1521-15	1/16W 1.5k ohm
R408	119-1521-15	1/16W 1.5k ohm
R409	119-9111-15	1/16W 910 ohm
R410	119-9111-15	1/16W 910 ohm
R411	119-1021-15	1/16W 1k ohm
R412	119-1021-15	1/16W 1k ohm
R413	119-2711-15	1/16W 270 ohm
R414	119-2711-15	1/16W 270 ohm
R415	119-2231-15	1/16W 22k ohm
R416	119-4721-15	1/16W 4.7k ohm
R417	119-1521-15	1/16W 1.5k ohm
R419	119-2221-15	1/16W 2.2k ohm
R420	119-4701-15	1/16W 47 ohm

REF No.	PART No.	DESCRIPTION
S401	013-6519-50	LS9J2M-2SR/FG
S402	013-6519-50	LS9J2M-2SR/FG
S403	013-6519-50	LS9J2M-2SR/FG
S404	013-6519-50	LS9J2M-2SR/FG
S405	013-6519-50	LS9J2M-2SR/FG
S406	013-6519-50	LS9J2M-2SR/FG
S407	013-6519-50	LS9J2M-2SR/FG
S408	013-6519-50	LS9J2M-2SR/FG
S409	013-6519-50	LS9J2M-2SR/FG
S410	013-6519-50	LS9J2M-2SR/FG
S411	013-6519-50	LS9J2M-2SR/FG
S412	013-6507-50	LS8J2M-T
S413	013-6507-50	LS8J2M-T
S414	013-7411-50	ESE2131BTXN
S415	013-6507-50	LS8J2M-T
S416	013-6519-50	LS9J2M-2SR/FG

Panel switch PWB(B5) section

REF No.	PART No.	DESCRIPTION
D901	001-7045-94	CL-165SR/FG-D-P
D902	001-7045-94	CL-165SR/FG-D-P
D903	001-7045-94	CL-165SR/FG-D-P
D904	001-7045-94	CL-165SR/FG-D-P
D905	001-7045-94	CL-165SR/FG-D-P
D906	001-7045-94	CL-165SR/FG-D-P
D907	001-7045-94	CL-165SR/FG-D-P
D908	001-7045-94	CL-165SR/FG-D-P
D909	001-7045-94	CL-165SR/FG-D-P
J970	074-1276-80	30P
R970	119-2721-15	1/16W 2.7k ohm

REF No.	PART No.	DESCRIPTION
R971	119-2721-15	1/16W 2.7k ohm
R972	119-2721-15	1/16W 2.7k ohm
R973	119-2721-15	1/16W 2.7k ohm
R974	119-2721-15	1/16W 2.7k ohm
R975	119-2721-15	1/16W 2.7k ohm
R976	119-2221-15	1/16W 2.2k ohm
R977	119-2221-15	1/16W 2.2k ohm
R978	119-2221-15	1/16W 2.2k ohm
R979	119-3321-15	1/16W 3.3k ohm
R980	119-3321-15	1/16W 3.3k ohm
S970	013-6507-50	LS8J2M-T

REF No.	PART No.	DESCRIPTION
S971	013-6507-50	LS8J2M-T
S972	013-6507-50	LS8J2M-T
S973	013-6507-50	LS8J2M-T
S974	013-6507-50	LS8J2M-T
S975	013-6507-50	LS8J2M-T
S976	013-6519-50	LS9J2M-2SR/FG
S977	013-6519-50	LS9J2M-2SR/FG
S978	013-6507-50	LS8J2M-T
S979	013-6507-50	LS8J2M-T

Sub LCD PWB(B6) section

REF No.	PART No.	DESCRIPTION
C980	168-1045-56	0.1uF
C981	178-1052-78	1uF
C982	168-1045-56	0.1uF
D982	001-7055-90	NSCWS405T
D983	001-7055-90	NSCWS405T
D984	001-0584-20	MA8056
D985	001-0584-20	MA8056
IC980	051-5828-90	TPS819

REF No.	PART No.	DESCRIPTION
J980	074-1296-64	14P
R986	119-2721-15	1/16W 2.7k ohm
R987	119-2721-15	1/16W 2.7k ohm
R988	119-2221-15	1/16W 2.2k ohm
R989	119-2221-15	1/16W 2.2k ohm
R990	119-7501-15	1/16W 75 ohm
R991	119-7501-15	1/16W 75 ohm
R992	119-1031-15	1/16W 10k ohm

REF No.	PART No.	DESCRIPTION
R993	119-0000-05	1/16W 0 ohm JW
R994	119-4741-15	1/16W 470k ohm
S980	013-6522-50	LS9J2M-1UB-T
S981	013-6522-50	LS9J2M-1UB-T
S982	013-6519-50	LS9J2M-2SR/FG
S983	013-6519-50	LS9J2M-2SR/FG

DVD PWB(B7) section

REF No.	PART No.	DESCRIPTION
C101	178-1042-78	0.1uF
C102	178-1042-78	0.1uF
C103	042-0636-50	6.3V100uF
C104	042-0636-50	6.3V100uF
C105	042-0397-54	10V2.2uF TAN
C106	168-1042-78	0.1uF
C107	168-1032-55	0.01uF
C108	168-1032-55	0.01uF
C109	042-0416-52	10V10uF TAN
C110	042-0397-50	16V1uF TAN
C111	168-1042-78	0.1uF
C112	168-1042-78	0.1uF
C113	168-1022-55	1000pF
C114	168-1042-78	0.1uF
C115	168-1022-55	1000pF
C116	168-1022-55	1000pF
C117	168-1042-78	0.1uF
C118	042-0416-52	10V10uF TAN
C119	168-1032-55	0.01uF
C120	168-1032-55	0.01uF
C121	166-1007-50	10pF
C122	168-1032-55	0.01uF
C123	168-4722-55	4700pF
C124	168-4722-55	4700pF
C125	168-1042-78	0.1uF
C126	168-1042-78	0.1uF
C127	042-0416-52	10V10uF TAN
C128	168-1042-78	0.1uF
C129	168-1042-78	0.1uF
C130	168-3922-55	3900pF
C131	166-1007-50	10pF
C132	042-0416-02	10V10uF TAN
C133	168-1042-78	0.1uF
C134	168-3312-55	330pF
C135	168-1042-78	0.1uF
C202	168-1042-78	0.1uF
C203	168-1042-78	0.1uF
C204	168-1042-78	0.1uF
C206	168-1042-78	0.1uF
C207	168-1042-78	0.1uF
C208	168-1042-78	0.1uF
C209	168-1042-78	0.1uF
C210	168-1042-78	0.1uF
C211	168-1042-78	0.1uF
C212	168-1042-78	0.1uF
C301	168-3312-55	330pF
C302	168-3312-55	330pF
C303	168-1545-56	0.15uF
C304	168-1042-78	0.1uF
C305	168-1042-78	0.1uF
C306	168-1042-78	0.1uF
C307	168-1042-78	0.1uF
C308	168-1042-78	0.1uF
C309	168-1042-78	0.1uF
C310	168-1042-78	0.1uF
C311	168-6822-55	6800pF
C312	042-0416-52	10V10uF TAN
C313	168-3312-55	330pF
C314	168-3312-55	330pF
C315	166-1011-50	100pF
C316	168-1042-78	0.1uF
C317	168-4712-55	470pF
C318	168-4722-55	4700pF
C319	168-4722-55	4700pF
C320	168-1042-78	0.1uF
C321	168-1042-78	0.1uF
C322	168-3322-55	3300pF
C327	168-1042-78	0.1uF
C329	042-0416-52	10V10uF TAN
C332	168-1042-78	0.1uF
C333	168-1042-78	0.1uF
C334	168-1042-78	0.1uF
C335	168-1042-78	0.1uF

REF No.	PART No.	DESCRIPTION
C336	168-1022-55	1000pF
C337	168-1532-55	0.015uF
C338	168-1042-78	0.1uF
C339	168-1042-78	0.1uF
C340	168-1042-78	0.1uF
C341	168-1042-78	0.1uF
C342	168-1042-78	0.1uF
C343	168-2222-55	2200pF
C344	168-1042-78	0.1uF
C345	168-1042-78	0.1uF
C346	168-1042-78	0.1uF
C401	168-1042-78	0.1uF
C402	168-1042-78	0.1uF
C403	168-1042-78	0.1uF
C404	168-1042-78	0.1uF
C405	168-1042-78	0.1uF
C406	168-1042-78	0.1uF
C407	168-1042-78	0.1uF
C408	168-1042-78	0.1uF
C409	168-1042-78	0.1uF
C410	168-1042-78	0.1uF
C411	168-1042-78	0.1uF
C412	168-1042-78	0.1uF
C414	166-1007-50	10pF
C502	168-1042-78	0.1uF
C503	168-1042-78	0.1uF
C504	168-1042-78	0.1uF
C506	168-1042-78	0.1uF
C509	168-1042-78	0.1uF
C510	042-0636-50	6.3V100uF
C511	042-0636-51	16V47uF
C512	042-0636-50	6.3V100uF
C513	042-0636-50	6.3V100uF
C515	042-0636-50	6.3V100uF
C516	042-0636-50	6.3V100uF
C517	168-1032-55	0.01uF
C518	168-2722-55	2700pF
CCT501	050-0122-60	33 ohmx4
CCT502	050-0122-60	33 ohmx4
CCT503	050-0122-60	33 ohmx4
CCT504	050-0122-60	33 ohmx4
CCT505	050-0122-57	100 ohmx4
D101	001-0367-91	1SS226
D102	001-0367-91	1SS226
D201	001-7057-90	AN1105W-TR
D202	001-7057-90	AN1105W-TR
D301	001-0356-96	1SS181
IC101	051-5705-00	TA1254AF
IC102	051-3014-90	NJM2115M
IC201	051-6058-08	BA6859AFP
IC202	051-6041-08	BA5937FP
IC301	051-6351-00	TC9453F
IC302	051-9315-00	MSM514265C-50TS
IC401	051-9315-00	MSM514265C-50TS
IC402	051-6352-00	TC9469BF
IC501	052-5041-51	TMP95CW64F-3UR6(Z)
IC503	051-1738-08	TC7S08F
IC504	051-5419-12	MN1382Q
J101	074-1059-80	30P
J201	074-1201-68	18P
J501	074-1201-68	18P
J504	074-1189-00	50P
L101	010-3050-93	10uH
L102	010-3050-93	10uH
L501	010-2275-52	3.3uH
L502	010-2275-52	3.3uH
Q101	131-1188-50	2SB1188P,Q,R
Q102	131-1188-50	2SB1188P,Q,R
R101	119-1001-15	1/16W 10 ohm
R102	119-1001-15	1/16W 10 ohm
R103	119-1021-15	1/16W 1k ohm
R104	119-1021-15	1/16W 1k ohm

REF No.	PART No.	DESCRIPTION
R105	119-5601-15	1/16W 56 ohm
R106	119-5601-15	1/16W 56 ohm
R107	119-3331-15	1/16W 33k ohm
R108	119-3331-15	1/16W 33k ohm
R109	119-2731-15	1/16W 27k ohm
R110	119-1041-15	1/16W 100k ohm
R112	119-1041-15	1/16W 100k ohm
R113	119-1031-15	1/16W 10k ohm
R201	119-1021-15	1/16W 1k ohm
R202	119-1021-15	1/16W 1k ohm
R203	119-8201-15	1/16W 82 ohm
R204	119-8201-15	1/16W 82 ohm
R205	119-1031-15	1/16W 10k ohm
R206	119-1031-15	1/16W 10k ohm
R208	032-0104-70	1/4W 1 ohm
R209	032-0104-70	1/4W 1 ohm
R210	119-2221-15	1/16W 2.2k ohm
R211	119-3321-15	1/16W 3.3k ohm
R303	119-4731-15	1/16W 47k ohm
R304	119-1031-15	1/16W 10k ohm
R305	119-1031-15	1/16W 10k ohm
R307	119-1031-15	1/16W 10k ohm
R308	119-1031-15	1/16W 10k ohm
R309	119-4731-15	1/16W 47k ohm
R310	119-5621-15	1/16W 5.6k ohm
R311	119-1031-15	1/16W 10k ohm
R312	119-1031-15	1/16W 10k ohm
R313	119-1031-15	1/16W 10k ohm
R314	119-1031-15	1/16W 10k ohm
R315	119-1031-15	1/16W 10k ohm
R316	119-1031-15	1/16W 10k ohm
R317	119-1041-15	1/16W 100k ohm
R318	119-2211-15	1/16W 220 ohm
R319	119-5621-15	1/16W 5.6k ohm
R320	119-0000-05	1/16W 0 ohm
R321	119-5631-15	1/16W 56k ohm
R322	119-1021-15	1/16W 1k ohm
R323	119-2731-15	1/16W 27k ohm
R324	119-1021-15	1/16W 1k ohm
R325	119-5631-15	1/16W 56k ohm
R326	119-1021-15	1/16W 1k ohm
R327	119-2731-15	1/16W 27k ohm
R328	119-1021-15	1/16W 1k ohm
R329	119-2211-15	1/16W 220 ohm
R331	119-2211-15	1/16W 220 ohm
R332	119-1541-15	1/16W 150k ohm
R333	119-1541-15	1/16W 150k ohm
R335	119-1031-15	1/16W 10k ohm
R336	119-1031-15	1/16W 10k ohm
R337	119-1051-15	1/16W 1M ohm
R338	119-3311-15	1/16W 330 ohm
R339	119-1031-15	1/16W 10k ohm
R340	119-1031-15	1/16W 10k ohm
R341	119-4741-15	1/16W 470k ohm
R342	119-4721-15	1/16W 4.7k ohm
R343	119-1031-15	1/16W 10k ohm
R344	119-5631-15	1/16W 56k ohm
R345	119-1531-15	1/16W 15k ohm
R346	119-4731-15	1/16W 47k ohm
R347	119-3321-15	1/16W 3.3k ohm
R403	119-1031-15	1/16W 10k ohm
R404	119-4731-15	1/16W 47k ohm
R405	119-0000-05	1/16W 0 ohm
R501	119-3331-15	1/16W 33k ohm
R504	119-1041-15	1/16W 100k ohm
R505	119-4731-15	1/16W 47k ohm
R506	119-4731-15	1/16W 47k ohm
R507	119-2231-15	1/16W 22k ohm
R508	119-2231-15	1/16W 22k ohm
R509	119-1041-15	1/16W 100k ohm
R512	119-4721-15	1/16W 4.7k ohm
R513	119-4721-15	1/16W 4.7k ohm
R514	119-4731-15	1/16W 47k ohm

REF No.	PART No.	DESCRIPTION
C549	168-1042-78	16V0.1uF
C556	178-1052-78	1uF
C557	178-1052-78	1uF
C558	163-1063-35	16V10uF
C559	178-1052-78	1uF
C560	163-2263-15	6.3V22uF
C562	168-1042-78	16V0.1uF
C564	168-1042-78	16V0.1uF
C566	168-1032-55	0.01uF
C567	168-1032-55	0.01uF
C571	184-1083-12	6.3V1000uF
C572	163-4763-15	6.3V47uF
C574	166-3096-50	3pF CJ
C575	163-4763-15	6.3V47uF
C576	168-1042-78	16V0.1uF
C577	163-1073-35	16V100uF
C578	184-1083-12	6.3V1000uF
C601	163-1063-35	16V10uF
C602	168-1042-78	16V0.1uF
C604	042-0416-57	10V47uF
C605	043-0506-50	0.1uF
C606	168-1042-78	16V0.1uF
C607	043-0506-50	0.1uF
C609	042-0559-00	5.5V0.1uF
C610	168-1042-78	16V0.1uF
C611	168-1022-55	1000pF
C613	168-1042-78	16V0.1uF
C614	042-0595-84	10V100uF
C615	163-4763-35	16V47uF
C616	168-1022-55	1000pF
C617	168-1032-55	0.01uF
C618	168-1042-78	16V0.1uF
C619	168-1042-78	16V0.1uF
C620	168-2245-79	0.22uF
C621	168-1042-78	16V0.1uF
C622	168-1042-78	16V0.1uF
C623	168-1032-55	0.01uF
C624	168-1042-78	16V0.1uF
C625	163-1063-35	16V10uF
C626	163-1063-35	16V10uF
C627	168-1022-55	1000pF
C630	168-4732-78	0.047uF
C633	163-4753-55	35V4.7uF
C634	168-4732-78	0.047uF
C635	168-1032-55	0.01uF
C1001	168-1042-78	16V0.1uF
C1002	163-1053-65	50V1uF
C1003	163-1063-35	16V10uF
C1004	163-1053-65	50V1uF
C1005	042-0592-58	16V10uF
C1006	042-0592-58	16V10uF
C1007	042-0592-58	16V10uF
C1008	042-0592-58	16V10uF
C1009	168-1042-78	16V0.1uF
C1010	042-0592-58	16V10uF
C1011	042-0592-58	16V10uF
C1012	042-0592-58	16V10uF
C1013	042-0592-58	16V10uF
C1014	042-0592-58	16V10uF
C1015	042-0592-58	16V10uF
C1016	166-3301-50	33pF CH
C1017	166-3301-50	33pF CH
C1018	163-4763-35	16V47uF
C1019	042-0416-57	10V47uF
C1020	168-1042-78	16V0.1uF
C1021	166-1511-50	150pF CH
C1022	166-3301-50	33pF CH
C1023	166-3301-50	33pF CH
C1024	166-1511-50	150pF CH
C1025	163-1063-35	16V10uF
C1026	168-1042-78	16V0.1uF
C1027	166-1011-50	100pF CH
C1028	166-1011-50	100pF CH
C1029	042-0474-92	50V1uF NP
C1030	042-0474-92	50V1uF NP

REF No.	PART No.	DESCRIPTION
C1031	042-0474-90	16V10uF
C1032	042-0474-90	16V10uF
C1033	178-3342-78	0.33uF
C1034	166-1011-50	100pF CH
C1035	166-1011-50	100pF CH
C1036	043-0506-50	0.1uF
C1037	163-1063-35	16V10uF
C1038	168-1042-78	16V0.1uF
C1039	163-1063-35	16V10uF
C1040	168-1042-78	16V0.1uF
C1041	163-4763-15	6.3V47uF
C1042	163-2263-35	16V22uF
C1043	168-1042-78	16V0.1uF
C1044	163-1063-35	16V10uF
C1045	042-0592-58	16V10uF
C1046	042-0592-58	16V10uF
C1047	168-1042-78	16V0.1uF
C1048	168-1042-78	16V0.1uF
C1049	042-0474-90	16V10uF
C1050	042-0474-90	16V10uF
C1051	163-1063-35	16V10uF
C1052	168-1042-78	16V0.1uF
C1053	042-0595-84	10V100uF
C1054	168-1042-78	16V0.1uF
C1055	163-1063-35	16V10uF
C1056	168-1042-78	16V0.1uF
C1057	042-0595-84	10V100uF
C1058	163-2263-35	16V22uF
C1059	168-4732-78	0.047uF
C1060	168-1042-78	16V0.1uF
C1061	042-0592-58	16V10uF
C1062	042-0592-58	16V10uF
C1063	042-0592-58	16V10uF
C1064	042-0592-58	16V10uF
C1065	042-0592-58	16V10uF
C1066	042-0592-58	16V10uF
C1067	168-1042-78	16V0.1uF
C1068	168-1042-78	16V0.1uF
C1069	042-0592-58	16V10uF
C1070	168-1042-78	16V0.1uF
C1071	042-0592-58	16V10uF
C1072	042-0592-58	16V10uF
C1073	042-0592-58	16V10uF
C1078	163-2273-25	10V220uF
C1080	163-2273-25	10V220uF
C1081	042-0592-74	50V2.2uF
C1082	042-0592-61	16V47uF
C1083	042-0592-74	50V2.2uF
C1084	042-0592-58	16V10uF
C1085	042-0592-61	16V47uF
C1086	042-0592-58	16V10uF
C1087	042-0592-58	16V10uF
C1088	042-0592-61	16V47uF
C1089	042-0592-58	16V10uF
C1096	042-0595-84	10V100uF
C1097	042-0595-84	10V100uF
C1098	042-0595-84	10V100uF
C1099	042-0595-84	10V100uF
C1100	042-0595-84	10V100uF
C1101	042-0595-84	10V100uF
C1102	042-0592-50	6.3V22uF
C1103	042-0592-50	6.3V22uF
C1104	042-0592-50	6.3V22uF
C1105	042-0592-50	6.3V22uF
C1106	042-0592-50	6.3V22uF
C1107	042-0592-50	6.3V22uF
C1108	168-1522-55	1500pF
C1109	168-1522-55	1500pF
C1110	168-1522-55	1500pF
C1111	168-1522-55	1500pF
C1112	168-1522-55	1500pF
C1113	168-1522-55	1500pF
C1115	163-1053-65	50V1uF
C1118	043-0506-50	0.1uF
C1121	168-4732-78	0.047uF

REF No.	PART No.	DESCRIPTION
C1122	168-4732-78	0.047uF
C1123	043-0506-50	0.1uF
C1124	043-0506-52	0.47uF
C1125	043-0506-52	0.47uF
C1126	043-0506-52	0.47uF
C1127	043-0506-52	0.47uF
C1128	163-4763-35	16V47uF
C1133	163-2263-35	16V22uF
C1134	043-0506-50	0.1uF
C1135	043-0506-50	0.1uF
C1136	163-3353-65	50V3.3uF
C1137	042-0592-58	16V10uF
C1138	042-0592-58	16V10uF
C1139	042-0592-58	16V10uF
C1140	042-0592-58	16V10uF
C1141	042-0592-58	16V10uF
C1142	042-0592-58	16V10uF
C1143	042-0592-58	16V10uF
C1144	042-0592-58	16V10uF
C1145	163-1063-35	16V10uF
C1146	163-1053-65	50V1uF
C1147	168-1032-55	0.01uF
C1148	166-8201-50	82pF CH
C1149	163-1063-35	16V10uF
C1150	168-1042-78	16V0.1uF
C1151	184-4783-32	16V4700uF
C1152	172-2231-11	0.022uF
C1153	184-2283-32	16V2200uF
C1154	172-1041-11	0.1uF
C1155	168-1042-78	16V0.1uF
C1156	168-1042-78	16V0.1uF
C1157	168-1042-78	16V0.1uF
C1158	168-1042-78	16V0.1uF
C1160	163-1063-35	16V10uF
C1161	163-1063-35	16V10uF
C1162	163-1063-35	16V10uF
C1163	163-1063-35	16V10uF
C1164	166-1511-50	150pF CH
C1165	166-1511-50	150pF CH
C1166	168-1522-55	1500pF
C1167	168-1522-55	1500pF
C1168	168-1522-55	1500pF
C1169	168-1522-55	1500pF
C1170	168-1522-55	1500pF
C1171	168-1522-55	1500pF
C1172	166-4701-50	47pF CH
C1173	166-4701-50	47pF CH
C1174	166-4701-50	47pF CH
C1175	166-4701-50	47pF CH
C1176	166-4701-50	47pF CH
C1177	166-4701-50	47pF CH
C1178	043-0506-50	0.1uF
C1179	166-1511-50	150pF CH
C1180	166-1511-50	150pF CH
C1181	166-1511-50	150pF CH
C1182	166-1511-50	150pF CH
C1183	166-1511-50	150pF CH
C1184	166-1511-50	150pF CH
C1185	166-1511-50	150pF CH
C1186	166-1511-50	150pF CH
CCT601	050-0122-53	1/16W 1k ohmx4 J
CCT602	050-0122-53	1/16W 1k ohmx4 J
CCT603	050-0122-53	1/16W 1k ohmx4 J
CCT604	050-0122-53	1/16W 1k ohmx4 J
CCT606	050-0122-53	1/16W 1k ohmx4 J
CCT607	050-0122-51	1/16W 47k ohmx4 J
CCT608	050-0122-53	1/16W 1k ohmx4 J
D501	001-0367-91	1SS226
D502	001-0367-91	1SS226
D503	001-0367-91	1SS226
D504	001-0367-91	1SS226
D505	001-0367-91	1SS226
D506	001-0367-91	1SS226
D509	001-0367-91	1SS226

REF No.	PART No.	DESCRIPTION
R515	119-1041-15	1/16W 100k ohm
R516	119-1031-15	1/16W 10k ohm
R517	119-1031-15	1/16W 10k ohm
R518	119-1031-15	1/16W 10k ohm
R519	119-1031-15	1/16W 10k ohm
R520	119-1031-15	1/16W 10k ohm
R521	119-1031-15	1/16W 10k ohm

REF No.	PART No.	DESCRIPTION
R538	119-2201-15	1/16W 22 ohm
R539	119-8201-15	1/16W 82 ohm
R540	119-8201-15	1/16W 82 ohm
R541	119-8201-15	1/16W 82 ohm
R542	119-2201-15	1/16W 22 ohm
R543	119-8201-15	1/16W 82 ohm
R548	119-1041-15	1/16W 100k ohm

REF No.	PART No.	DESCRIPTION
R549	119-1021-15	1/16W 1k ohm
R550	119-1041-15	1/16W 100k ohm
S201	013-7412-50	SPVG210100
X301	060-1524-90	22.57MHz
X401	060-1526-90	50.0MHz
X501	060-1525-90	25.0MHz

ATTENTION ABOUT THE SLIDE MECHANISM

In case that the LCD or the slide mechanism is replaced,the position information of OPE/TILT/CLOSE must be re-memorised in the EEP ROM on the Main PWB.

How to re-memorise

1. Prepare a plate (31.5mm) as follows and fix it on the projections of the LCD panel.

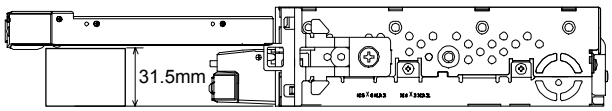

2. Push "ISR" key for more than 2 seconds pressing "MUTE" key.

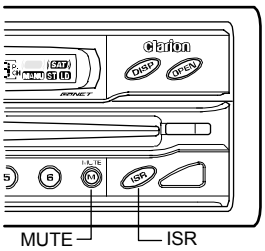

3. Release it after beep sounds.
4. To memorise the positions,OPEN/TILT-UP/TILT-DOWN/CLOSE operations will be done automatically.

* The above procedure must be started from the "CLOSE" position.
If the position is not complete "CLOSE",change the position by the following procedure.

How to change the "CLOSE" position

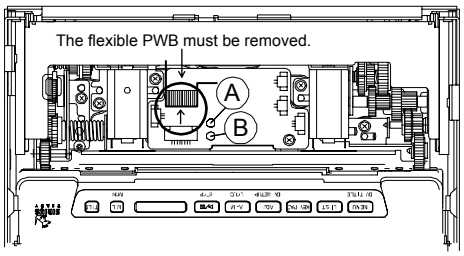

Move the position by adding 6 to 8volts to the motor.Manual adjustment may cause a damage of the gears.The flexible PWB must be removed from the Main PWB.

1. To open the mechanism,connect (A) to (-) and (B) to (+) on the PWB of the slide mechanism.
2. To close the mechanism,connect (A) to (+) and (B) to (-).

CIRCUIT DIAGRAM

Inner switch PWB((B4) section

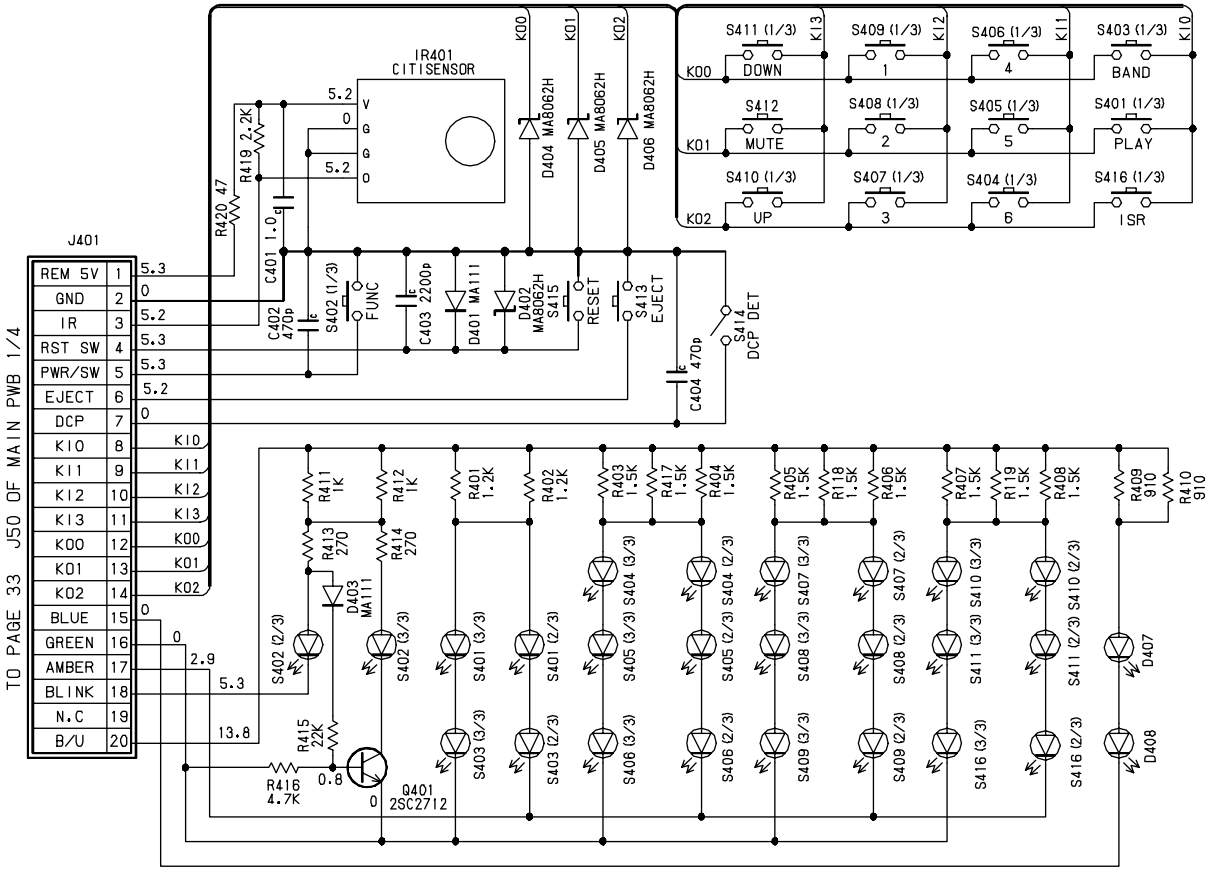

Panel switch PWB(B5) section

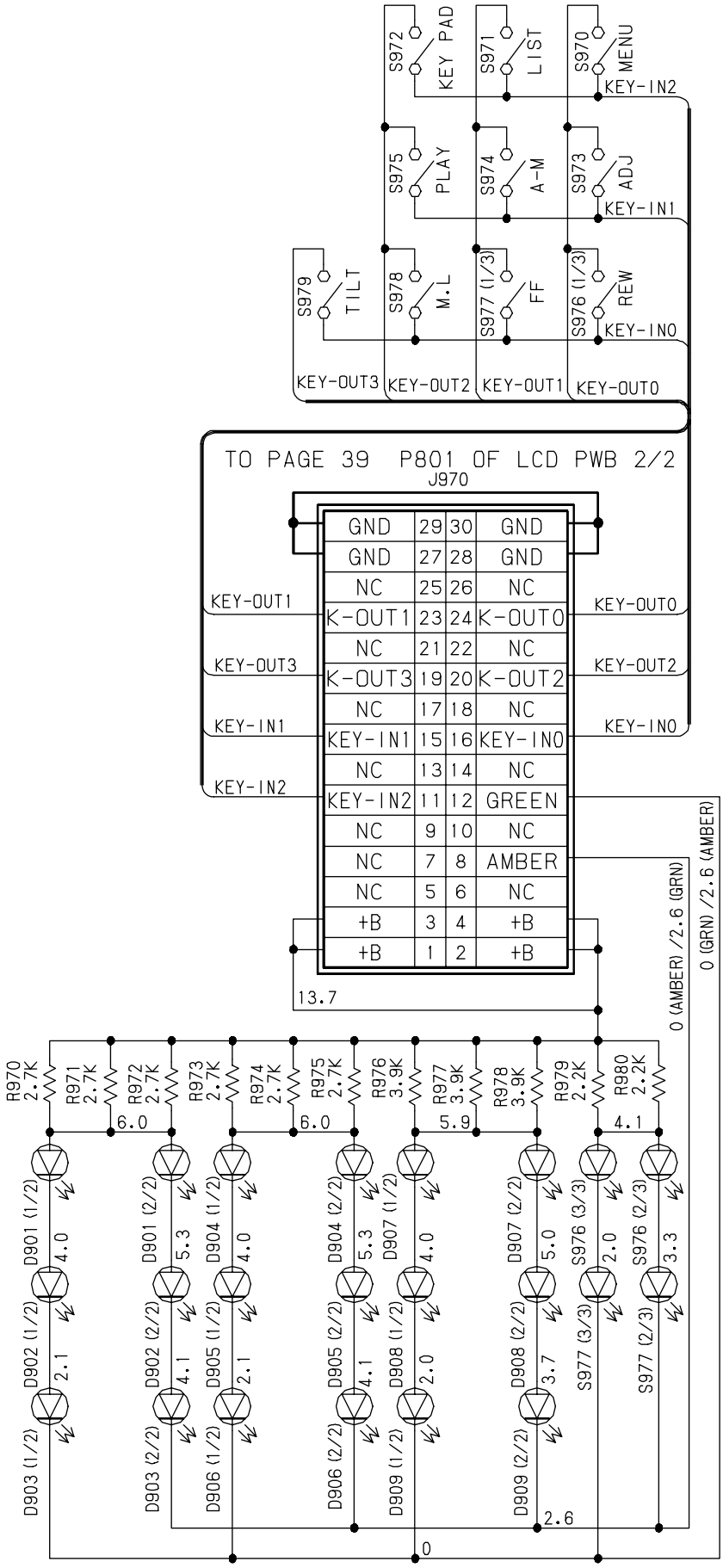

Tuner PWB(B1) section 1/3

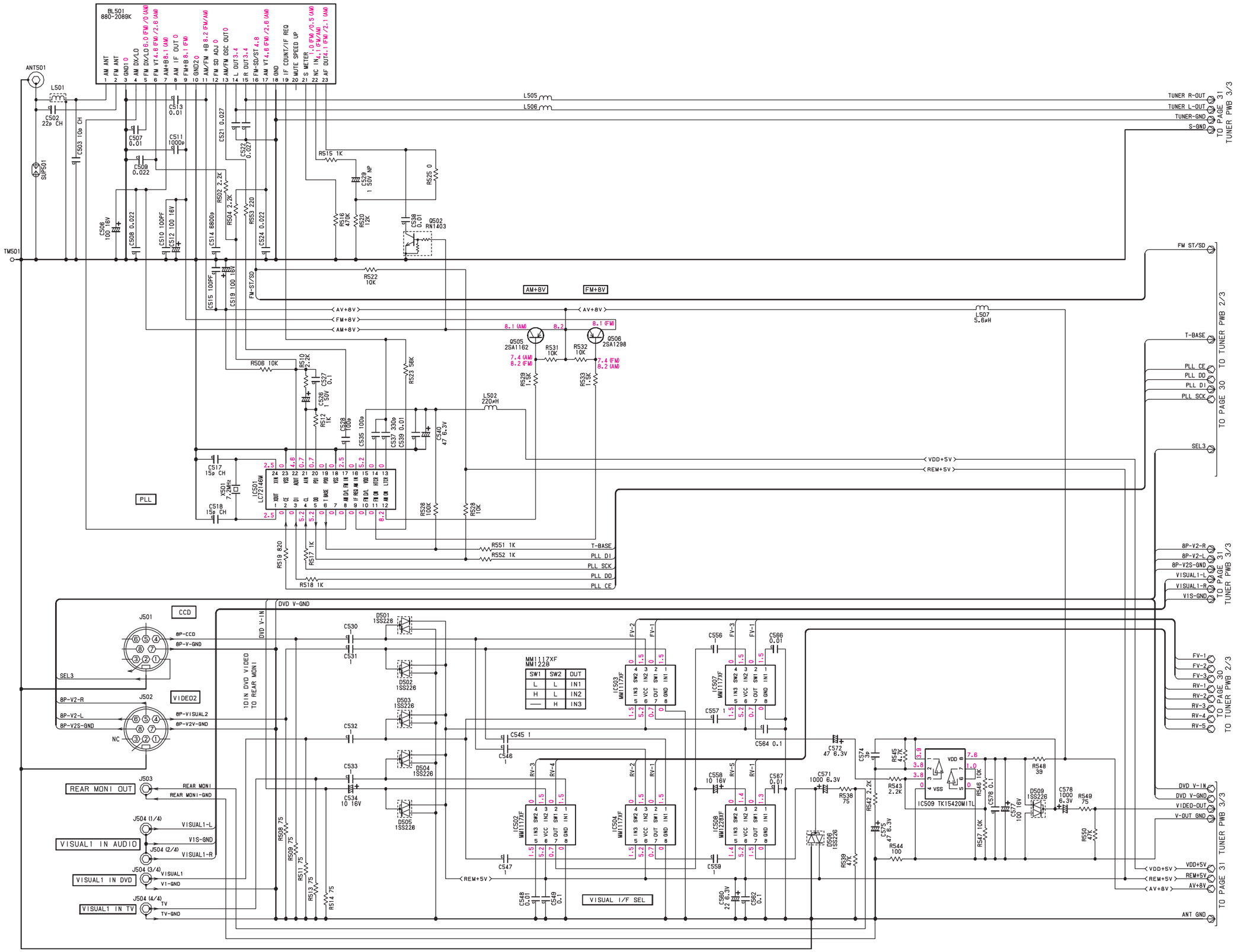

VRX925VD

Tuner PWB(B1) section 2/3

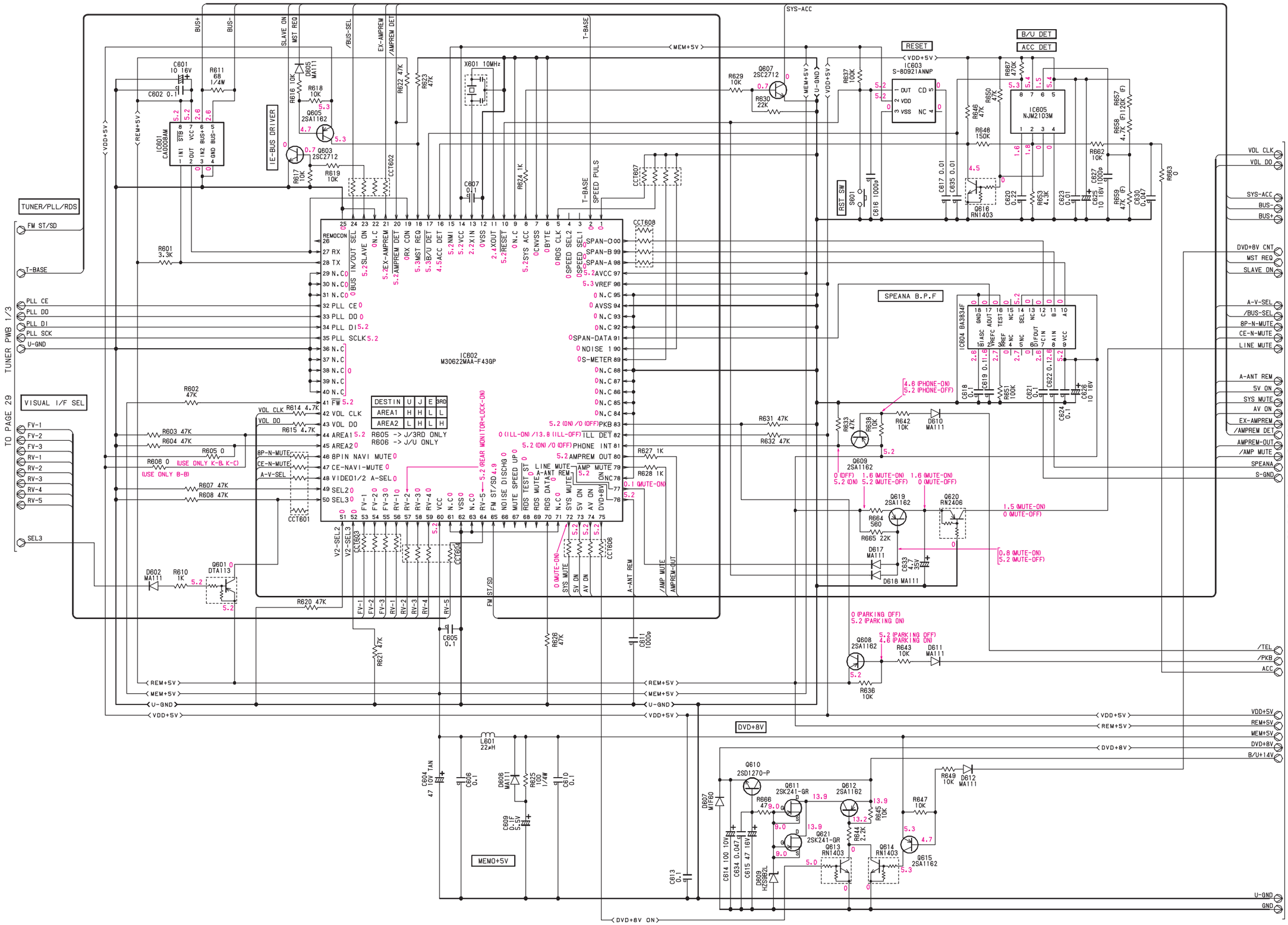

VRX925VD

Tuner PWB(B1) section 3/3

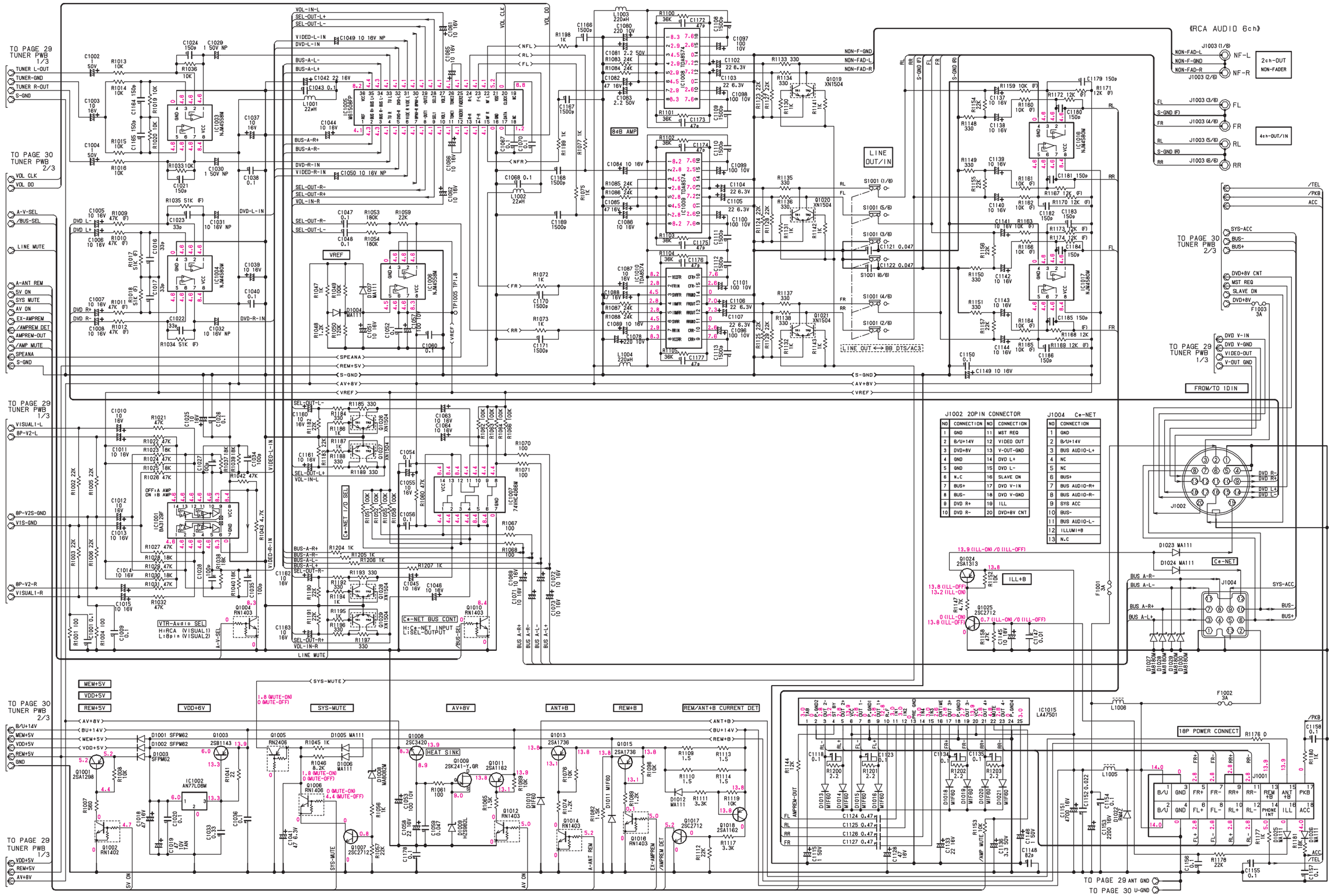

J1002 20PIN CONNECTOR			
NO	CONNECTION	NO	CONNECTION
1	GND	11	MST REQ
2	B/U+14V	12	VIDEO OUT
3	DVD+8V	13	V-OUT-GND
4	GND	14	DVD L+
5	GND	15	DVD L-
6	N.C	16	SLAVE ON
7	BUS+	17	DVD V-IN
8	BUS-	18	DVD V-GND
9	DVD R+	19	ILL
10	DVD R-	20	DVD+8V CNT

J1004 Ce-NET	
NO	CONNECTION
1	GND
2	B/U+14V
3	BUS AUDIO-L+
4	NC
5	NC
6	BUS+
7	BUS AUDIO-R+
8	BUS AUDIO-R-
9	SYS ACC
10	BUS-
11	BUS AUDIO-L-
12	ILLUMI+B
13	N.C

PRINTED WIRING BOARD

Tuner PWB(B1) section

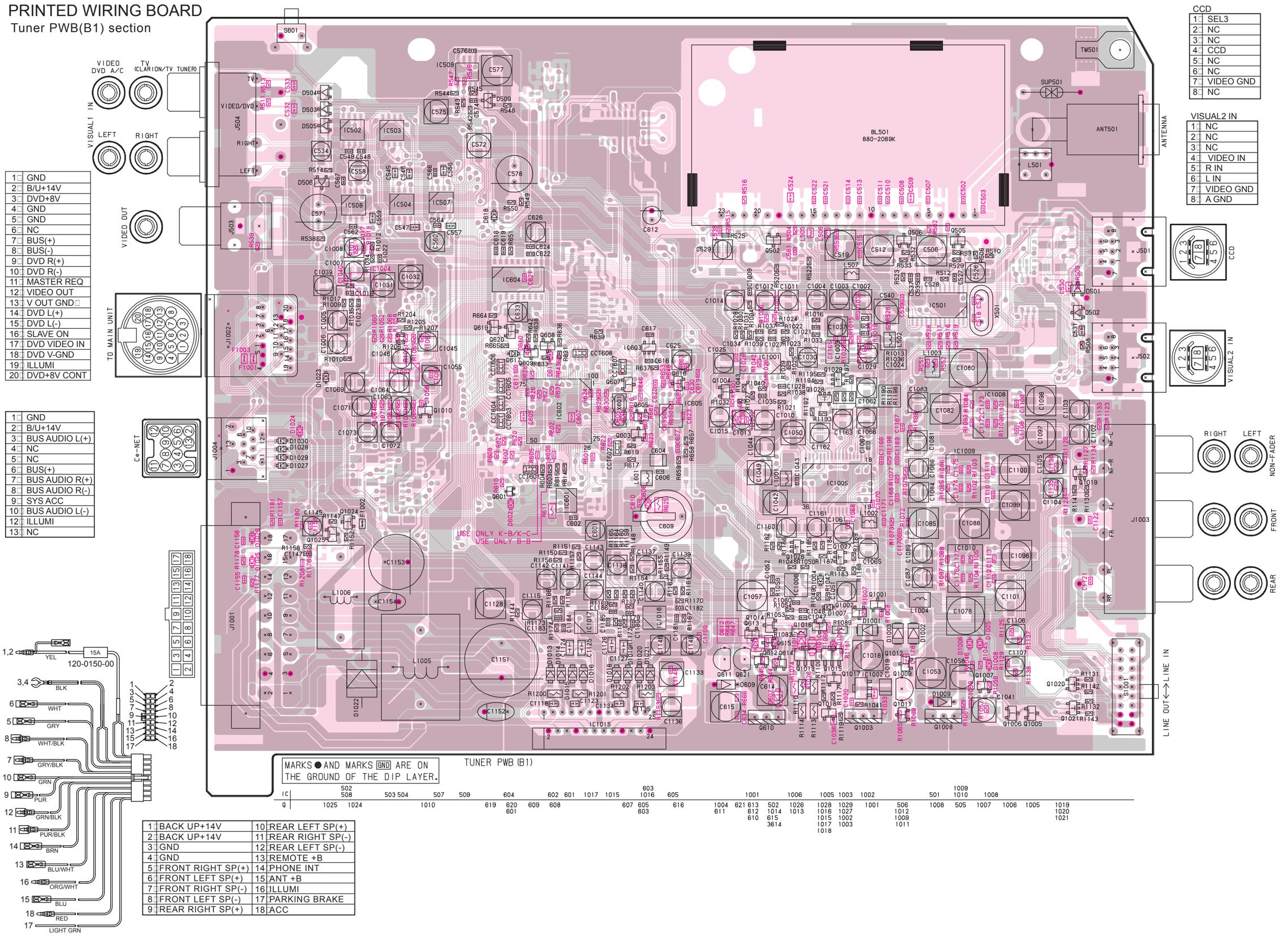

1	GND
2	B/U+14V
3	DVD+8V
4	GND
5	GND
6	NC
7	BUS(+)
8	BUS(-)
9	DVD R(+)
10	DVD R(-)
11	MASTER REQ
12	VIDEO OUT
13	V OUT GND
14	DVD L(+)
15	DVD L(-)
16	SLAVE ON
17	DVD VIDEO IN
18	DVD V-GND
19	ILLUMI
20	DVD+8V CONT

1	GND
2	B/U+14V
3	BUS AUDIO L(+)
4	NC
5	NC
6	BUS(+)
7	BUS AUDIO R(+)
8	BUS AUDIO R(-)
9	SYS ACC
10	BUS AUDIO L(-)
12	ILLUMI
13	NC

1	BACK UP+14V
2	BACK UP+14V
3	GND
4	GND
5	FRONT RIGHT SP(+)
6	FRONT LEFT SP(+)
7	FRONT RIGHT SP(-)
8	FRONT LEFT SP(-)
9	REAR RIGHT SP(+)
10	REAR LEFT SP(+)
11	REAR RIGHT SP(-)
12	REAR LEFT SP(-)
13	REMOTE +B
14	PHONE INT
15	ANT +B
16	ILLUMI
17	PARKING BRAKE
18	ACC

1	SEL3
2	NC
3	NC
4	CCD
5	NC
6	NC
7	VIDEO GND
8	NC

1	NC
2	NC
3	NC
4	VIDEO IN
5	R IN
6	L IN
7	VIDEO GND
8	A GND

MARKS ● AND MARKS GND ARE ON THE GROUND OF THE DIP LAYER.

TUNER PWB (B1)

IC: 502 508 503 504 507 509 604 602 601 1017 1015 603 1016 605 1001 1006 1005 1003 1002 501 1009 1010 1008

Q: 1025 1024 1010 619 620 601 609 608 607 605 603 616 1004 611 621 613 612 610 502 1014 615 3614 1026 1013 1028 1016 1015 1017 1018 1029 1027 1002 1003 1001 506 1012 1009 1011 1008 505 1007 1006 1005 1019 1020 1021

CIRCUIT DIAGRAM
Main PWB(B2) section 1/4

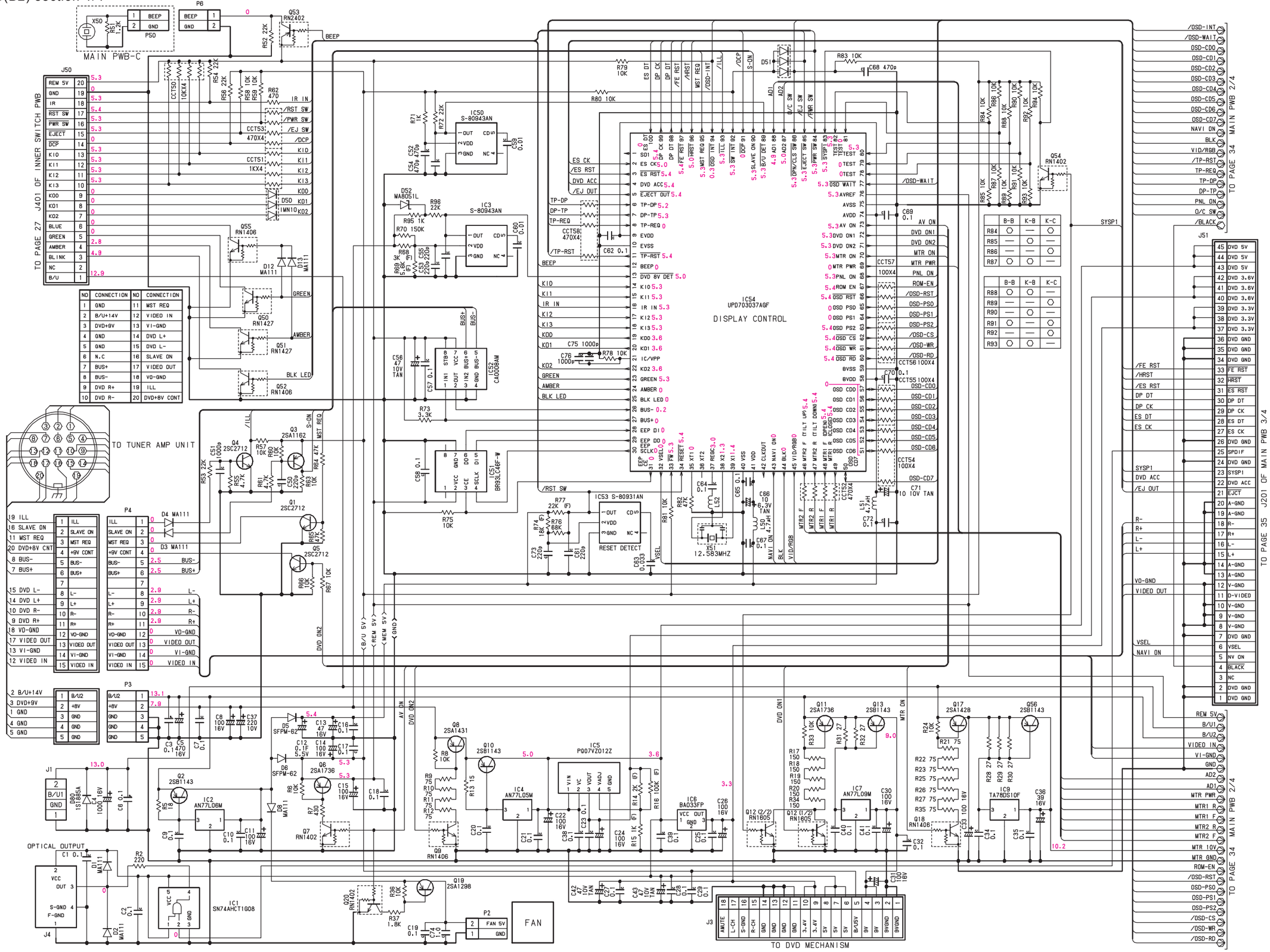

VRX925VD

Main PWB(B2) section 2/4

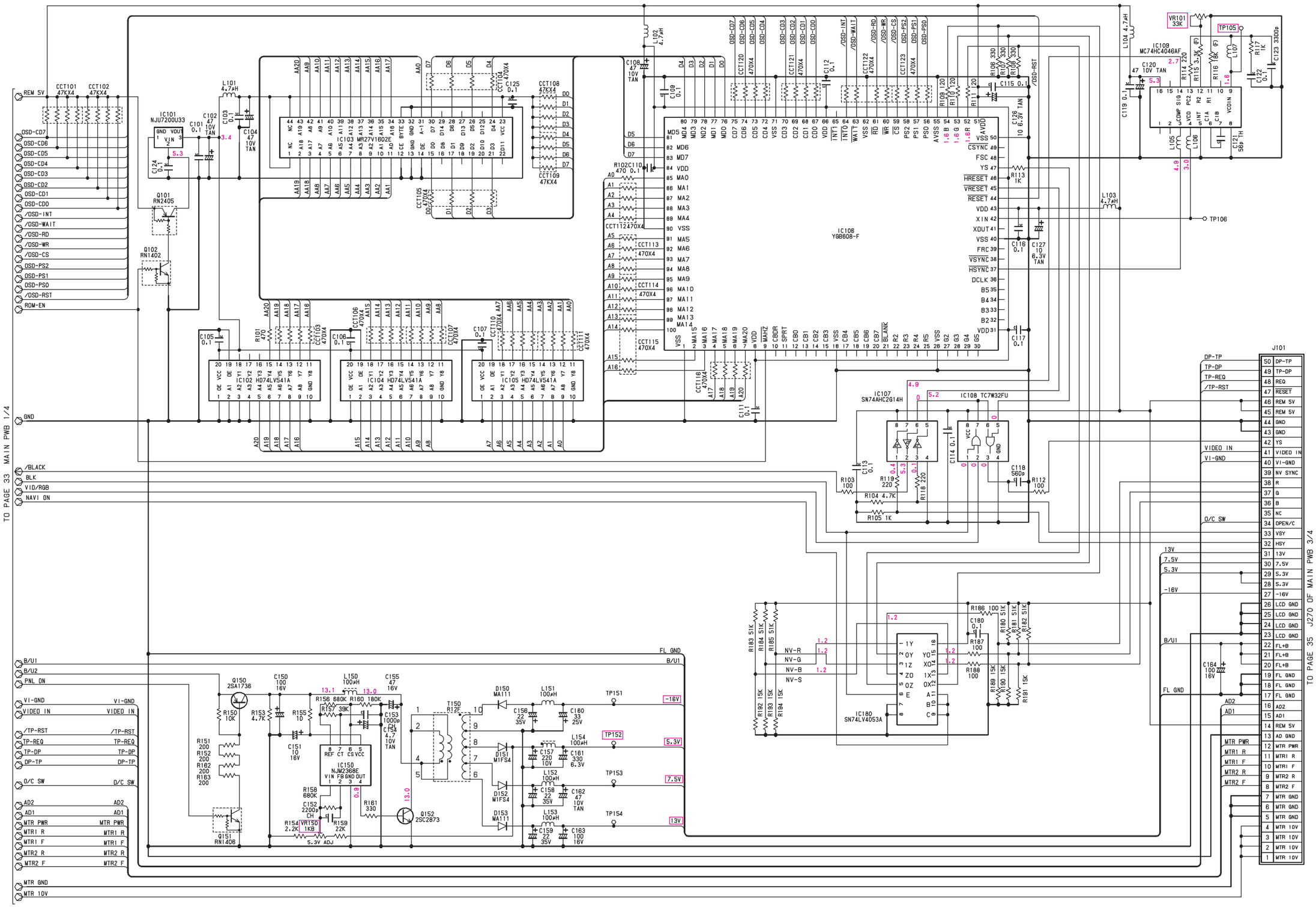

Main PWB(B2) section 3/4

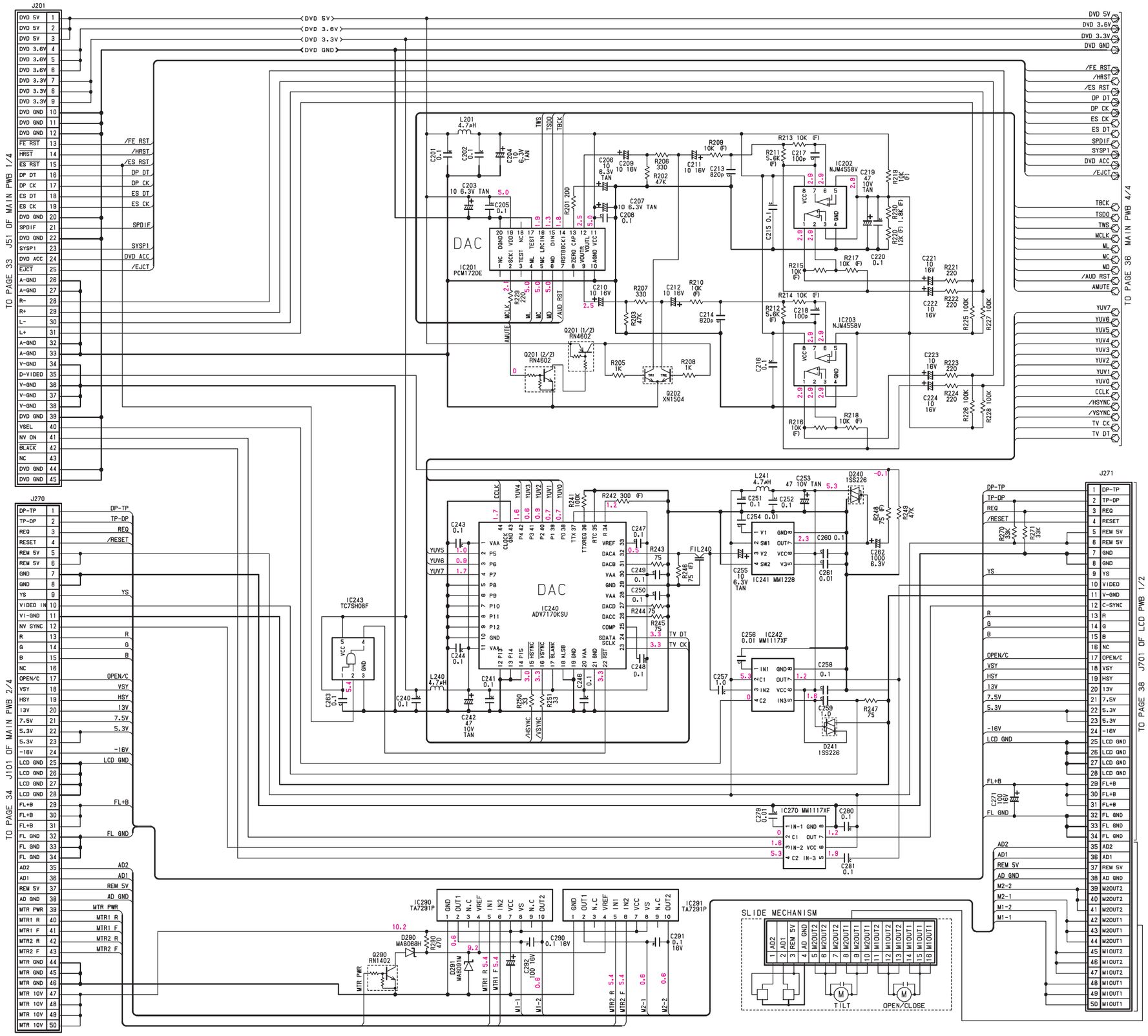

Main PWB(B2) section 4/4

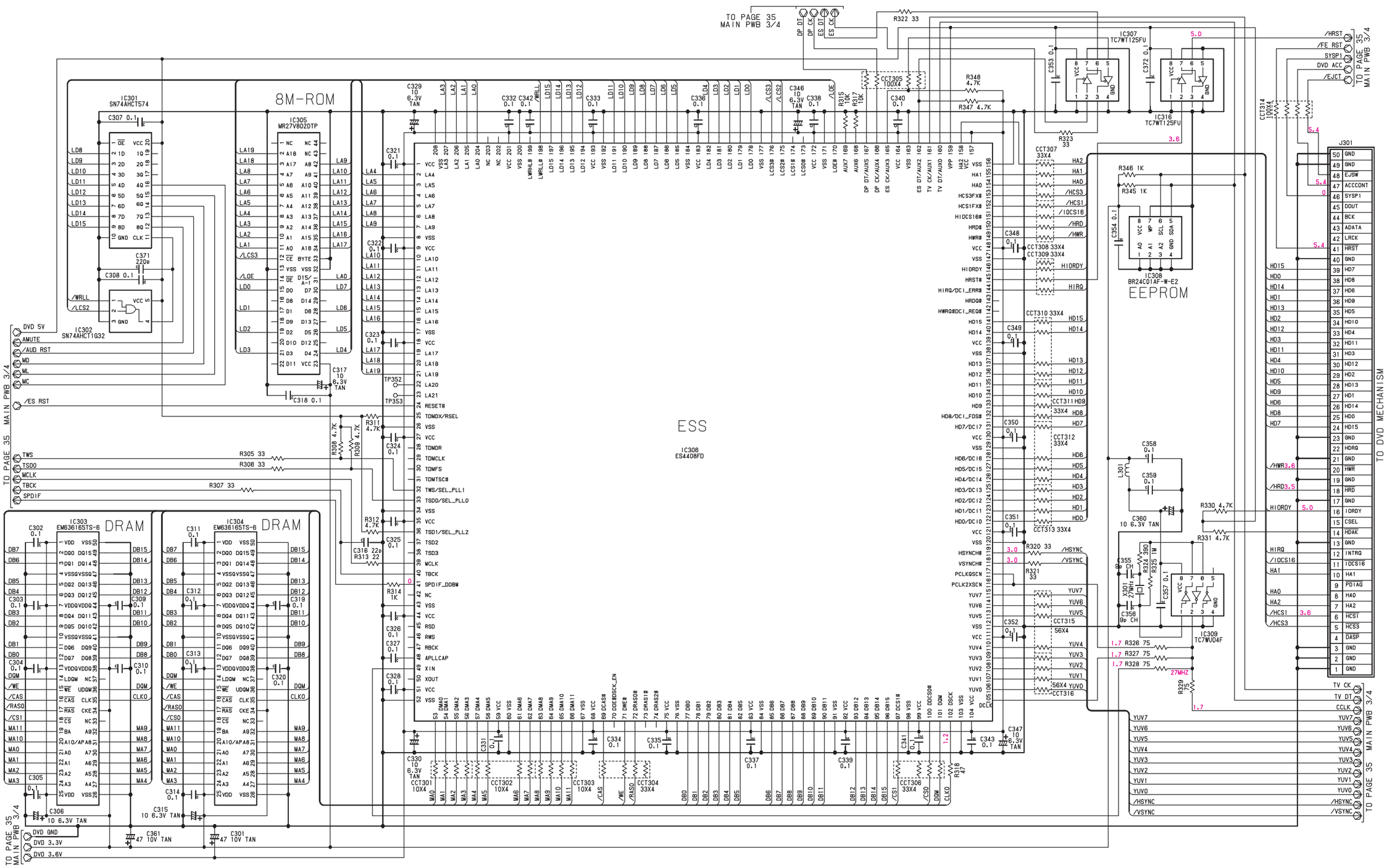

PRINTED WIRING BOARD

Main PWB(B2) / Inner switch PWB(B4) section

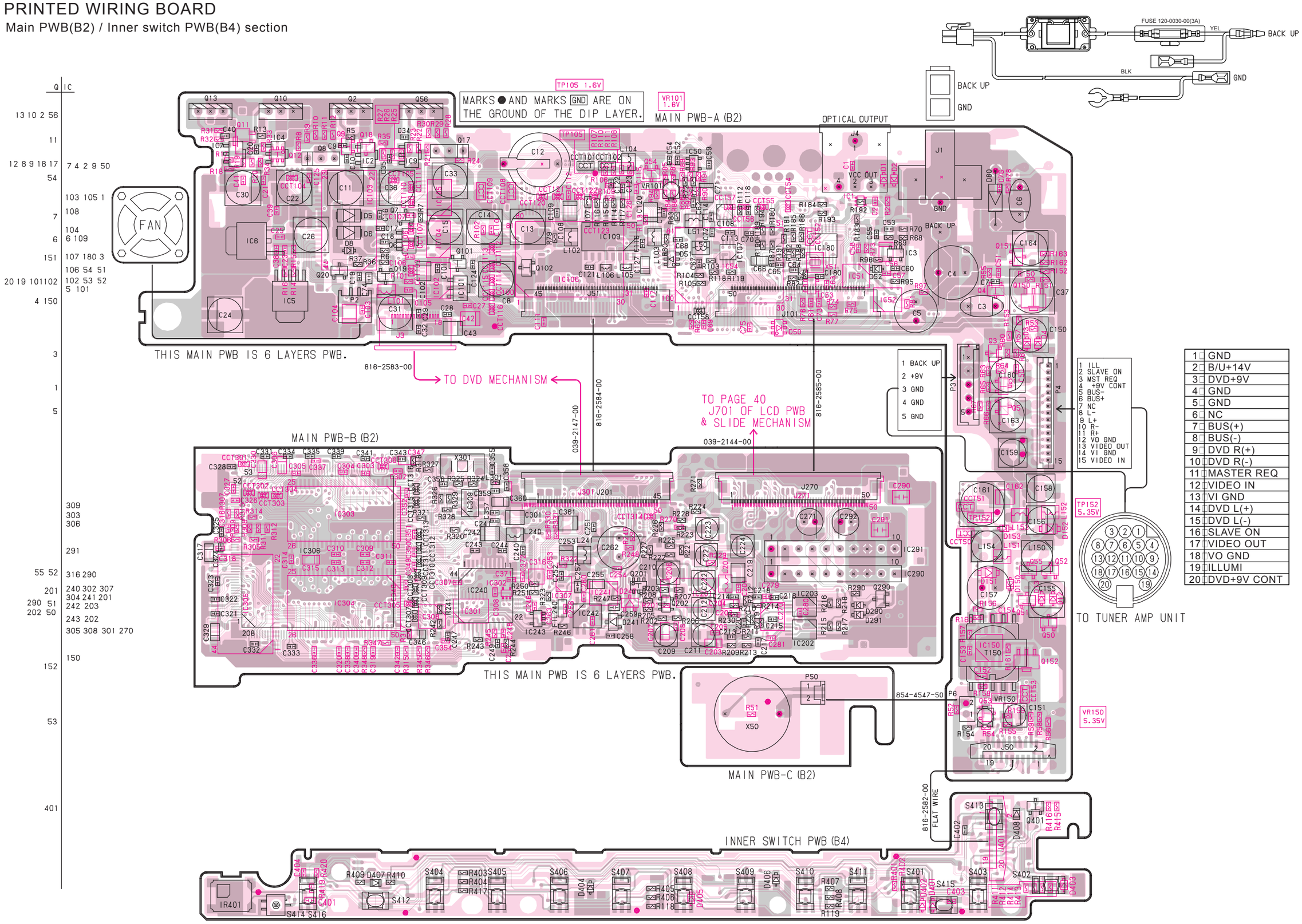

1	GND
2	B/U+14V
3	DVD+9V
4	GND
5	GND
6	NC
7	BUS(+)
8	BUS(-)
9	DVD R(+)
10	DVD R(-)
11	MASTER REQ
12	VIDEO IN
13	VI GND
14	DVD L(+)
15	DVD L(-)
16	SLAVE ON
17	VIDEO OUT
18	VO GND
19	ILLUMI
20	DVD+9V CONT

CIRCUIT DIAGRAM

LCD PWB(B3) section 1/2

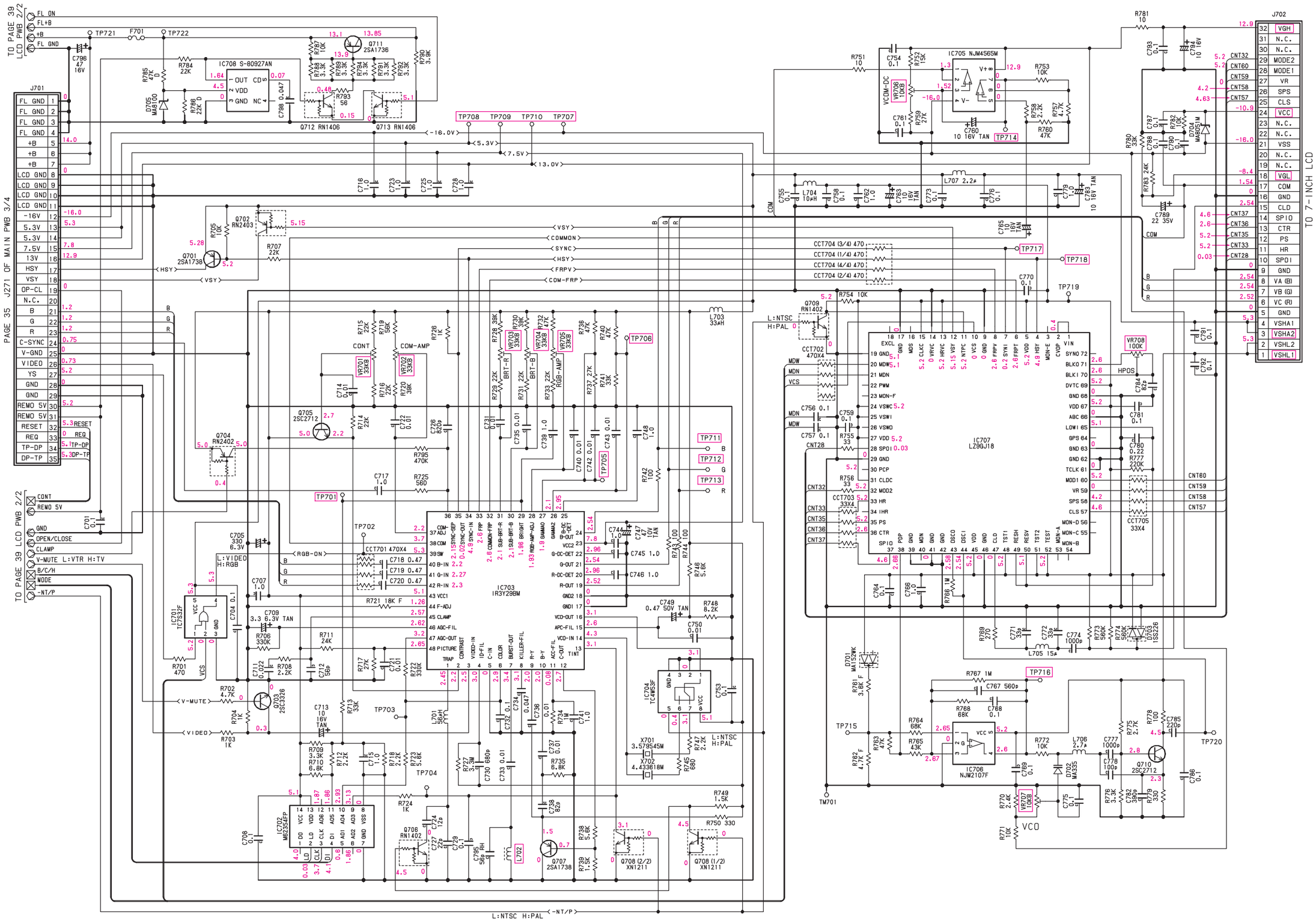

LCD PWB(B3) section 2/2 / Sub LCD PWB(B6) section

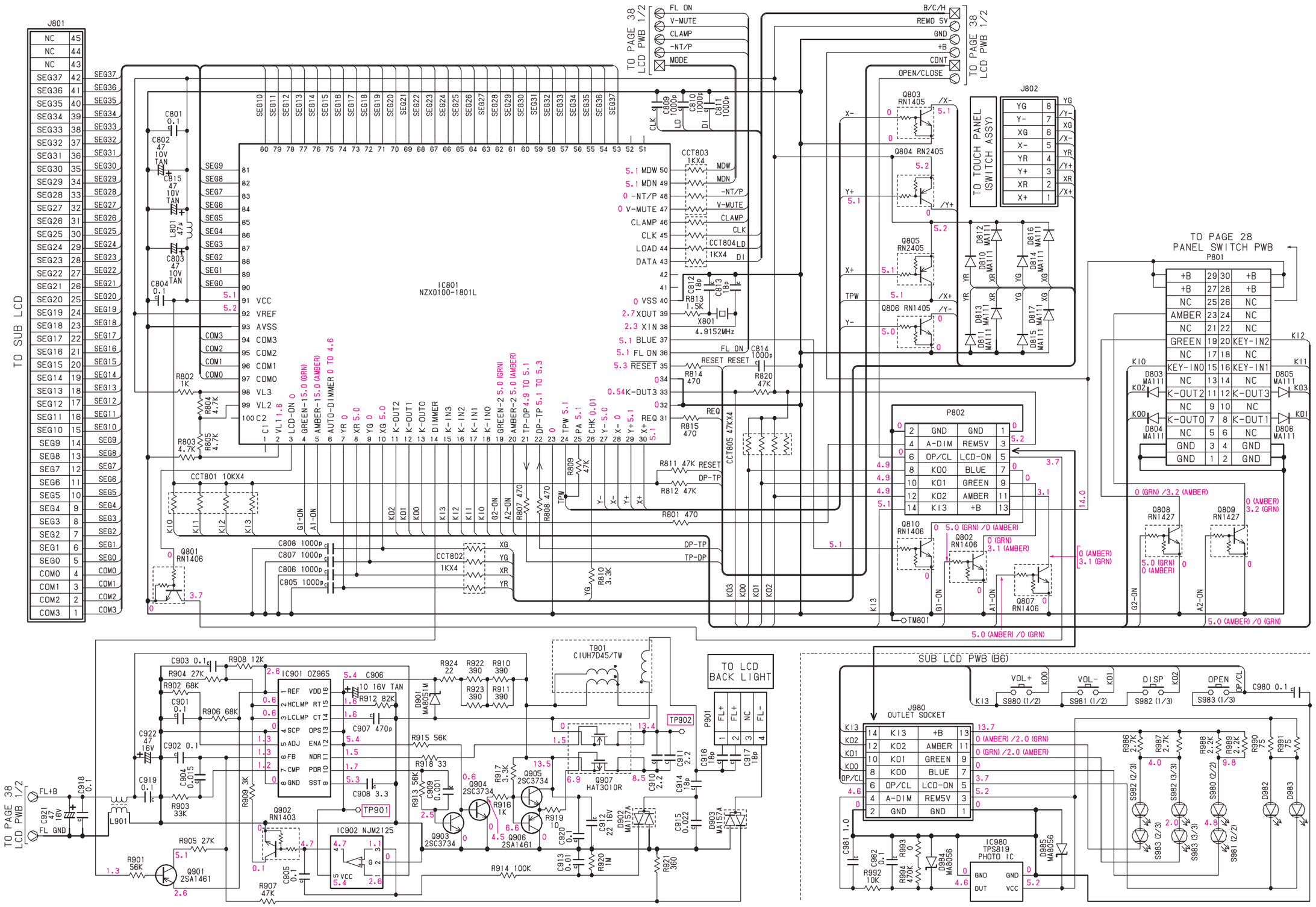

PRINTED WIRING BOARD

LCD PWB(B3) / Panel switch PWB(B5) / Sub LCD PWB(B6) section

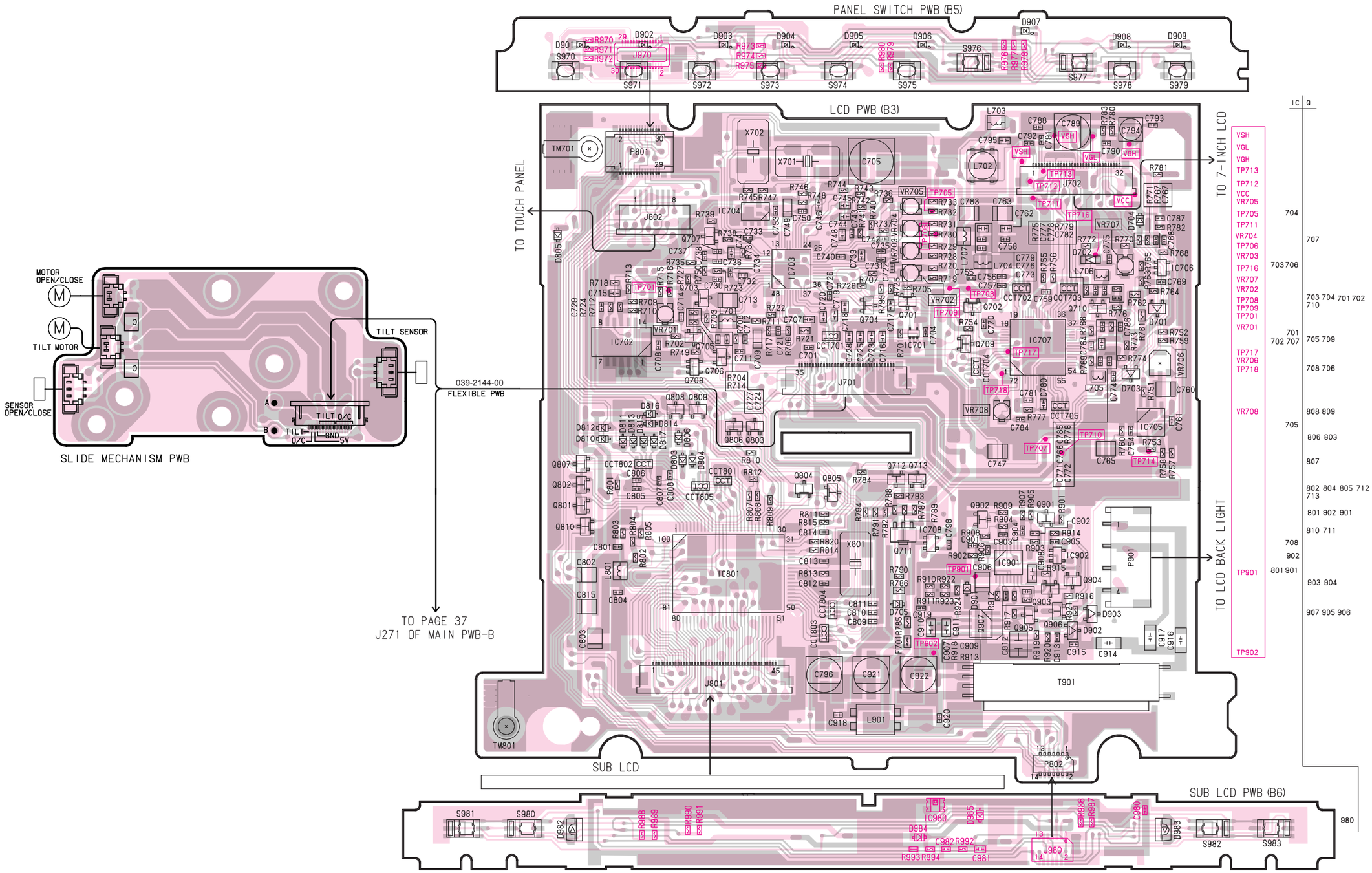

CIRCUIT DIAGRAM

DVD PWB(B7) section 1/2

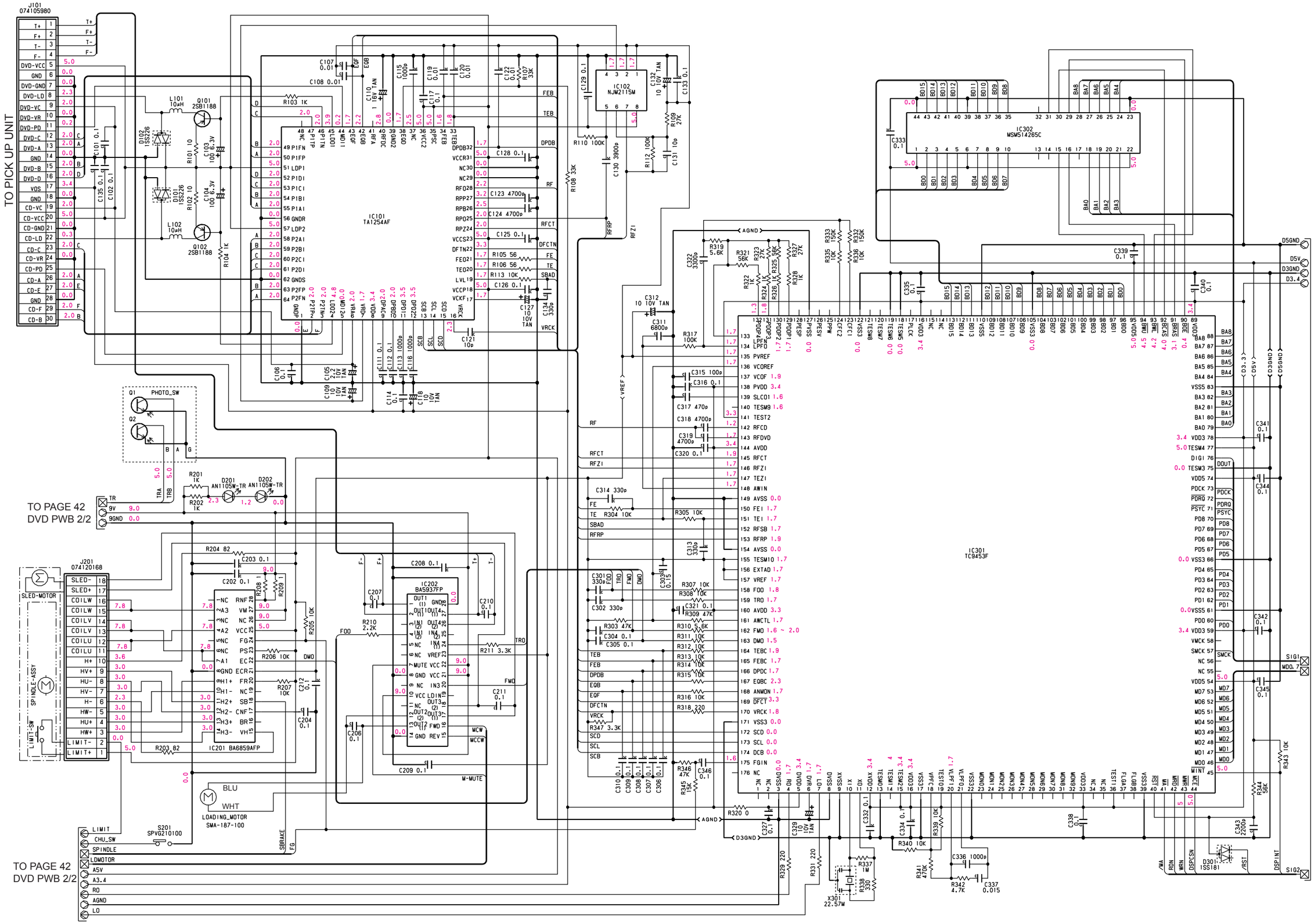

DVD PWB(B7) section 2/2

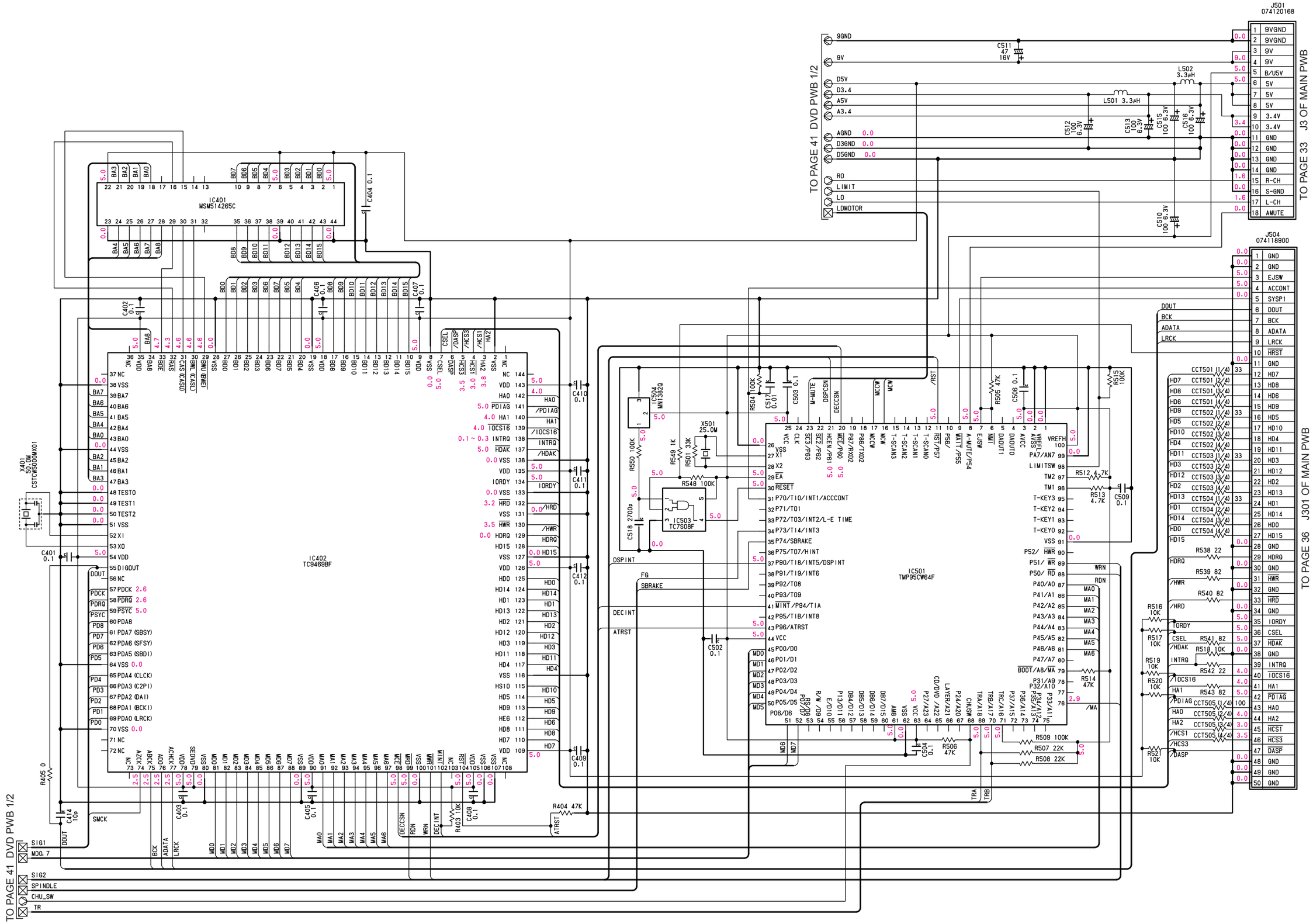

PRINTED WIRING BOARD
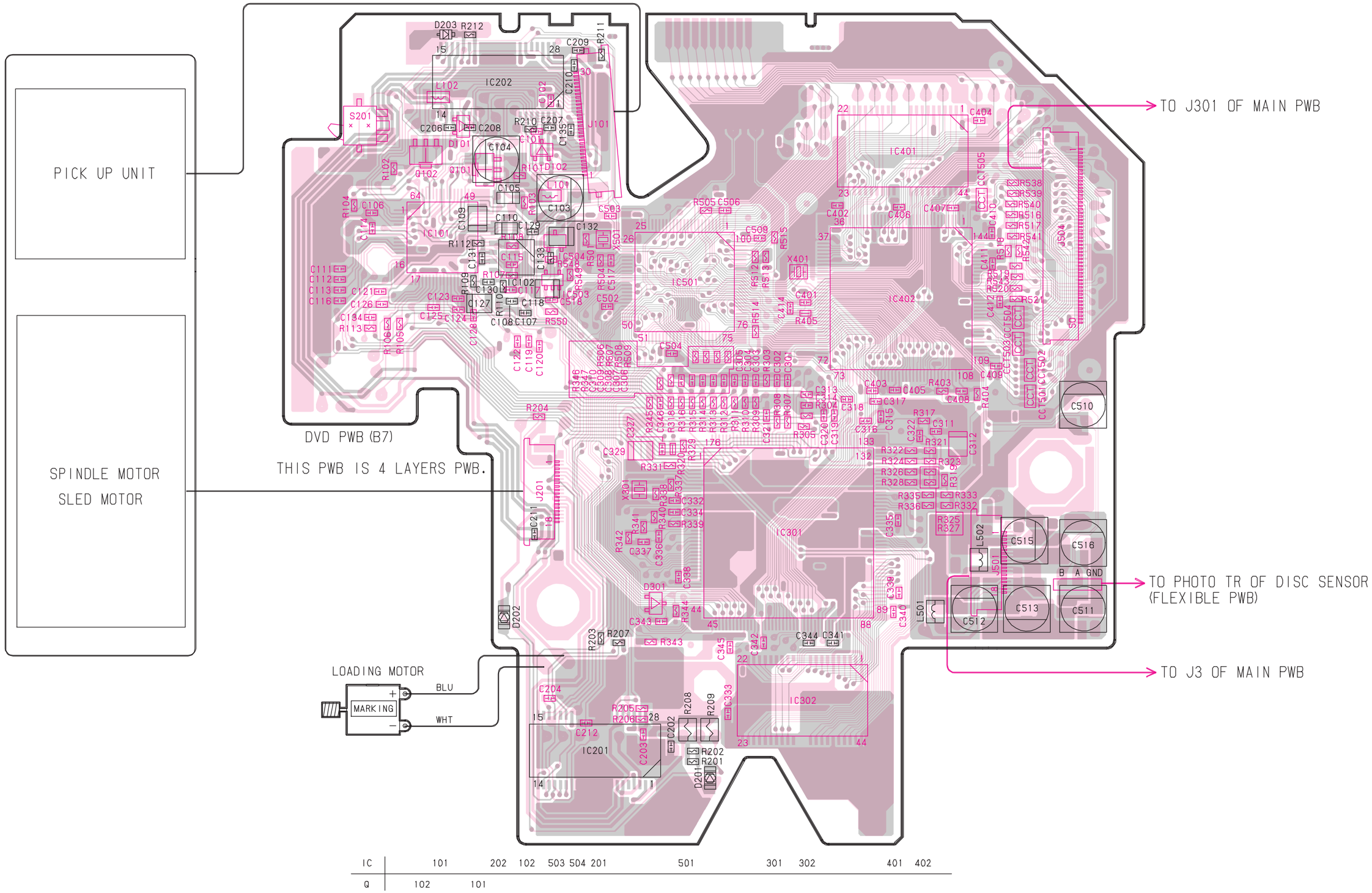
DVD PWB(B7) section